# Appendix S.5 Transportation – Pedestrian Analysis

## A. INTRODUCTION

This appendix provides the technical backup documentation for analysis of on-street pedestrian elements, including sidewalks, corners, and intersection crosswalks. Included are intersection geometry data (sidewalk width, effective sidewalk width, crosswalk width, crosswalk length, and corner radius), pedestrian volumes, and pedestrian levels of service (LOS) summary tables.

1. Pedestrian Geometry Data
2. Pedestrian Volume Tables
3. Pedestrian Analysis – Sidewalk LOS Tables
4. Pedestrian Analysis – Corner LOS Tables
5. Pedestrian Analysis – Crosswalk LOS Tables

## Intersection Geometry Data for Pedestrian Analyses

## Sample Sheet

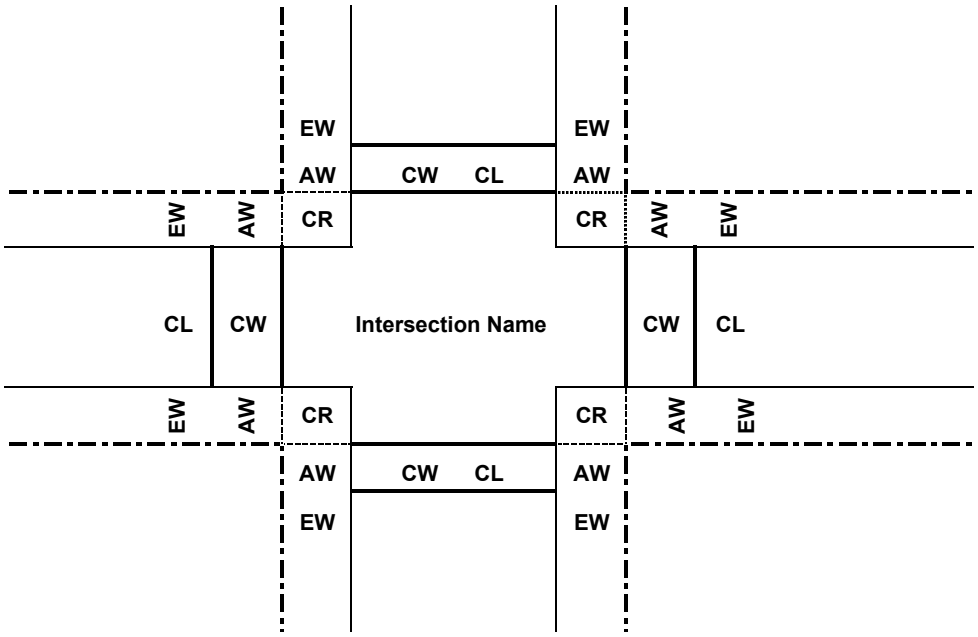


**AW - Actual Sidewalk Width**

**EW - Effective Sidewalk Width**

**CW - Crosswalk Width**

**CL - Crosswalk Length**

**CR - Corner Radius**

**PEDESTRIAN GEOMETRY DATA**
**SAMPLE SHEET**
**Figure S.5-1.1**

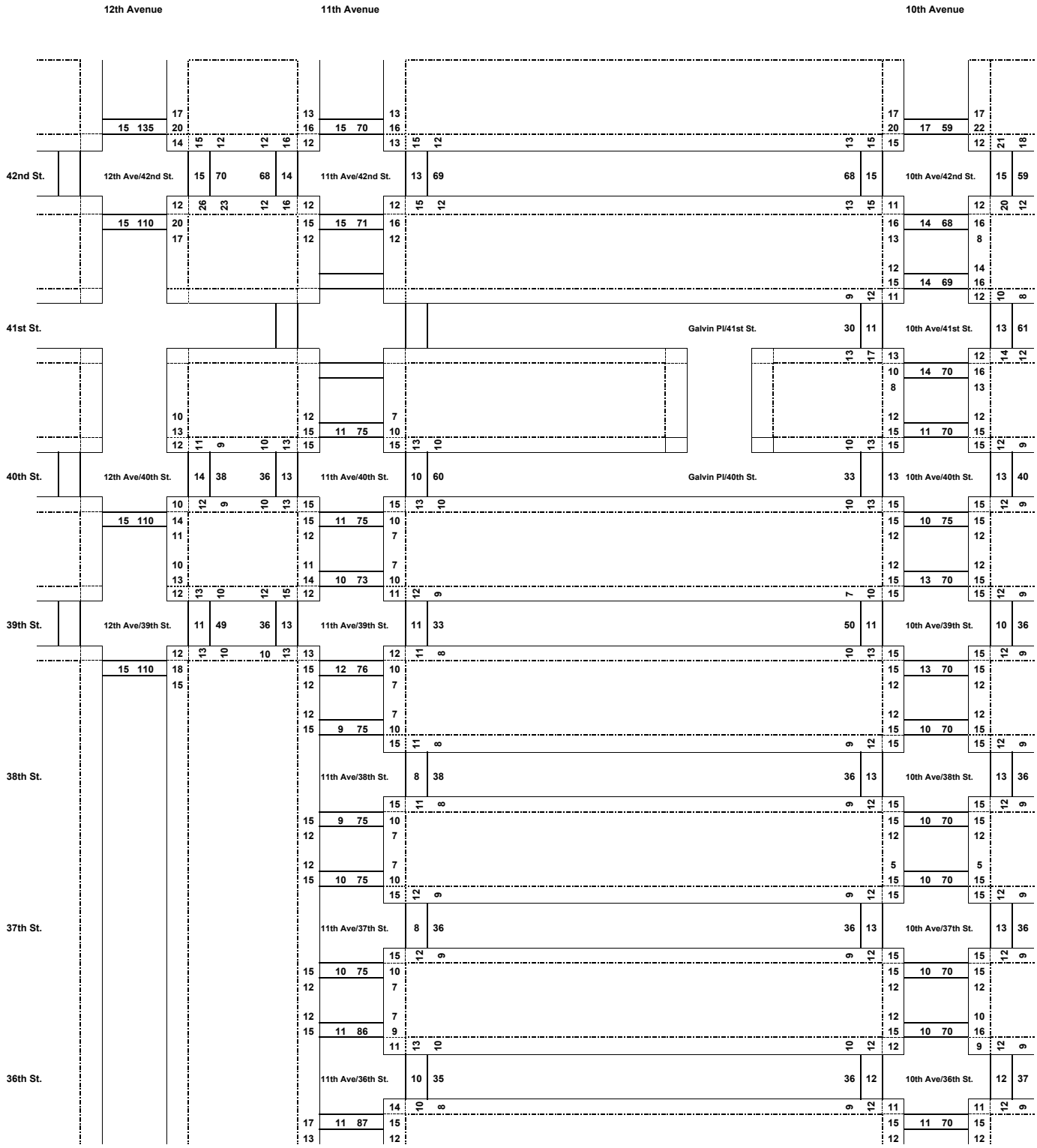


**PEDESTRIAN GEOMETRY DATA**
**EXISTING CONDITION**
**Figure S.5-1.2**

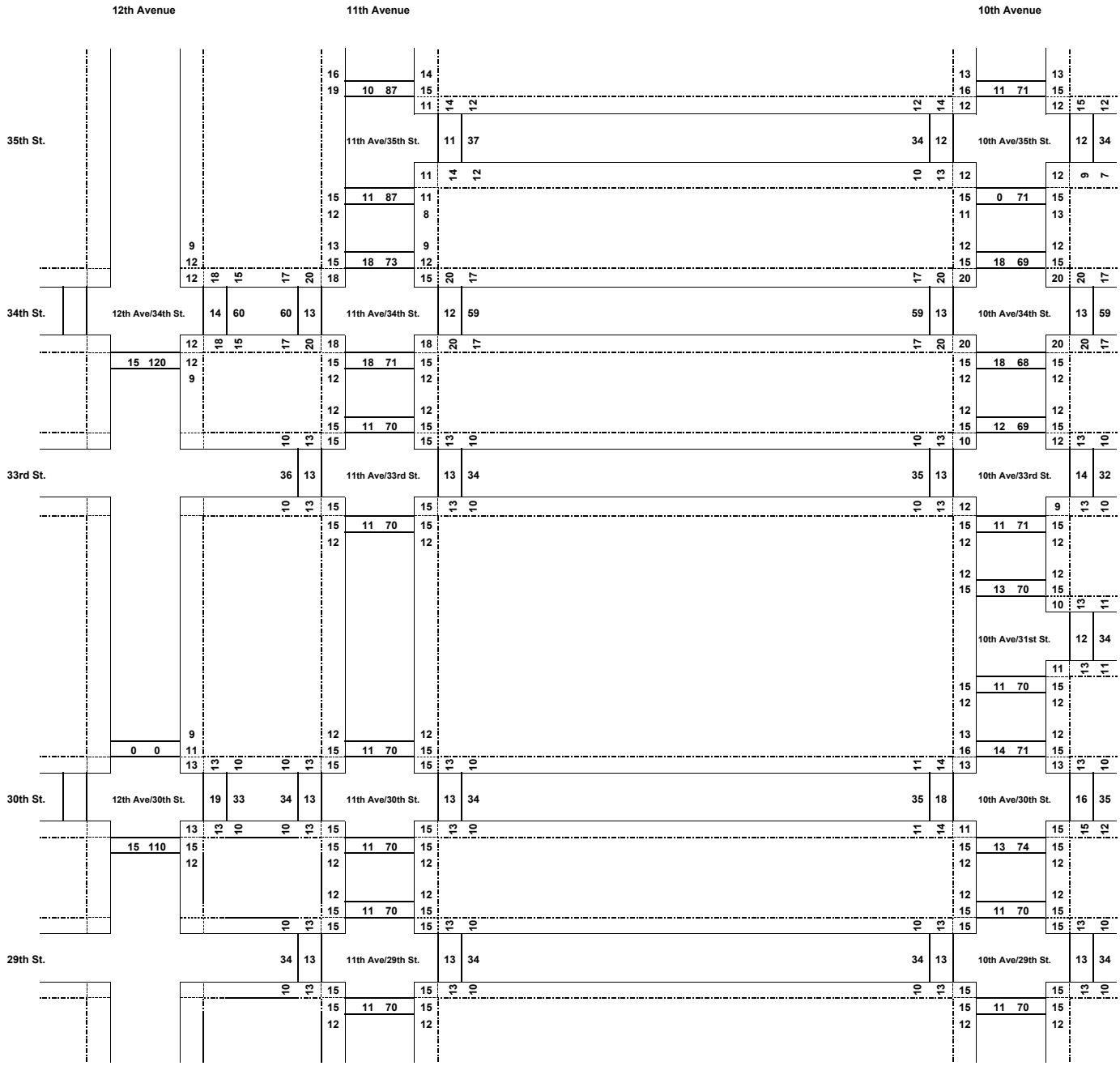


**PEDESTRIAN GEOMETRY DATA**
**EXISTING CONDITION**
**Figure S.5-1.3**

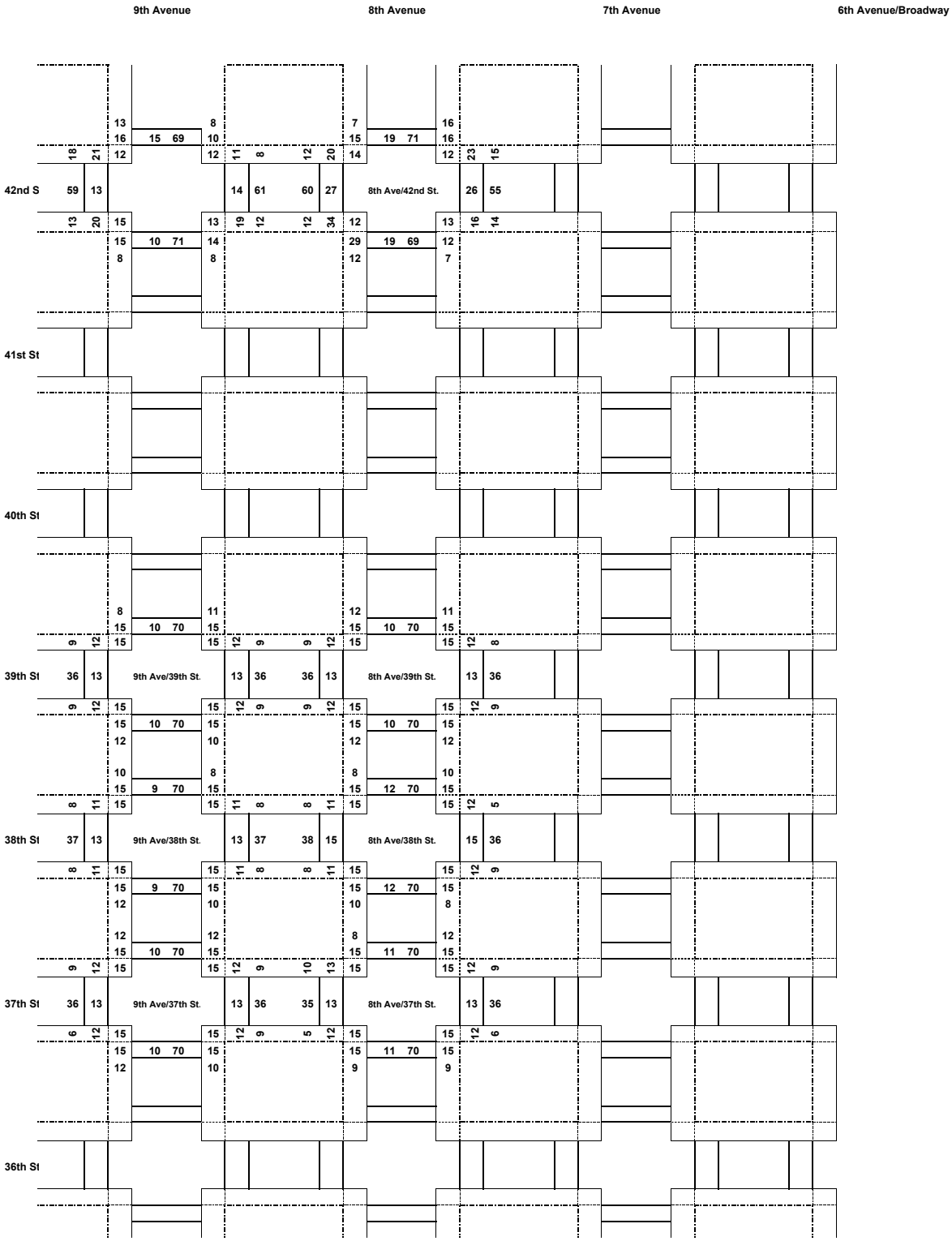


**PEDESTRIAN GEOMETRY DATA**
**EXISTING CONDITION**
**Figure S.5-1.4**

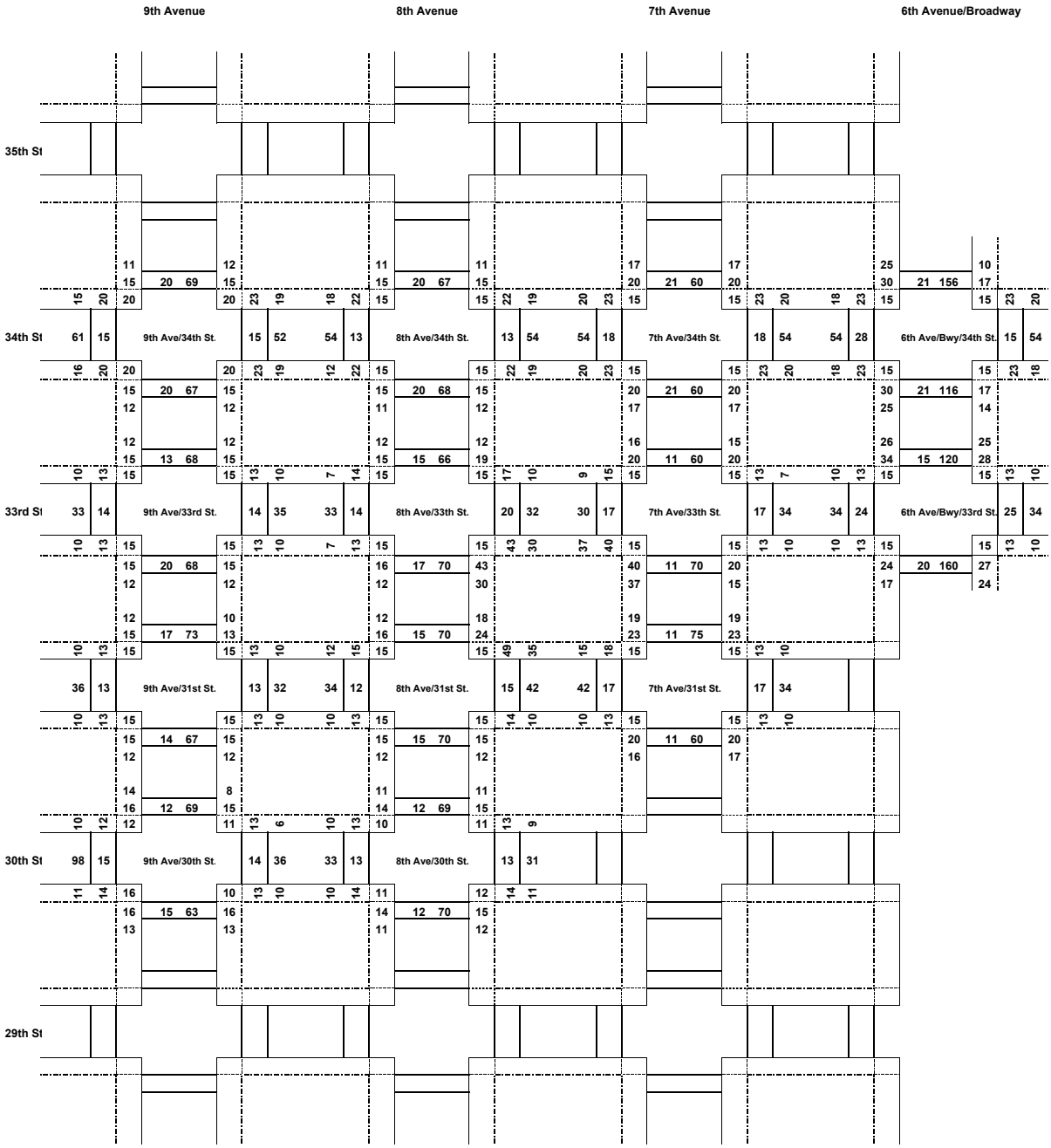


**PEDESTRIAN GEOMETRY DATA**
**EXISTING CONDITION**
**Figure S.5-1.5**

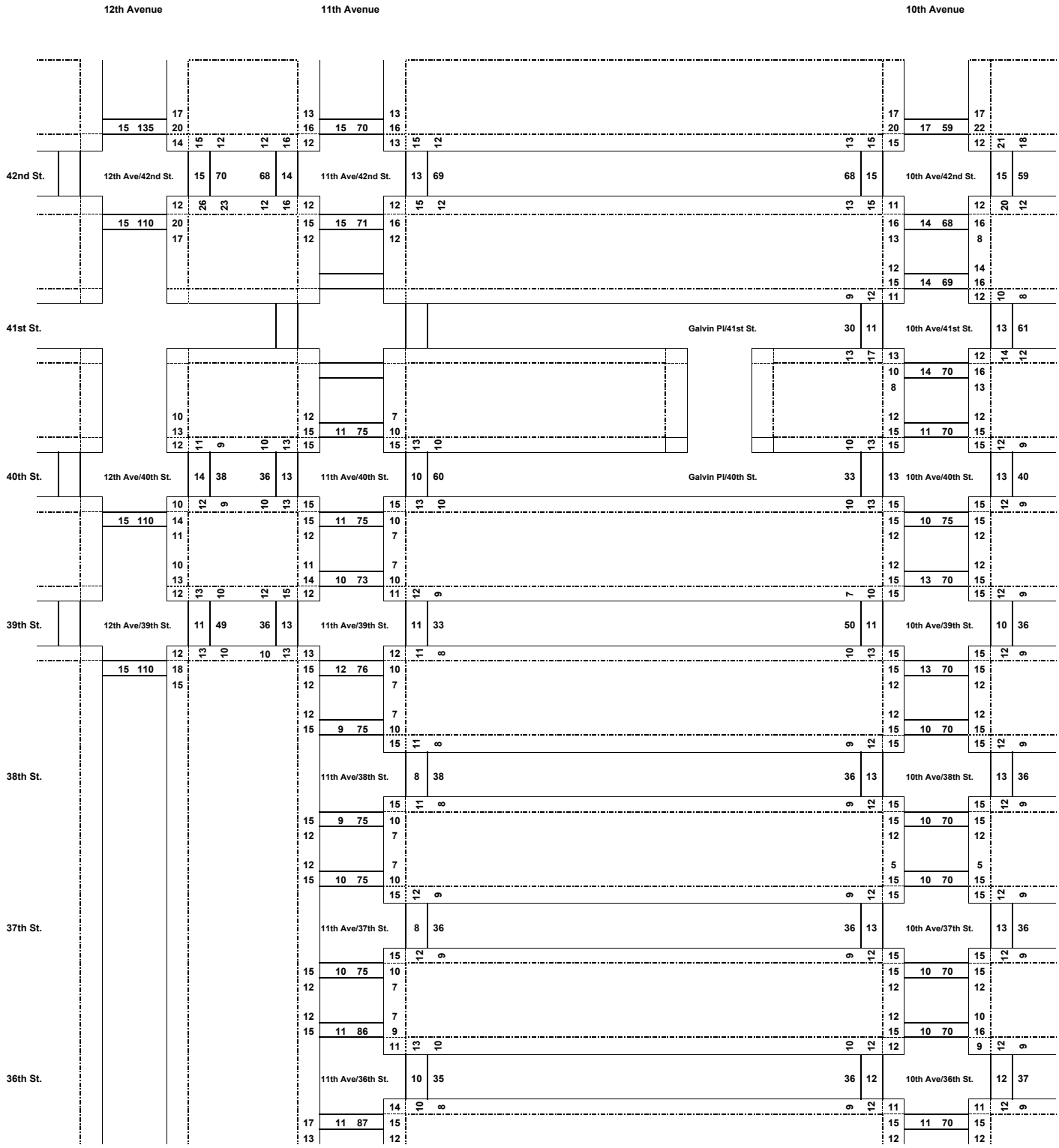


**PEDESTRIAN GEOMETRY DATA**
**FUTURE WITHOUT THE PROPOSED ACTION CONDITION**
**Figure S.5-1.6**

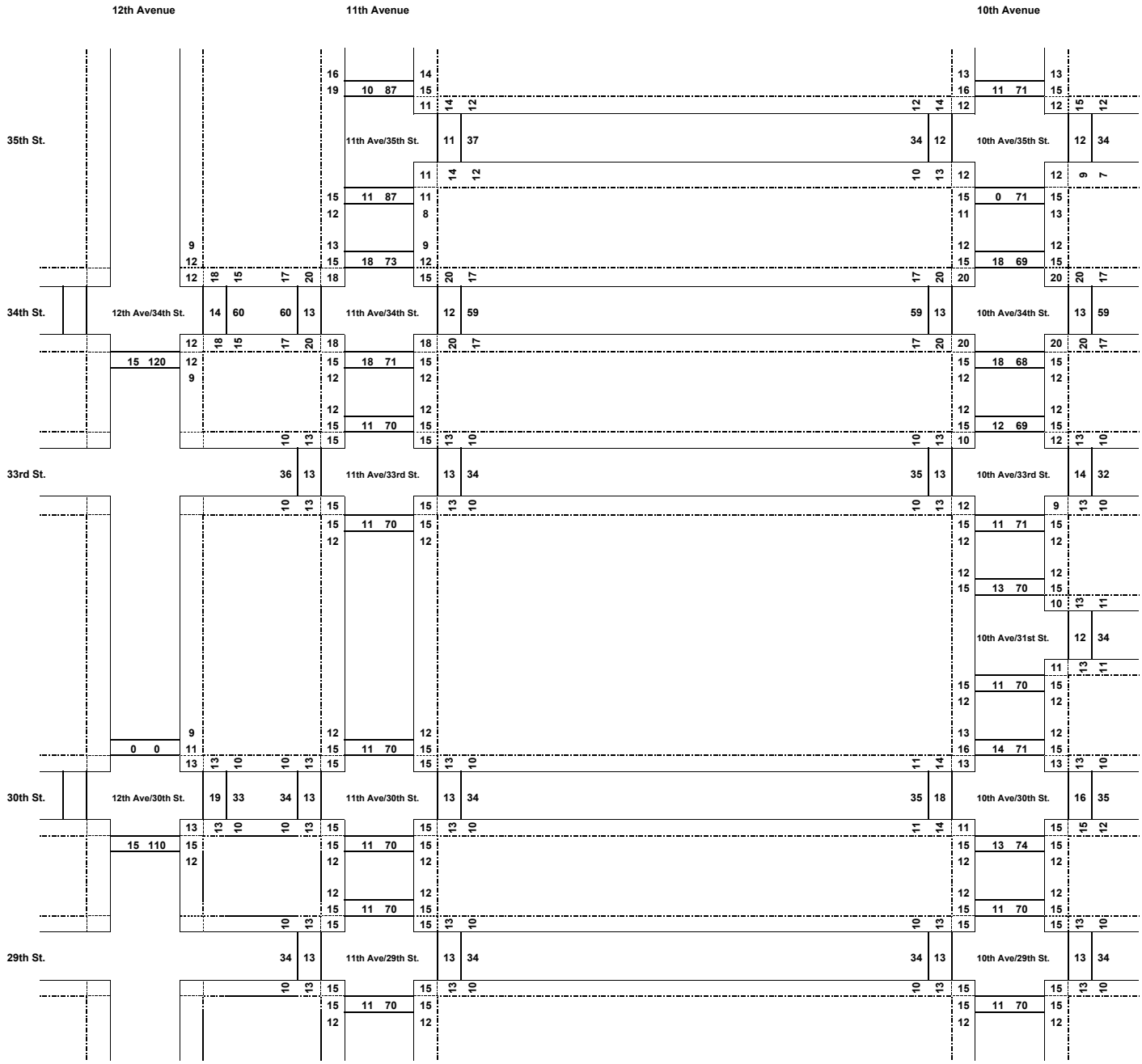


**PEDESTRIAN GEOMETRY DATA**
**FUTURE WITHOUT THE PROPOSED ACTION CONDITION**
**Figure S.5-1.7**

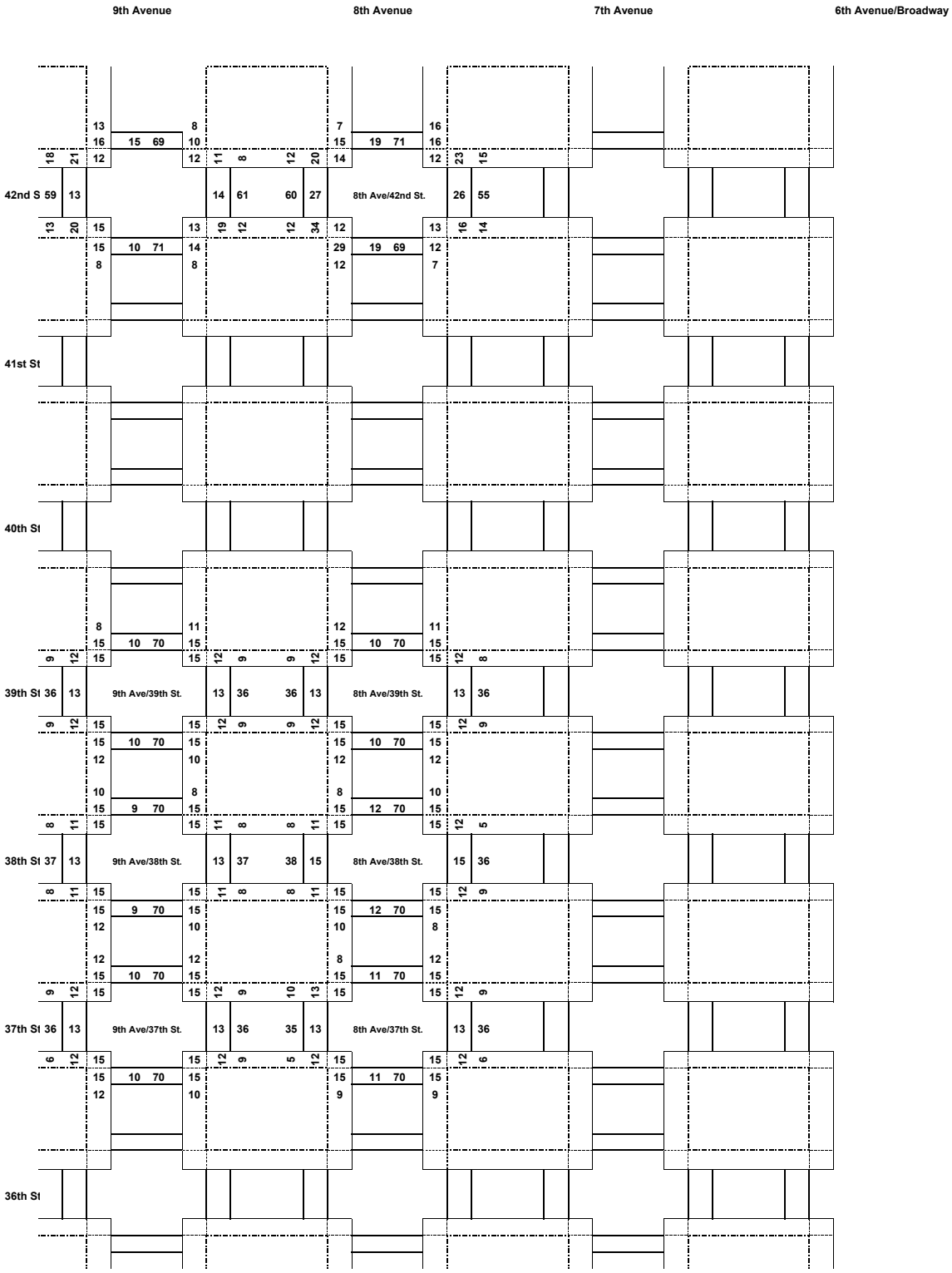


**PEDESTRIAN GEOMETRY DATA**
**FUTURE WITHOUT THE PROPOSED ACTION CONDITION**
**Figure S.5-1.8**

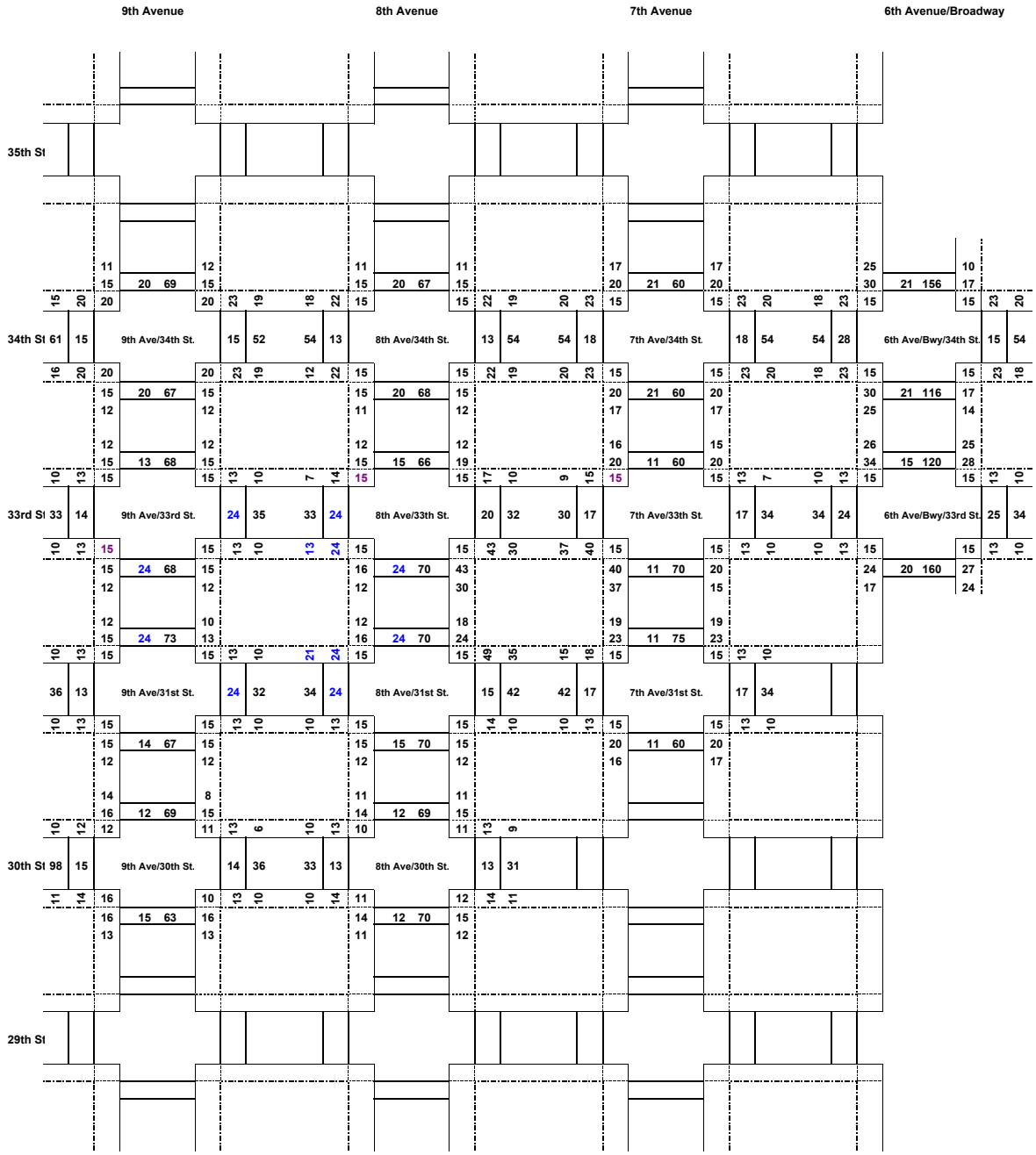


**PEDESTRIAN GEOMETRY DATA**
**FUTURE WITHOUT THE PROPOSED ACTION CONDITION**
**Figure S.5-1.9**

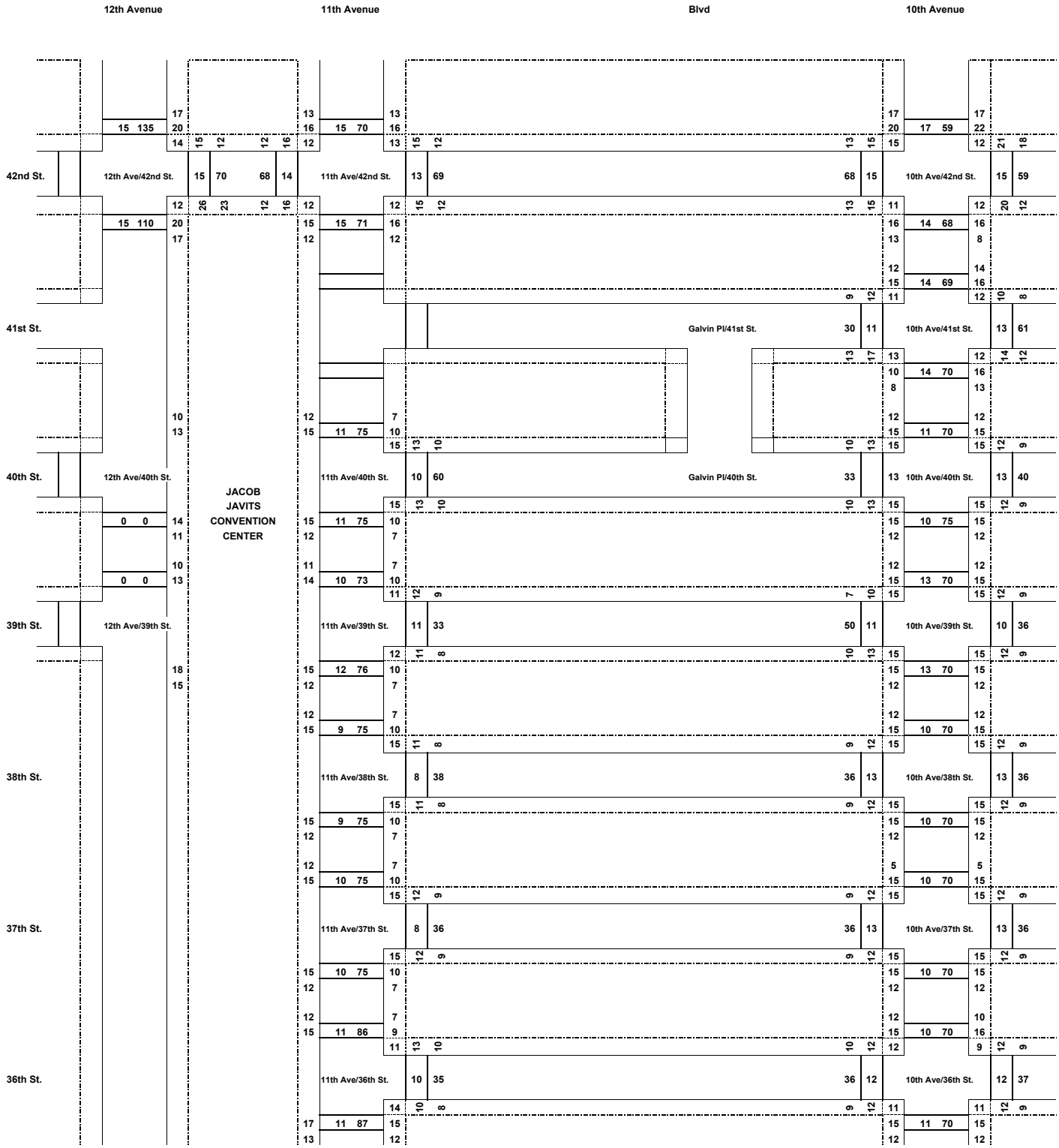


**PEDESTRIAN GEOMETRY DATA**
**2010 FUTURE WITH THE PROPOSED ACTION CONDITION**
**Figure S.5-1.10**

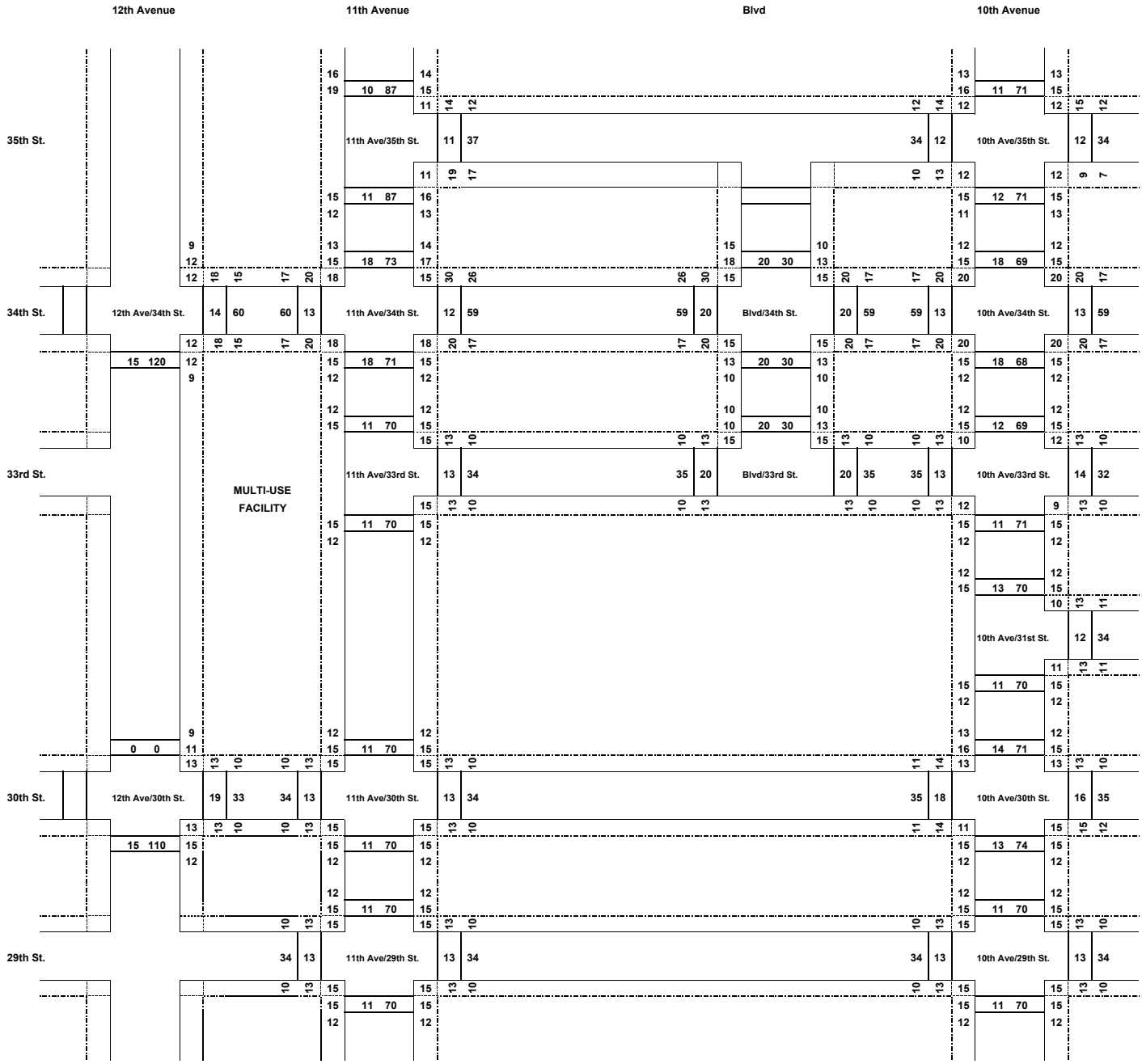


**PEDESTRIAN GEOMETRY DATA**
**2010 FUTURE WITH THE PROPOSED ACTION CONDITION**
**Figure S.5-1.11**

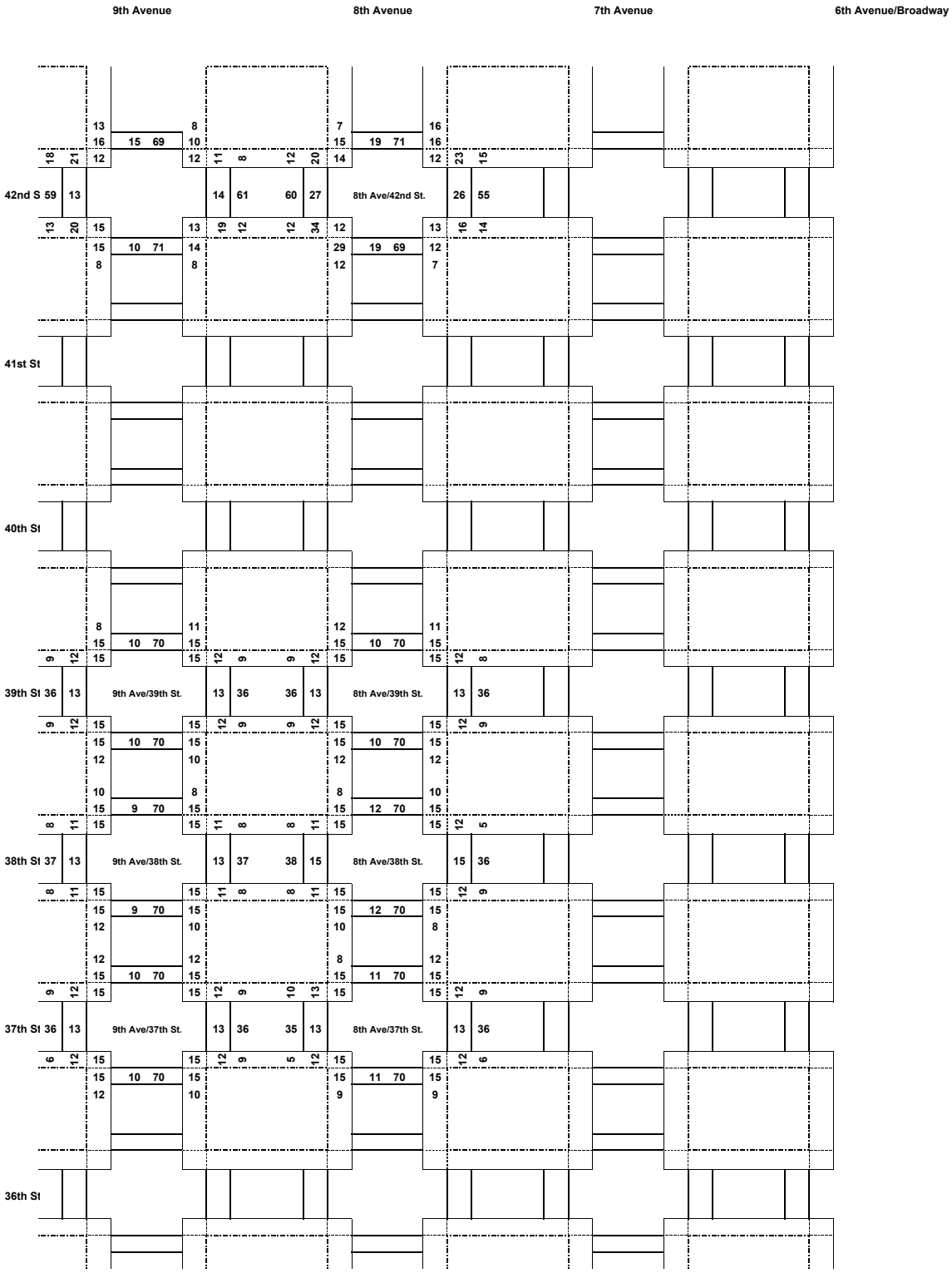


**PEDESTRIAN GEOMETRY DATA**
**2010 FUTURE WITH THE PROPOSED ACTION CONDITION**
**Figure S.5-1.12**

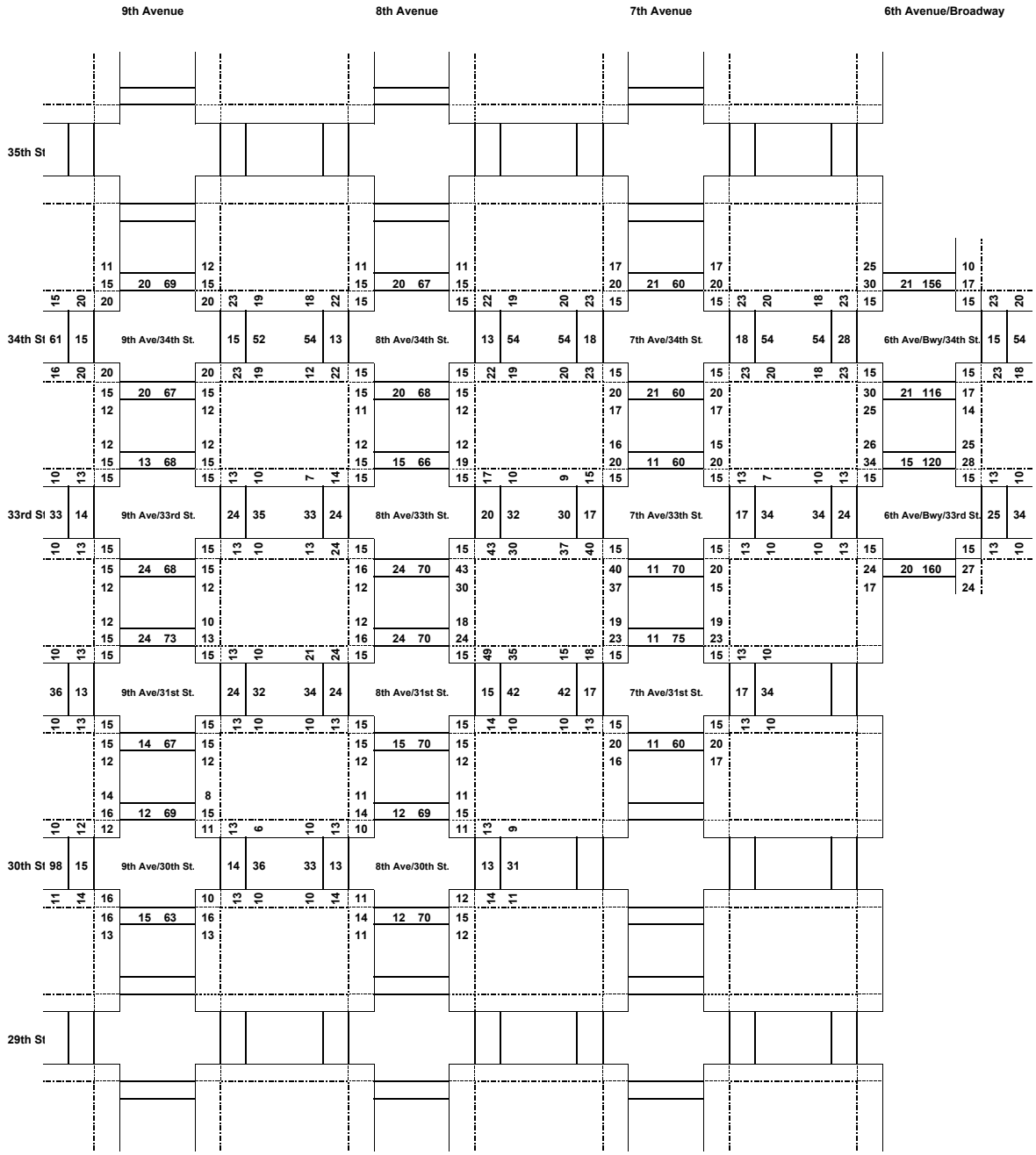


**PEDESTRIAN GEOMETRY DATA**
**2010 FUTURE WITH THE PROPOSED ACTION CONDITION**
**Figure S.5-1.13**

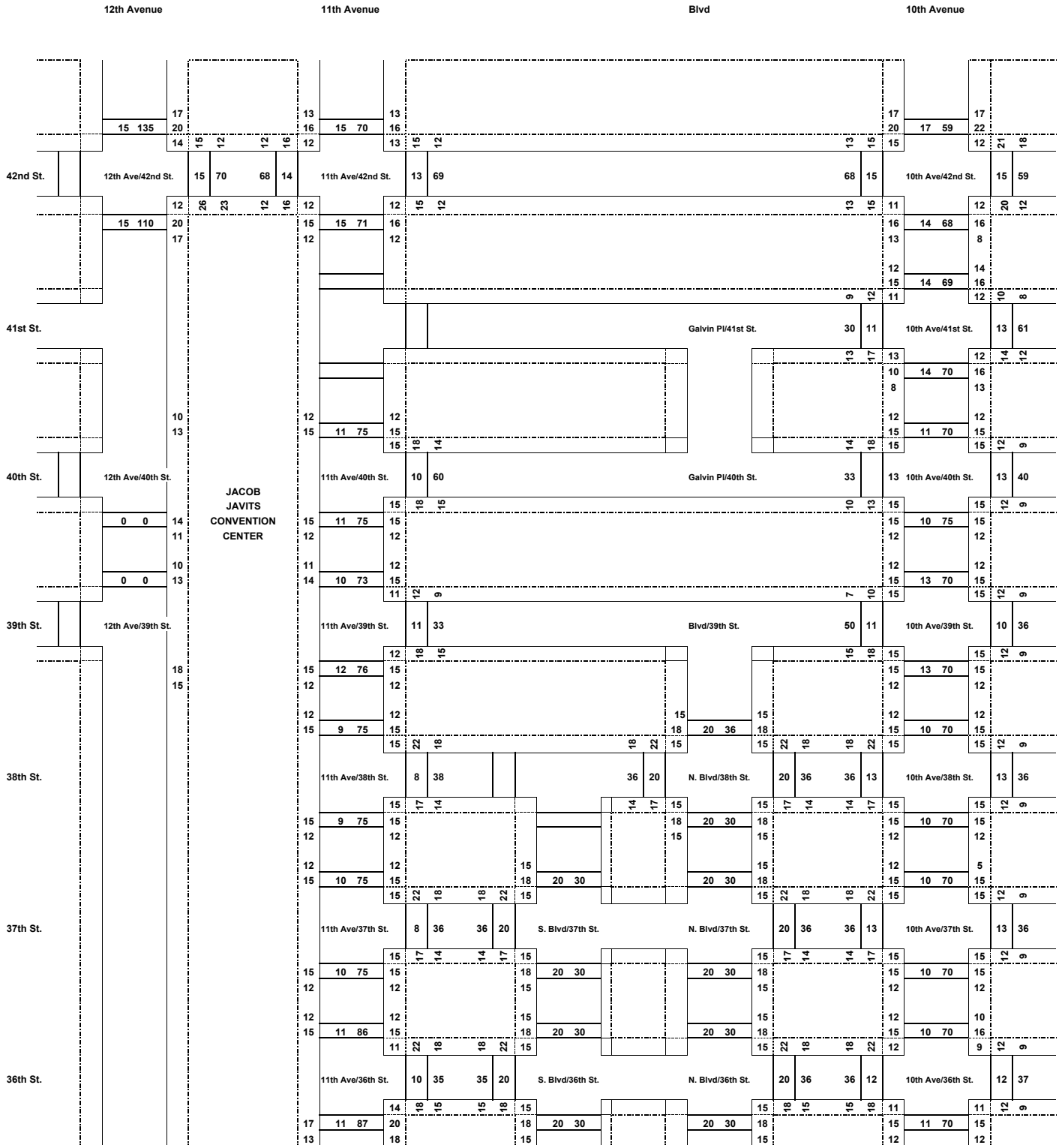


**PEDESTRIAN GEOMETRY DATA**
**2025 FUTURE WITH THE PROPOSED ACTION CONDITION**
**Figure S.5-1.14**

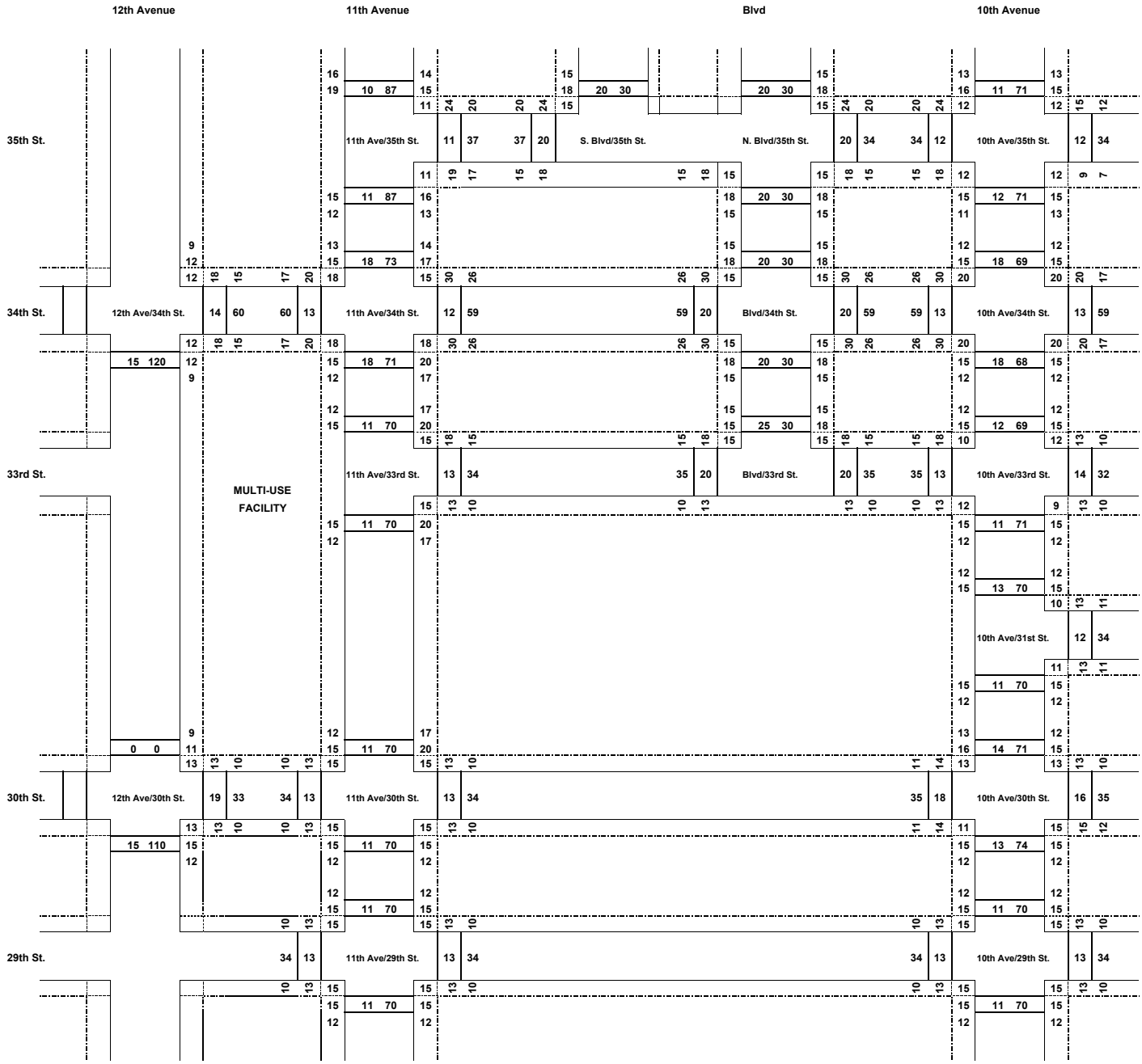


**PEDESTRIAN GEOMETRY DATA**
**2025 FUTURE WITH THE PROPOSED ACTION CONDITION**
**Figure S.5-1.15**

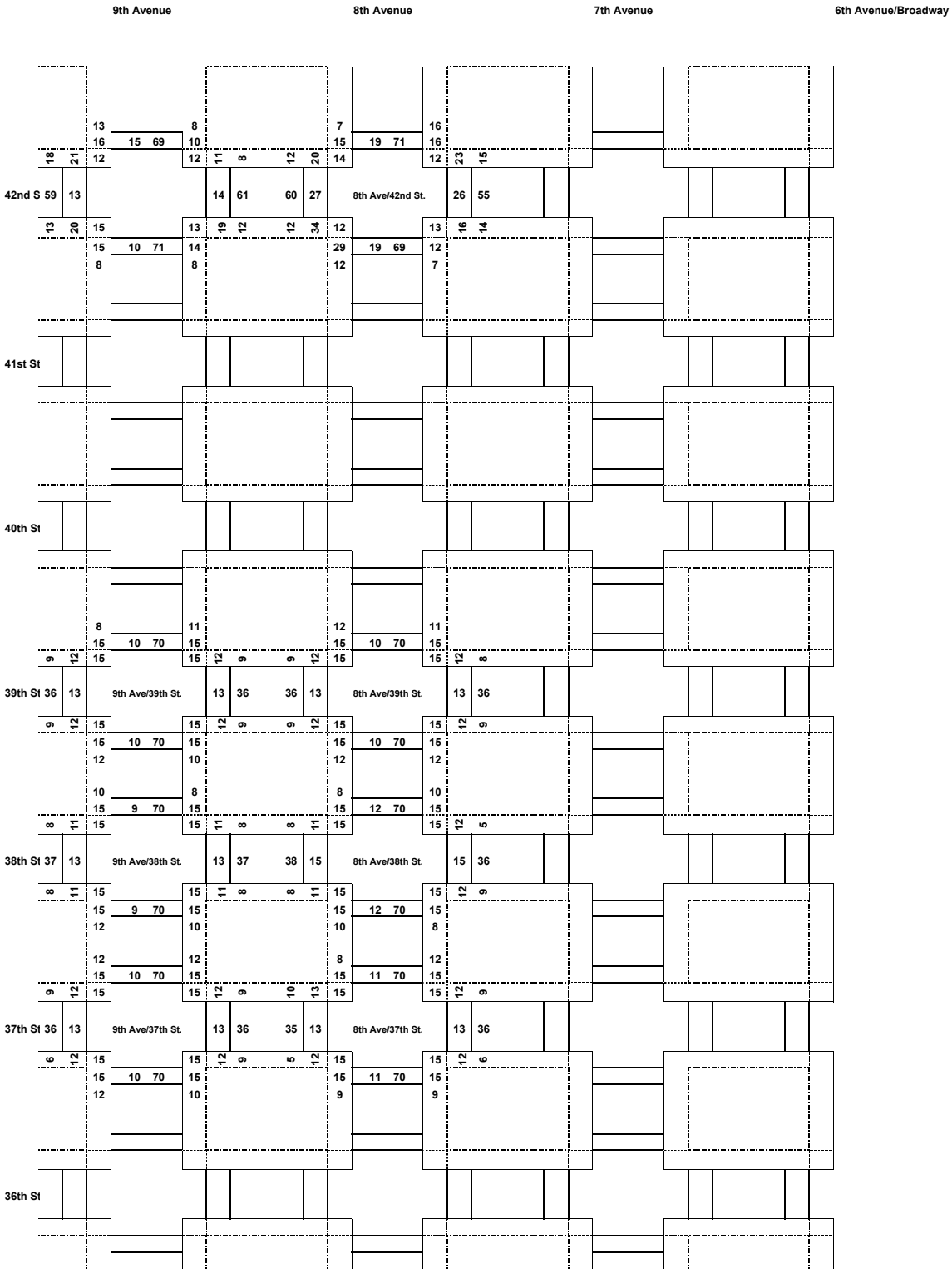


**PEDESTRIAN GEOMETRY DATA**
**2025 FUTURE WITH THE PROPOSED ACTION CONDITION**
**Figure S.5-1.16**

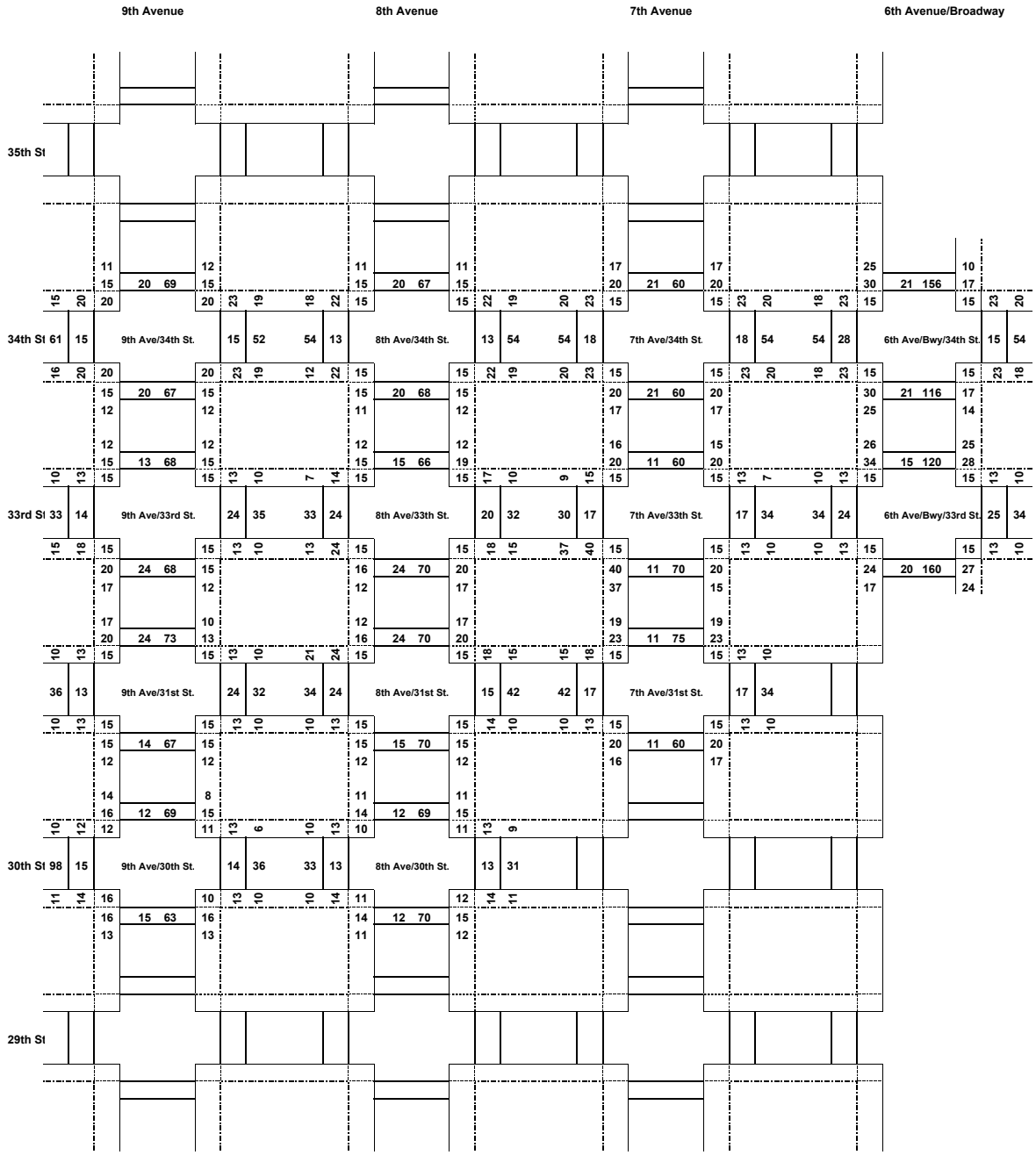


**PEDESTRIAN GEOMETRY DATA**
**2025 FUTURE WITH THE PROPOSED ACTION CONDITION**
**Figure S.5-1.17**

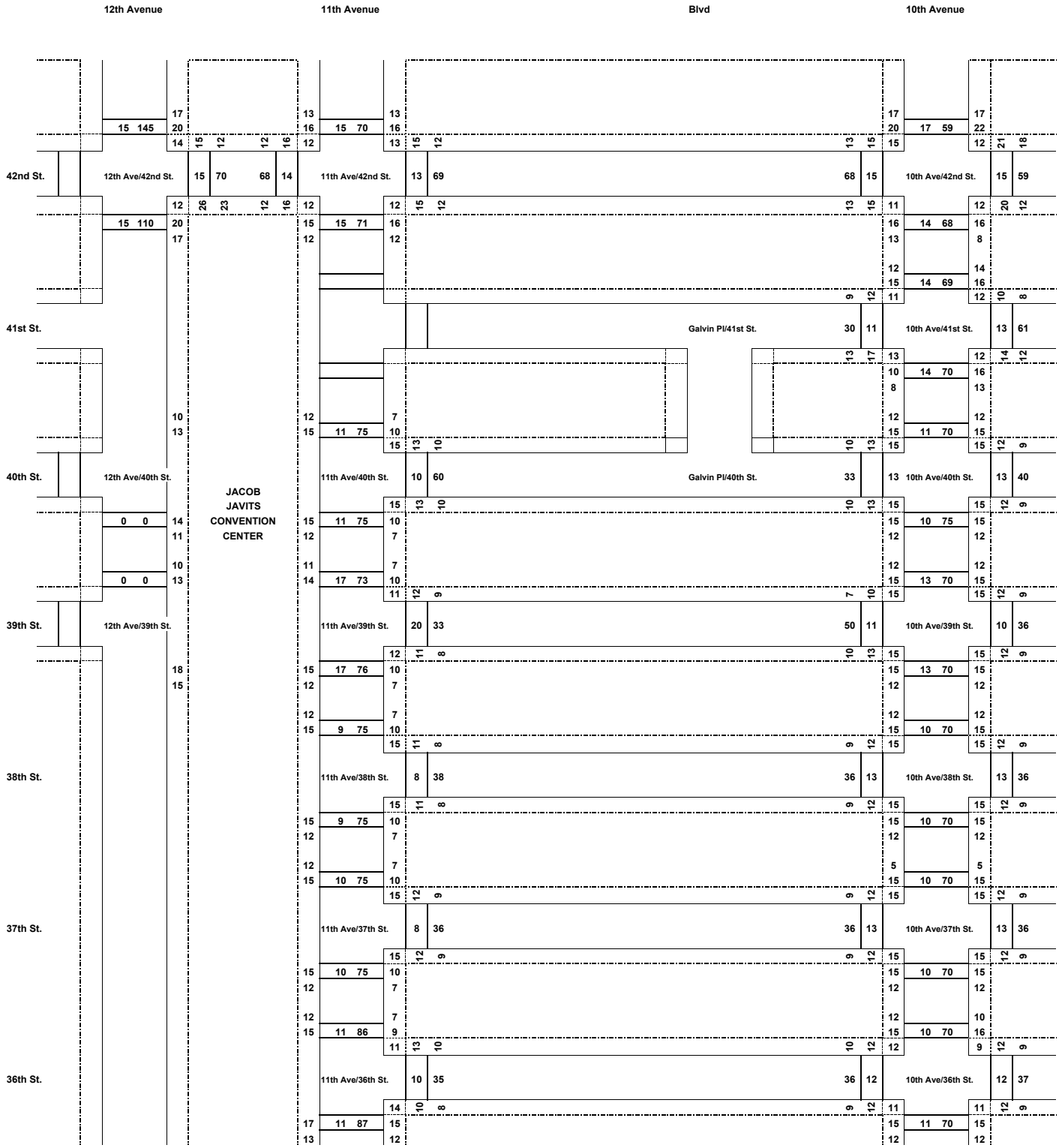


**PEDESTRIAN GEOMETRY DATA**
**2010 FUTURE WITH THE PROPOSED ACTION CONDITION (WITH IMPROVEMENT)**
**Figure S.5-1.18**

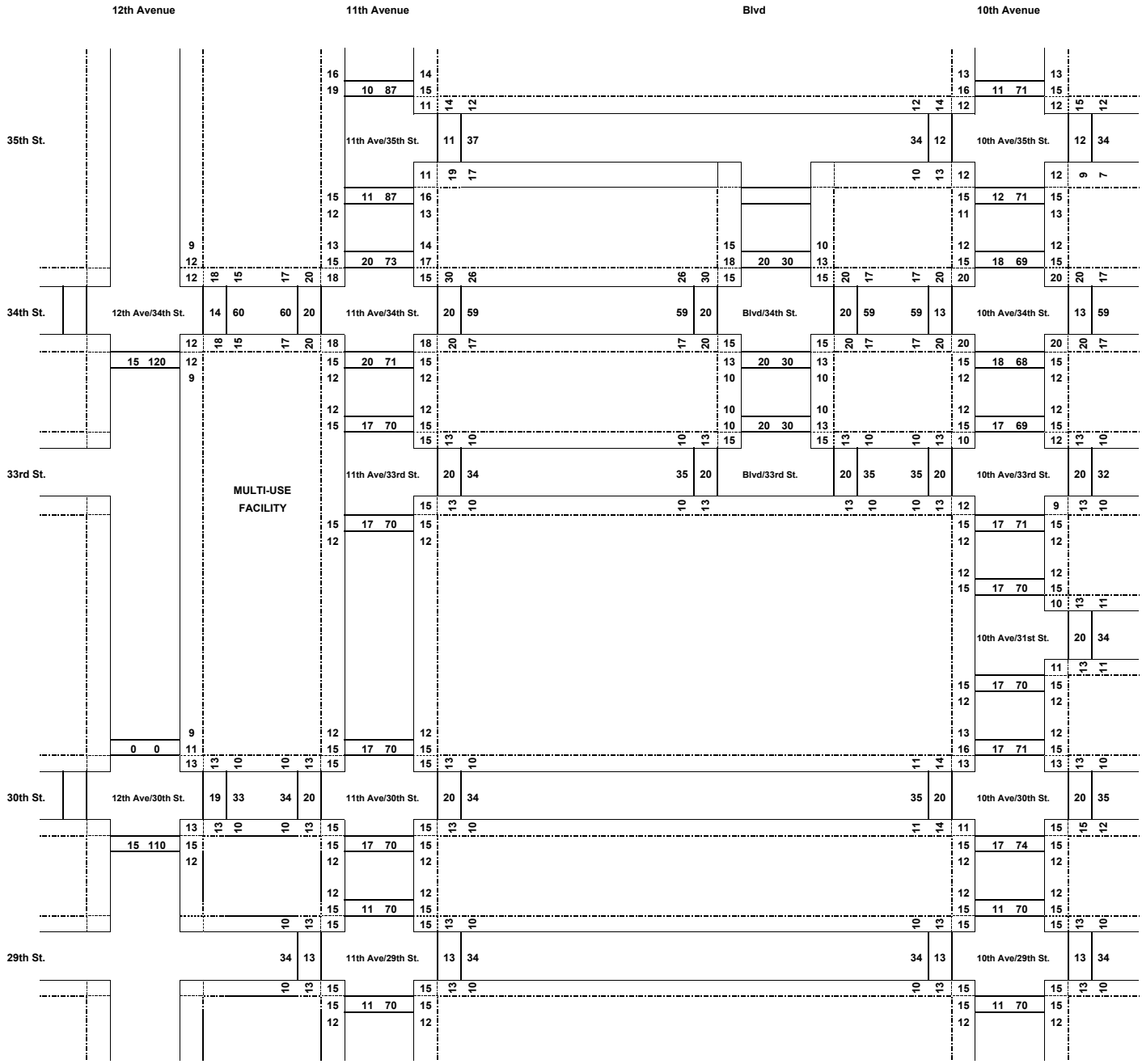


**PEDESTRIAN GEOMETRY DATA**
**2010 FUTURE WITH THE PROPOSED ACTION CONDITION (WITH IMPROVEMENT)**
**Figure S.5-1.19**

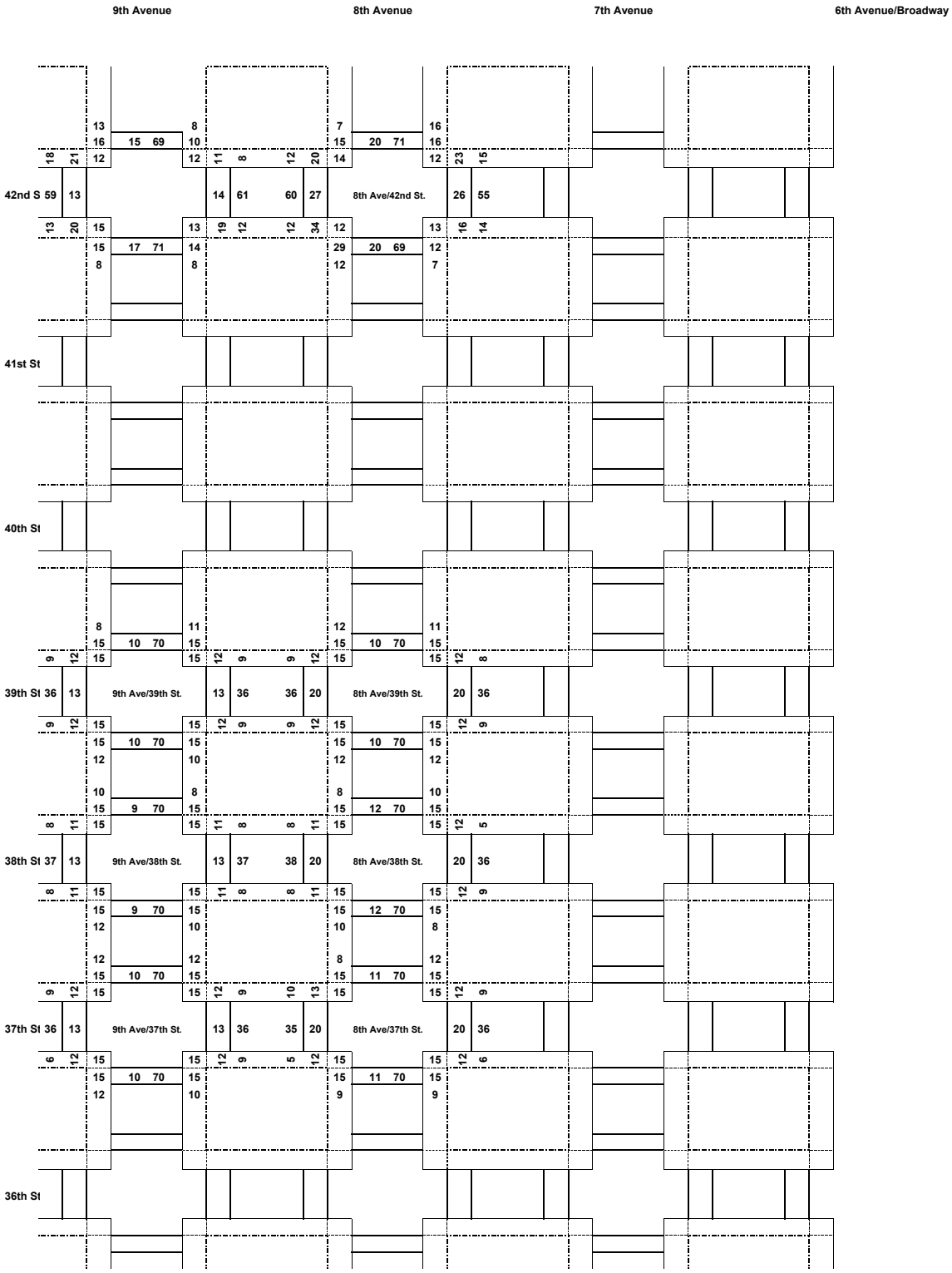


**PEDESTRIAN GEOMETRY DATA**
**2010 FUTURE WITH THE PROPOSED ACTION CONDITION (WITH IMPROVEMENT)**
**Figure S.5-1.20**

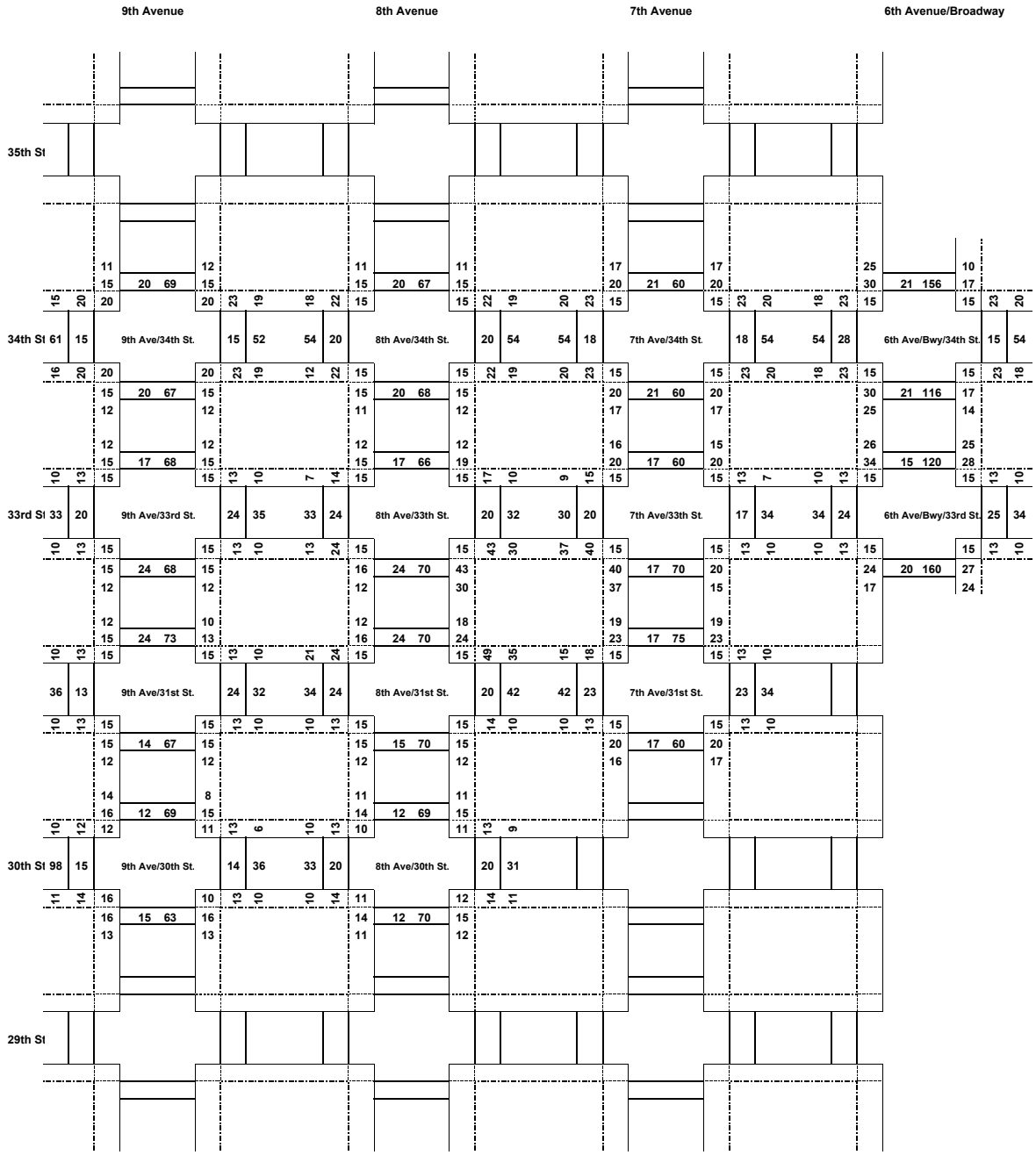


**PEDESTRIAN GEOMETRY DATA**
**2010 FUTURE WITH THE PROPOSED ACTION CONDITION (WITH IMPROVEMENT)**
**Figure S.5-1.21**

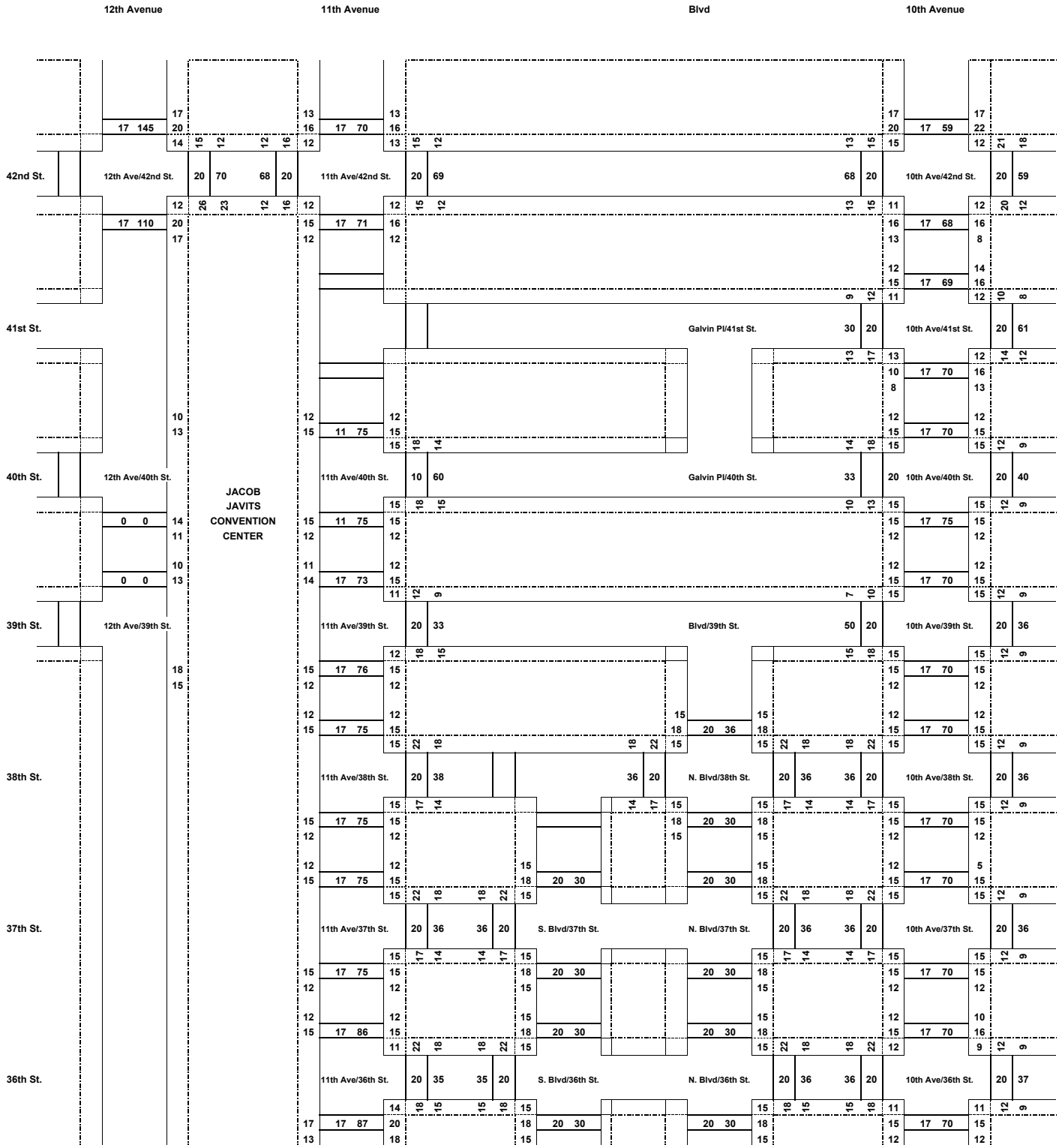


**PEDESTRIAN GEOMETRY DATA**
**2025 FUTURE WITH THE PROPOSED ACTION CONDITION (WITH IMPROVEMENT)**
**Figure S.5-1.22**

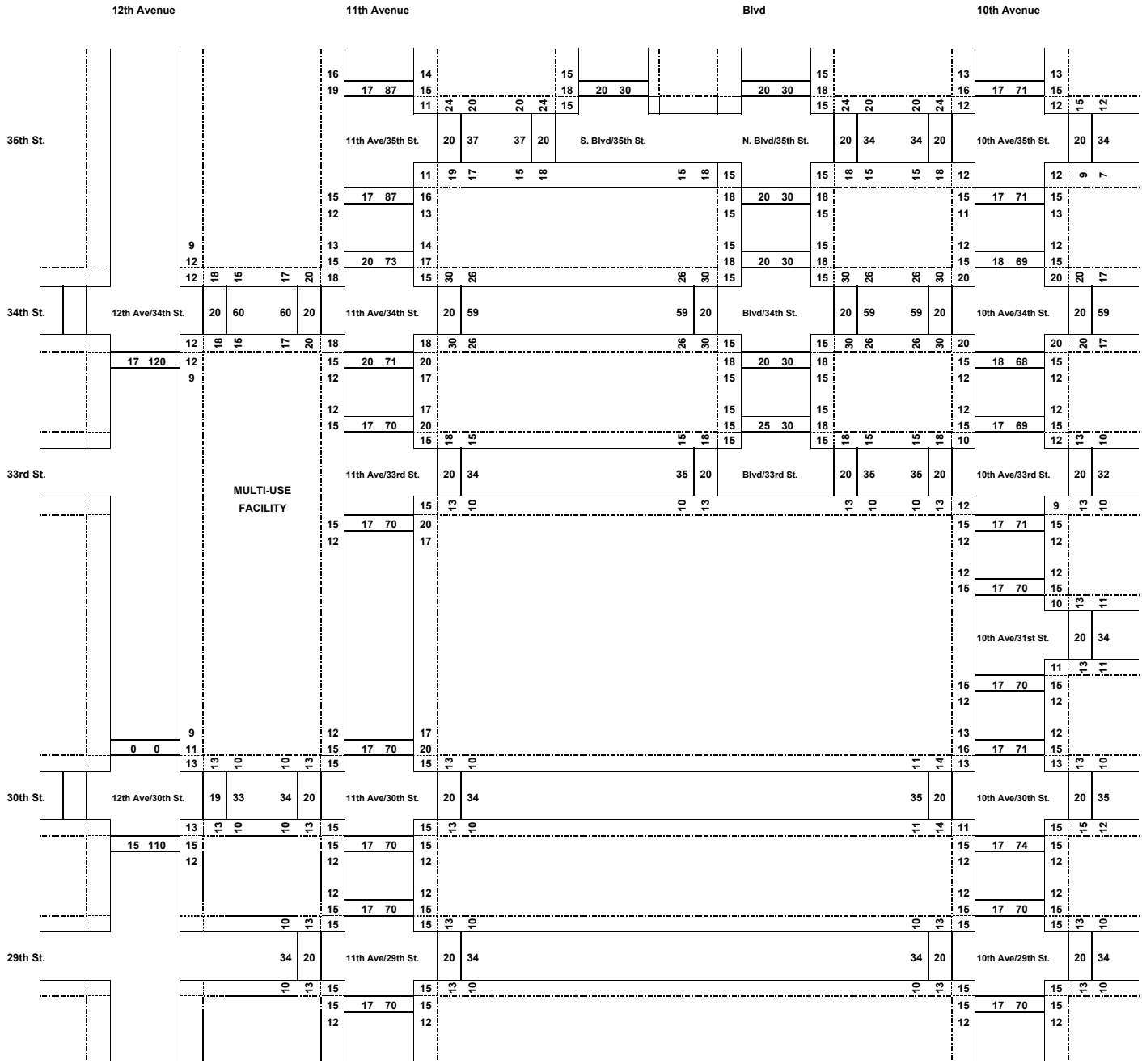


**PEDESTRIAN GEOMETRY DATA**
**2025 FUTURE WITH THE PROPOSED ACTION CONDITION (WITH IMPROVEMENT)**
**Figure S.5-1.23**

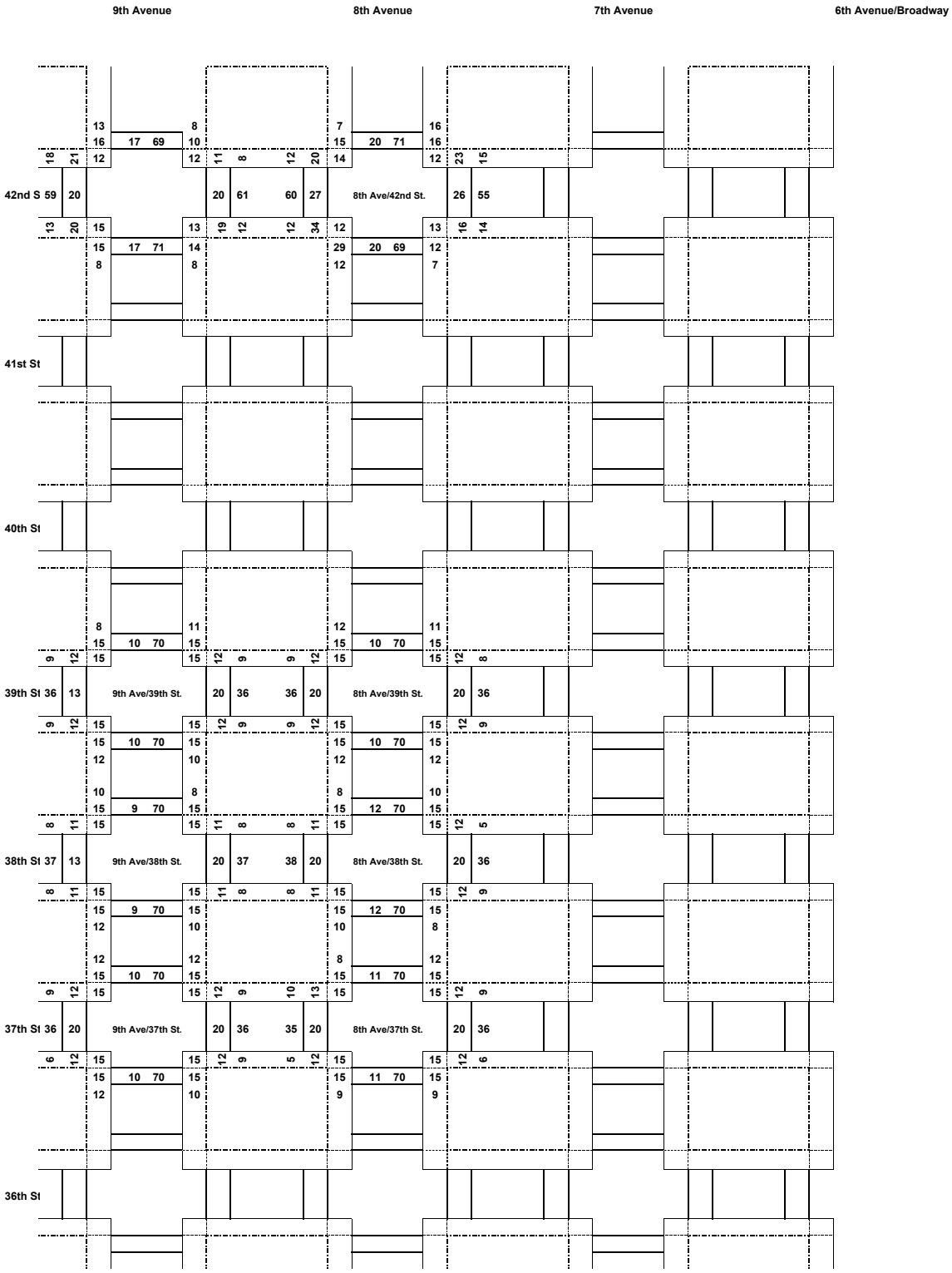


**PEDESTRIAN GEOMETRY DATA**
**2025 FUTURE WITH THE PROPOSED ACTION CONDITION (WITH IMPROVEMENT)**
**Figure S.5-1.24**

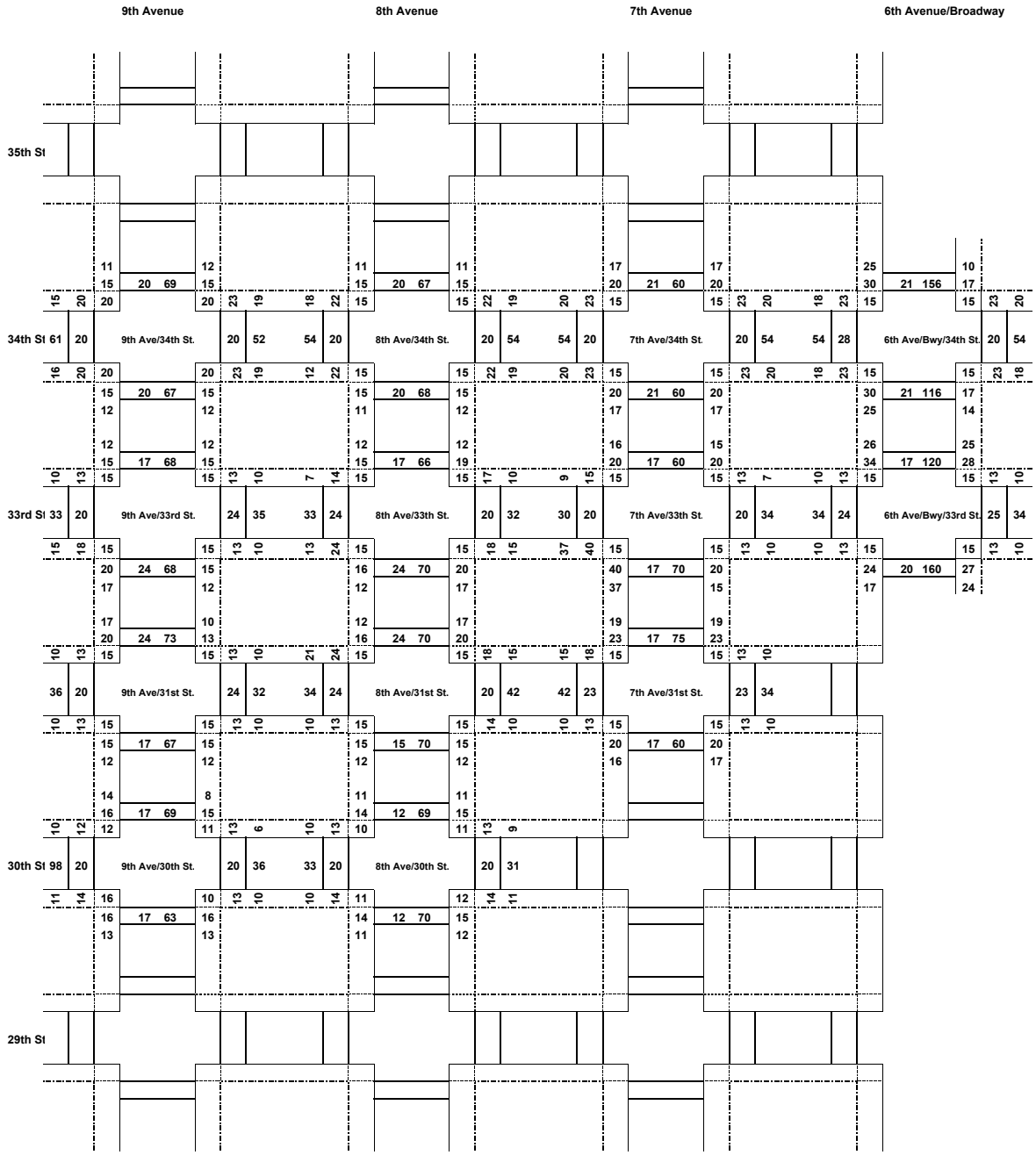


**PEDESTRIAN GEOMETRY DATA**
**2025 FUTURE WITH THE PROPOSED ACTION CONDITION (WITH IMPROVEMENT)**
**Figure S.5-1.25**

## Appendix S.5.2

## PEDESTRIAN MOVEMENTS

| Intersection | Elements | Movements | | | |
|---|---|---|---|---|---|
| ***Intersection Name*** | Sidewalk A | 1 | 2 | 3 | 4 |
| | Sidewalk B | 5 | 6 | 7 | 8 |
| | Sidewalk C | 9 | 10 | 11 | 12 |
| | Sidewalk D | 13 | 14 | 15 | 16 |
| | Corner A & B | 17 | 18 | 19 | 20 |
| | Corner C & D | 21 | 22 | 23 | 24 |
| | Crosswalk (A-B-C) | 25 | 26 | 27 | 28 |
| | Crosswalk (C-D-A) | 29 | 30 | 31 | 32 |

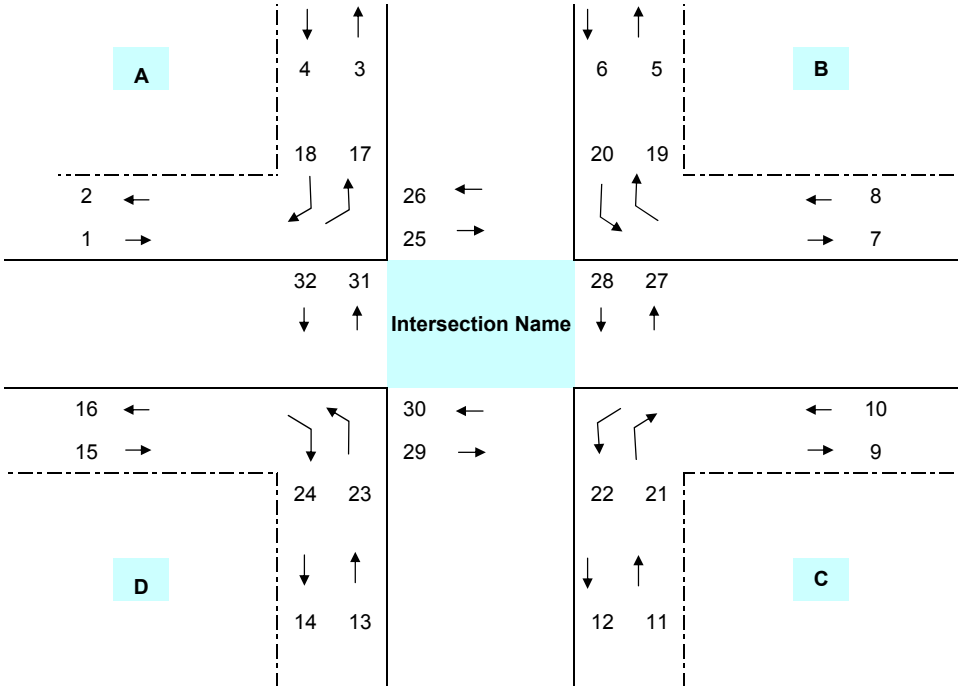

# Appendix S.5.2

**PEDESTRIAN VOLUMES (SIDEWALKS, CORNERS, AND CROSSWALKS)**
**2003 EXISTING CONDITIONS**

| Intersection | Elements | Weekday AM Peak 15-Min. | | | | Weekday MD Peak 15-Min. | | | | Weekday PM Peak 15-Min. | | | | Special Events Evening Peak 15-Min. | | | | Special Events Sunday Peak 15-Min. | | | |
|---|---|---|---|---|---|---|---|---|---|---|---|---|---|---|---|---|---|---|---|---|---|
| ***Rt 9A & West 30th St*** | Sidewalk A | 0 | 0 | 21 | 38 | 0 | 0 | 12 | 19 | 0 | 0 | 32 | 17 | 0 | 0 | 16 | 13 | 0 | 0 | 19 | 25 |
| | Sidewalk B | 0 | 0 | 0 | 0 | 2 | 0 | 0 | 0 | 0 | 6 | 1 | 1 | 4 | 5 | 4 | 3 | 0 | 7 | 2 | 1 |
| | Sidewalk C | 2 | 0 | 2 | 2 | 1 | 0 | 1 | 1 | 1 | 2 | 1 | 1 | 0 | 0 | 1 | 2 | 1 | 1 | 0 | 0 |
| | Sidewalk D | 19 | 25 | 0 | 0 | 13 | 19 | 0 | 0 | 30 | 17 | 0 | 0 | 16 | 14 | 0 | 0 | 19 | 25 | 0 | 0 |
| | Corner A & B | 0 | 0 | 0 | 0 | 0 | 0 | 0 | 0 | 0 | 0 | 4 | 0 | 0 | 0 | 4 | 2 | 0 | 0 | 1 | 0 |
| | Corner C & D | 0 | 0 | 0 | 0 | 0 | 0 | 0 | 0 | 0 | 0 | 0 | 0 | 0 | 0 | 0 | 0 | 0 | 0 | 0 | 0 |
| | Crosswalk (A-B-C) | 0 | 0 | 0 | 0 | 0 | 0 | 1 | 2 | 0 | 0 | 0 | 4 | 0 | 0 | 2 | 1 | 0 | 1 | 0 | 6 |
| | Crosswalk (C-D-A) | 5 | 2 | 23 | 35 | 1 | 1 | 14 | 30 | 2 | 1 | 27 | 30 | 0 | 0 | 23 | 14 | 0 | 2 | 19 | 23 |
| ***Rt 9A & West 34th St*** | Sidewalk A | 1 | 1 | 0 | 4 | 0 | 0 | 3 | 4 | 0 | 0 | 0 | 3 | 0 | 0 | 0 | 0 | 0 | 0 | 14 | 18 |
| | Sidewalk B | 0 | 0 | 0 | 5 | 0 | 3 | 1 | 6 | 0 | 1 | 0 | 4 | 1 | 0 | 0 | 2 | 6 | 3 | 3 | 0 |
| | Sidewalk C | 1 | 3 | 0 | 0 | 1 | 0 | 2 | 0 | 1 | 6 | 0 | 0 | 1 | 2 | 1 | 0 | 0 | 1 | 5 | 0 |
| | Sidewalk D | 9 | 1 | 0 | 0 | 2 | 3 | 2 | 0 | 2 | 0 | 0 | 0 | 0 | 0 | 0 | 0 | 15 | 18 | 0 | 0 |
| | Corner A & B | 3 | 0 | 3 | 0 | 7 | 7 | 7 | 7 | 3 | 13 | 3 | 13 | 0 | 0 | 0 | 4 | 0 | 0 | 3 | 0 |
| | Corner C & D | 3 | 0 | 3 | 0 | 4 | 3 | 4 | 3 | 2 | 9 | 2 | 8 | 0 | 0 | 0 | 0 | 0 | 0 | 0 | 0 |
| | Crosswalk (A-B-C) | 0 | 3 | 0 | 0 | 0 | 0 | 2 | 0 | 0 | 0 | 6 | 0 | 0 | 0 | 1 | 0 | 0 | 0 | 5 | 0 |
| | Crosswalk (C-D-A) | 5 | 1 | 0 | 4 | 3 | 0 | 3 | 4 | 2 | 0 | 0 | 3 | 0 | 0 | 9 | 14 | 1 | 1 | 13 | 13 |
| ***Rt 9A & West 39th St*** | Sidewalk A | 0 | 0 | 0 | 0 | 0 | 0 | 0 | 0 | 0 | 0 | 0 | 0 | | | | | | | | |
| | Sidewalk B | 0 | 0 | 0 | 0 | 7 | 4 | 0 | 0 | 3 | 0 | 0 | 0 | | | | | | | | |
| | Sidewalk C | 0 | 1 | 1 | 2 | 10 | 13 | 9 | 4 | 2 | 6 | 4 | 0 | | | | | | | | |
| | Sidewalk D | 0 | 0 | 0 | 0 | 0 | 11 | 0 | 0 | 0 | 2 | 0 | 0 | | | | | | | | |
| | Corner A & B | 1 | 2 | 0 | 0 | 0 | 0 | 0 | 0 | 0 | 0 | 0 | 0 | | | | | | | | |
| | Corner C & D | 0 | 0 | 0 | 0 | 0 | 0 | 0 | 0 | 0 | 2 | 0 | 0 | | | | | | | | |
| | Crosswalk (A-B-C) | 2 | 0 | 0 | 0 | 0 | 0 | 6 | 3 | 0 | 0 | 3 | 0 | | | | | | | | |
| | Crosswalk (C-D-A) | 8 | 7 | 32 | 42 | 2 | 2 | 29 | 15 | 2 | 6 | 39 | 28 | | | | | | | | |
| ***Rt 9A & West 40th St*** | Sidewalk A | 0 | 0 | 0 | 0 | 0 | 1 | 1 | 0 | 1 | 3 | 0 | 0 | | | | | | | | |
| | Sidewalk B | 0 | 0 | 0 | 0 | 3 | 0 | 0 | 2 | 2 | 3 | 1 | 2 | | | | | | | | |
| | Sidewalk C | 0 | 0 | 0 | 0 | 0 | 1 | 2 | 0 | 0 | 0 | 1 | 0 | | | | | | | | |
| | Sidewalk D | 0 | 0 | 0 | 0 | 0 | 0 | 0 | 0 | 0 | 0 | 0 | 0 | | | | | | | | |
| | Corner A & B | 0 | 0 | 0 | 0 | 0 | 0 | 0 | 1 | 0 | 0 | 0 | 1 | | | | | | | | |
| | Corner C & D | 0 | 0 | 0 | 0 | 1 | 0 | 0 | 0 | 0 | 0 | 0 | 0 | | | | | | | | |
| | Crosswalk (A-B-C) | 0 | 0 | 2 | 0 | 0 | 0 | 1 | 4 | 0 | 0 | 1 | 0 | | | | | | | | |
| | Crosswalk (C-D-A) | 0 | 2 | 25 | 45 | 0 | 1 | 19 | 17 | 1 | 2 | 42 | 35 | | | | | | | | |
| ***Rt 9A & West 42nd St*** | Sidewalk A | 2 | 0 | 3 | 0 | 2 | 6 | 0 | 0 | 27 | 0 | 0 | 0 | | | | | | | | |
| | Sidewalk B | 4 | 10 | 4 | 10 | 8 | 15 | 7 | 10 | 3 | 23 | 19 | 3 | | | | | | | | |
| | Sidewalk C | 10 | 19 | 1 | 4 | 6 | 6 | 6 | 2 | 25 | 5 | 9 | 7 | | | | | | | | |
| | Sidewalk D | 2 | 3 | 0 | 3 | 0 | 0 | 2 | 2 | 0 | 7 | 1 | 0 | | | | | | | | |
| | Corner A & B | 0 | 0 | 4 | 5 | 3 | 0 | 12 | 4 | 22 | 0 | 5 | 0 | | | | | | | | |
| | Corner C & D | 4 | 0 | 0 | 0 | 0 | 1 | 0 | 0 | 2 | 4 | 0 | 0 | | | | | | | | |
| | Crosswalk (A-B-C) | 2 | 7 | 2 | 6 | 2 | 7 | 8 | 3 | 18 | 4 | 1 | 21 | | | | | | | | |
| | Crosswalk (C-D-A) | 5 | 13 | 31 | 44 | 2 | 3 | 34 | 34 | 2 | 4 | 14 | 15 | | | | | | | | |
| ***Eleventh Ave & West 29th*** | Sidewalk A | 0 | 0 | 1 | 1 | 2 | 1 | 0 | 3 | 0 | 4 | 5 | 9 | | | | | | | | |
| | Sidewalk B | 1 | 0 | 1 | 3 | 3 | 3 | 2 | 5 | 2 | 3 | 0 | 1 | | | | | | | | |
| | Sidewalk C | 3 | 5 | 8 | 5 | 3 | 3 | 12 | 8 | 3 | 2 | 5 | 8 | | | | | | | | |
| | Sidewalk D | 0 | 0 | 0 | 0 | 4 | 1 | 0 | 0 | 3 | 8 | 5 | 2 | | | | | | | | |
| | Corner A & B | 0 | 0 | 0 | 0 | 0 | 0 | 2 | 1 | 0 | 1 | 0 | 0 | | | | | | | | |
| | Corner C & D | 0 | 4 | 0 | 0 | 3 | 4 | 0 | 0 | 2 | 3 | 1 | 0 | | | | | | | | |
| | Crosswalk (A-B-C) | 1 | 2 | 1 | 0 | 0 | 1 | 4 | 4 | 0 | 0 | 2 | 4 | | | | | | | | |
| | Crosswalk (C-D-A) | 0 | 0 | 1 | 2 | 2 | 1 | 2 | 4 | 2 | 0 | 5 | 7 | | | | | | | | |
| ***Eleventh Ave & West 30th*** | Sidewalk A | 2 | 0 | 1 | 1 | 10 | 5 | 1 | 10 | 2 | 6 | 5 | 5 | 0 | 0 | 0 | 1 | 0 | 0 | 1 | 1 |
| | Sidewalk B | 1 | 0 | 1 | 0 | 5 | 2 | 1 | 4 | 5 | 2 | 0 | 0 | 3 | 3 | 4 | 0 | 0 | 0 | 1 | 1 |
| | Sidewalk C | 3 | 0 | 2 | 0 | 0 | 1 | 7 | 3 | 1 | 0 | 15 | 1 | 2 | 0 | 0 | 0 | 0 | 2 | 0 | 3 |
| | Sidewalk D | 0 | 3 | 1 | 0 | 3 | 2 | 3 | 2 | 5 | 7 | 5 | 0 | 0 | 0 | 0 | 1 | 0 | 2 | 2 | 0 |
| | Corner A & B | 0 | 5 | 0 | 3 | 17 | 14 | 14 | 11 | 4 | 13 | 2 | 8 | 0 | 0 | 3 | 0 | 0 | 0 | 0 | 0 |
| | Corner C & D | 0 | 3 | 0 | 4 | 14 | 9 | 14 | 9 | 2 | 8 | 2 | 8 | 0 | 0 | 0 | 0 | 2 | 0 | 0 | 0 |
| | Crosswalk (A-B-C) | 1 | 0 | 1 | 0 | 3 | 6 | 5 | 4 | 0 | 0 | 8 | 3 | 0 | 0 | 1 | 1 | 1 | 0 | 0 | 1 |
| | Crosswalk (C-D-A) | 0 | 0 | 2 | 0 | 2 | 1 | 0 | 10 | 0 | 0 | 5 | 1 | 2 | 1 | 0 | 1 | 2 | 1 | 0 | 1 |
| ***Eleventh Ave & West 33rd*** | Sidewalk A | 0 | 1 | 1 | 8 | 2 | 0 | 3 | 2 | 0 | 0 | 1 | 3 | 0 | 0 | 1 | 2 | 0 | 1 | 0 | 2 |
| | Sidewalk B | 2 | 2 | 1 | 0 | 10 | 1 | 1 | 9 | 7 | 4 | 3 | 8 | 13 | 1 | 2 | 11 | 0 | 1 | 1 | 2 |
| | Sidewalk C | 2 | 0 | 2 | 2 | 0 | 2 | 3 | 3 | 2 | 1 | 7 | 1 | 2 | 0 | 0 | 3 | 2 | 0 | 2 | 0 |
| | Sidewalk D | 2 | 4 | 1 | 4 | 1 | 2 | 0 | 0 | 0 | 3 | 1 | 0 | 3 | 3 | 0 | 1 | 0 | 1 | 0 | 2 |
| | Corner A & B | 0 | 0 | 0 | 2 | 1 | 0 | 0 | 2 | 0 | 0 | 3 | 4 | 0 | 0 | 2 | 7 | 0 | 0 | 1 | 0 |
| | Corner C & D | 0 | 0 | 0 | 0 | 1 | 0 | 0 | 0 | 0 | 1 | 0 | 0 | 0 | 0 | 1 | 0 | 0 | 2 | 0 | 0 |
| | Crosswalk (A-B-C) | 0 | 0 | 2 | 2 | 1 | 2 | 2 | 2 | 0 | 0 | 5 | 1 | 0 | 0 | 0 | 2 | 0 | 1 | 1 | 0 |
| | Crosswalk (C-D-A) | 2 | 0 | 2 | 8 | 0 | 2 | 0 | 2 | 1 | 1 | 1 | 3 | 0 | 0 | 1 | 1 | 1 | 1 | 1 | 2 |
| ***Eleventh Ave & West 34th*** | Sidewalk A | 4 | 13 | 2 | 3 | 5 | 19 | 1 | 5 | 4 | 6 | 2 | 3 | 11 | 5 | 2 | 1 | 9 | 5 | 8 | 15 |
| | Sidewalk B | 2 | 0 | 7 | 3 | 3 | 3 | 20 | 8 | 4 | 5 | 12 | 6 | 3 | 6 | 1 | 4 | 3 | 5 | 11 | 28 |
| | Sidewalk C | 0 | 0 | 13 | 5 | 12 | 5 | 1 | 3 | 12 | 3 | 5 | 4 | 38 | 0 | 22 | 0 | 4 | 6 | 1 | 4 |
| | Sidewalk D | 0 | 0 | 6 | 3 | 3 | 4 | 14 | 3 | 5 | 1 | 6 | 5 | 2 | 1 | 2 | 3 | 1 | 1 | 1 | 1 |
| | Corner A & B | 1 | 2 | 0 | 0 | 0 | 2 | 1 | 2 | 0 | 0 | 2 | 2 | 2 | 0 | 1 | 0 | 1 | 0 | 2 | 3 |
| | Corner C & D | 0 | 0 | 0 | 0 | 1 | 0 | 1 | 1 | 0 | 2 | 1 | 0 | 0 | 23 | 3 | 2 | 1 | 0 | 0 | 0 |
| | Crosswalk (A-B-C) | 3 | 2 | 12 | 9 | 5 | 13 | 3 | 5 | 5 | 7 | 2 | 4 | 3 | 5 | 1 | 6 | 23 | 9 | 7 | 3 |
| | Crosswalk (C-D-A) | 4 | 5 | 1 | 2 | 14 | 3 | 2 | 4 | 9 | 3 | 3 | 2 | 8 | 1 | 0 | 6 | 8 | 5 | 2 | 3 |
| ***Eleventh Ave & West 35th*** | Sidewalk A | 0 | 0 | 4 | 3 | 0 | 0 | 4 | 6 | 0 | 0 | 5 | 6 | | | | | | | | |
| | Sidewalk B | 4 | 1 | 0 | 0 | 1 | 2 | 1 | 0 | 0 | 3 | 2 | 0 | | | | | | | | |
| | Sidewalk C | 2 | 0 | 0 | 0 | 1 | 8 | 1 | 2 | 0 | 0 | 1 | 0 | | | | | | | | |
| | Sidewalk D | 4 | 3 | 0 | 0 | 4 | 4 | 0 | 0 | 4 | 4 | 0 | 0 | | | | | | | | |
| | Corner A & B | 0 | 0 | 0 | 1 | 0 | 0 | 0 | 1 | 0 | 0 | 2 | 0 | | | | | | | | |
| | Corner C & D | 0 | 1 | 0 | 0 | 0 | 0 | 0 | 0 | 0 | 0 | 0 | 0 | | | | | | | | |
| | Crosswalk (A-B-C) | 0 | 1 | 2 | 1 | 1 | 5 | 1 | 2 | 1 | 2 | 1 | 2 | | | | | | | | |
| | Crosswalk (C-D-A) | 0 | 0 | 4 | 3 | 2 | 2 | 4 | 5 | 0 | 1 | 4 | 6 | | | | | | | | |
| ***Eleventh Ave & West 36th*** | Sidewalk A | 0 | 0 | 4 | 2 | 0 | 0 | 1 | 10 | 0 | 0 | 4 | 5 | | | | | | | | |
| | Sidewalk B | 0 | 2 | 0 | 0 | 3 | 4 | 1 | 1 | 1 | 5 | 1 | 0 | | | | | | | | |
| | Sidewalk C | 4 | 1 | 0 | 1 | 2 | 2 | 1 | 3 | 3 | 1 | 1 | 4 | | | | | | | | |
| | Sidewalk D | 5 | 4 | 0 | 0 | 1 | 5 | 0 | 0 | 6 | 5 | 0 | 0 | | | | | | | | |
| | Corner A & B | 0 | 0 | 1 | 0 | 0 | 0 | 1 | 0 | 0 | 0 | 1 | 0 | | | | | | | | |
| | Corner C & D | 0 | 0 | 0 | 0 | 0 | 0 | 0 | 0 | 1 | 0 | 0 | 0 | | | | | | | | |
| | Crosswalk (A-B-C) | 0 | 1 | 0 | 1 | 0 | 1 | 1 | 1 | 0 | 0 | 2 | 3 | | | | | | | | |
| | Crosswalk (C-D-A) | 3 | 2 | 0 | 0 | 3 | 2 | 0 | 9 | 3 | 0 | 4 | 5 | | | | | | | | |

# Appendix S.5.2

**PEDESTRIAN VOLUMES (SIDEWALKS, CORNERS, AND CROSSWALKS)**
**2003 EXISTING CONDITIONS**

| Intersection | Elements | Weekday AM Peak 15-Min. | | | | Weekday MD Peak 15-Min. | | | | Weekday PM Peak 15-Min. | | | | Special Events Evening Peak 15-Min. | | | | Special Events Sunday Peak 15-Min. | | | |
|---|---|---|---|---|---|---|---|---|---|---|---|---|---|---|---|---|---|---|---|---|---|
| *Eleventh Ave & West 37th* | Sidewalk A | 2 | 2 | 0 | 1 | 1 | 1 | 0 | 0 | 0 | 0 | 0 | 3 | | | | | | | | |
| | Sidewalk B | 0 | 0 | 0 | 0 | 2 | 15 | 3 | 5 | 6 | 8 | 0 | 0 | | | | | | | | |
| | Sidewalk C | 1 | 0 | 0 | 0 | 2 | 4 | 0 | 0 | 0 | 1 | 0 | 0 | | | | | | | | |
| | Sidewalk D | 0 | 0 | 0 | 0 | 4 | 3 | 0 | 3 | 0 | 7 | 1 | 3 | | | | | | | | |
| | Corner A & B | 0 | 1 | 0 | 0 | 0 | 0 | 0 | 1 | 0 | 0 | 4 | 2 | | | | | | | | |
| | Corner C & D | 0 | 1 | 0 | 0 | 1 | 0 | 0 | 0 | 1 | 0 | 0 | 0 | | | | | | | | |
| | Crosswalk (A-B-C) | 0 | 2 | 1 | 0 | 2 | 0 | 0 | 7 | 2 | 1 | 1 | 1 | | | | | | | | |
| | Crosswalk (C-D-A) | 0 | 0 | 1 | 3 | 6 | 9 | 0 | 0 | 0 | 0 | 0 | 0 | | | | | | | | |
| *Eleventh Ave & West 38th* | Sidewalk A | 0 | 0 | 1 | 2 | 1 | 2 | 0 | 0 | 0 | 0 | 0 | 0 | | | | | | | | |
| | Sidewalk B | 0 | 0 | 2 | 2 | 0 | 0 | 0 | 1 | 0 | 0 | 0 | 0 | | | | | | | | |
| | Sidewalk C | 0 | 1 | 0 | 0 | 0 | 5 | 0 | 0 | 0 | 2 | 0 | 0 | | | | | | | | |
| | Sidewalk D | 0 | 0 | 4 | 0 | 0 | 0 | 3 | 2 | 0 | 0 | 11 | 1 | | | | | | | | |
| | Corner A & B | 0 | 0 | 0 | 0 | 0 | 0 | 0 | 0 | 0 | 0 | 0 | 0 | | | | | | | | |
| | Corner C & D | 0 | 0 | 0 | 0 | 0 | 0 | 0 | 0 | 0 | 0 | 0 | 0 | | | | | | | | |
| | Crosswalk (A-B-C) | 0 | 0 | 0 | 0 | 13 | 2 | 6 | 3 | 0 | 0 | 0 | 0 | | | | | | | | |
| | Crosswalk (C-D-A) | 0 | 0 | 0 | 2 | 1 | 0 | 4 | 2 | 0 | 8 | 0 | 0 | | | | | | | | |
| *Eleventh Ave & West 39th* | Sidewalk A | 0 | 1 | 2 | 75 | 5 | 7 | 5 | 2 | 2 | 2 | 1 | 2 | 1 | 0 | 0 | 0 | 0 | 0 | 1 | 5 |
| | Sidewalk B | 1 | 2 | 0 | 0 | 0 | 0 | 1 | 19 | 3 | 1 | 0 | 1 | 0 | 0 | 5 | 0 | 0 | 0 | 4 | 0 |
| | Sidewalk C | 0 | 5 | 5 | 3 | 0 | 1 | 0 | 0 | 0 | 1 | 0 | 0 | 3 | 4 | 1 | 0 | 11 | 4 | 0 | 0 |
| | Sidewalk D | 1 | 39 | 1 | 0 | 6 | 0 | 0 | 0 | 0 | 1 | 1 | 1 | 0 | 0 | 1 | 0 | 13 | 5 | 3 | 0 |
| | Corner A & B | 0 | 1 | 0 | 1 | 0 | 0 | 0 | 0 | 5 | 0 | 5 | 0 | 8 | 4 | 0 | 3 | 0 | 0 | 0 | 0 |
| | Corner C & D | 0 | 1 | 0 | 1 | 0 | 0 | 0 | 0 | 4 | 0 | 2 | 0 | 0 | 4 | 0 | 0 | 2 | 0 | 0 | 0 |
| | Crosswalk (A-B-C) | 0 | 1 | 4 | 0 | 14 | 5 | 3 | 0 | 0 | 0 | 2 | 1 | 0 | 0 | 0 | 0 | 10 | 0 | 2 | 0 |
| | Crosswalk (C-D-A) | 0 | 0 | 3 | 73 | 0 | 2 | 5 | 3 | 0 | 0 | 3 | 0 | 0 | 8 | 8 | 4 | 16 | 1 | 12 | 6 |
| *Eleventh Ave & West 40th* | Sidewalk A | 4 | 7 | 12 | 15 | 3 | 0 | 2 | 1 | 5 | 0 | 63 | 10 | | | | | | | | |
| | Sidewalk B | 4 | 1 | 1 | 2 | 1 | 2 | 3 | 2 | 21 | 0 | 0 | 0 | | | | | | | | |
| | Sidewalk C | 0 | 1 | 0 | 0 | 0 | 1 | 2 | 3 | 1 | 6 | 10 | 6 | | | | | | | | |
| | Sidewalk D | 7 | 8 | 0 | 1 | 11 | 16 | 4 | 4 | 97 | 2 | 1 | 0 | | | | | | | | |
| | Corner A & B | 8 | 11 | 7 | 6 | 0 | 6 | 0 | 3 | 0 | 0 | 0 | 0 | | | | | | | | |
| | Corner C & D | 6 | 6 | 6 | 6 | 0 | 3 | 0 | 3 | 0 | 0 | 0 | 0 | | | | | | | | |
| | Crosswalk (A-B-C) | 0 | 1 | 1 | 0 | 3 | 0 | 0 | 5 | 0 | 0 | 0 | 0 | | | | | | | | |
| | Crosswalk (C-D-A) | 0 | 0 | 10 | 6 | 0 | 5 | 8 | 3 | 8 | 10 | 17 | 0 | | | | | | | | |
| *Eleventh Ave & West 42nd* | Sidewalk A | 0 | 1 | 0 | 20 | 3 | 7 | 0 | 1 | 20 | 0 | 0 | 37 | 17 | 1 | 0 | 6 | 6 | 3 | 13 | 4 |
| | Sidewalk B | 10 | 15 | 0 | 0 | 4 | 3 | 1 | 17 | 0 | 12 | 45 | 0 | 0 | 17 | 23 | 0 | 20 | 9 | 7 | 24 |
| | Sidewalk C | 32 | 5 | 1 | 8 | 14 | 10 | 13 | 4 | 21 | 19 | 1 | 0 | 10 | 13 | 4 | 4 | 15 | 22 | 7 | 1 |
| | Sidewalk D | 10 | 0 | 23 | 4 | 4 | 1 | 19 | 11 | 4 | 0 | 19 | 14 | 0 | 2 | 13 | 5 | 12 | 1 | 25 | 25 |
| | Corner A & B | 0 | 0 | 0 | 0 | 0 | 0 | 0 | 0 | 0 | 0 | 0 | 0 | 0 | 5 | 9 | 0 | 2 | 0 | 5 | 10 |
| | Corner C & D | 3 | 0 | 0 | 0 | 2 | 5 | 4 | 1 | 1 | 1 | 6 | 0 | 2 | 2 | 0 | 0 | 2 | 3 | 0 | 1 |
| | Crosswalk (A-B-C) | 1 | 2 | 4 | 24 | 6 | 15 | 15 | 4 | 35 | 2 | 1 | 10 | 18 | 3 | 4 | 18 | 9 | 11 | 7 | 8 |
| | Crosswalk (C-D-A) | 27 | 1 | 32 | 7 | 14 | 7 | 2 | 2 | 23 | 14 | 5 | 12 | 16 | 14 | 0 | 2 | 21 | 20 | 13 | 0 |
| *Tenth Ave & W. 29th St* | Sidewalk A | 4 | 5 | 6 | 8 | 12 | 3 | 9 | 13 | 4 | 4 | 4 | 9 | | | | | | | | |
| | Sidewalk B | 1 | 5 | 2 | 5 | 1 | 3 | 3 | 1 | 8 | 6 | 4 | 8 | | | | | | | | |
| | Sidewalk C | 4 | 7 | 5 | 3 | 24 | 10 | 10 | 6 | 7 | 4 | 3 | 14 | | | | | | | | |
| | Sidewalk D | 7 | 3 | 5 | 9 | 9 | 1 | 3 | 4 | 4 | 4 | 8 | 10 | | | | | | | | |
| | Corner A & B | 3 | 4 | 1 | 2 | 2 | 5 | 1 | 2 | 6 | 7 | 3 | 2 | | | | | | | | |
| | Corner C & D | 1 | 2 | 5 | 6 | 3 | 1 | 2 | 5 | 5 | 1 | 7 | 4 | | | | | | | | |
| | Crosswalk (A-B-C) | 3 | 6 | 3 | 8 | 4 | 2 | 7 | 22 | 1 | 9 | 6 | 3 | | | | | | | | |
| | Crosswalk (C-D-A) | 7 | 4 | 6 | 2 | 2 | 8 | 4 | 14 | 4 | 6 | 8 | 6 | | | | | | | | |
| *Tenth Ave & W. 30th St* | Sidewalk A | 2 | 0 | 2 | 6 | 1 | 5 | 5 | 9 | 2 | 6 | 8 | 8 | 0 | 1 | 4 | 4 | 2 | 1 | 8 | 4 |
| | Sidewalk B | 0 | 1 | 0 | 1 | 14 | 10 | 1 | 0 | 4 | 4 | 0 | 4 | 2 | 4 | 0 | 0 | 2 | 0 | 3 | 0 |
| | Sidewalk C | 1 | 8 | 6 | 9 | 6 | 4 | 7 | 2 | 8 | 1 | 3 | 5 | 4 | 2 | 2 | 7 | 1 | 3 | 3 | 0 |
| | Sidewalk D | 4 | 5 | 4 | 2 | 6 | 6 | 7 | 2 | 6 | 3 | 7 | 6 | 3 | 6 | 5 | 3 | 5 | 0 | 2 | 6 |
| | Corner A & B | 1 | 1 | 0 | 0 | 2 | 2 | 0 | 0 | 2 | 2 | 0 | 0 | 0 | 0 | 0 | 0 | 1 | 1 | 0 | 0 |
| | Corner C & D | 0 | 0 | 1 | 0 | 0 | 0 | 0 | 3 | 0 | 0 | 1 | 0 | 2 | 0 | 1 | 1 | 0 | 1 | 0 | 0 |
| | Crosswalk (A-B-C) | 0 | 1 | 6 | 8 | 0 | 0 | 6 | 4 | 0 | 5 | 0 | 3 | 0 | 1 | 2 | 4 | 3 | 0 | 2 | 0 |
| | Crosswalk (C-D-A) | 3 | 7 | 2 | 4 | 2 | 5 | 4 | 3 | 8 | 3 | 9 | 4 | 2 | 2 | 4 | 4 | 1 | 2 | 7 | 3 |
| *Tenth Ave & W. 31st St* | Sidewalk A | 0 | 0 | 7 | 1 | 0 | 0 | 2 | 7 | 0 | 0 | 14 | 13 | 0 | 0 | 4 | 2 | 0 | 0 | 9 | 4 |
| | Sidewalk B | 15 | 11 | 4 | 6 | 12 | 25 | 13 | 8 | 8 | 14 | 1 | 6 | 1 | 5 | 0 | 0 | 3 | 2 | 0 | 0 |
| | Sidewalk C | 5 | 4 | 9 | 7 | 8 | 3 | 2 | 14 | 9 | 3 | 7 | 16 | 2 | 4 | 2 | 5 | 3 | 3 | 4 | 2 |
| | Sidewalk D | 7 | 1 | 0 | 0 | 9 | 7 | 0 | 0 | 15 | 13 | 0 | 0 | 2 | 3 | 0 | 0 | 0 | 0 | 0 | 0 |
| | Corner A & B | 0 | 0 | 4 | 6 | 0 | 0 | 13 | 8 | 0 | 0 | 1 | 6 | 0 | 0 | 0 | 0 | 0 | 0 | 0 | 1 |
| | Corner C & D | 0 | 2 | 0 | 0 | 2 | 1 | 0 | 0 | 3 | 5 | 0 | 0 | 1 | 1 | 0 | 0 | 0 | 1 | 0 | 0 |
| | Crosswalk (A-B-C) | 0 | 0 | 9 | 7 | 3 | 0 | 2 | 14 | 0 | 0 | 2 | 13 | 0 | 3 | 1 | 3 | 0 | 0 | 2 | 2 |
| | Crosswalk (C-D-A) | 2 | 0 | 7 | 1 | 5 | 0 | 5 | 7 | 1 | 0 | 14 | 14 | 2 | 2 | 3 | 4 | 0 | 0 | 3 | 3 |
| *Tenth Ave & W. 33rd St* | Sidewalk A | 1 | 10 | 14 | 31 | 78 | 61 | 5 | 10 | 7 | 10 | 3 | 14 | 1 | 5 | 11 | 0 | 3 | 3 | 9 | 7 |
| | Sidewalk B | 13 | 15 | 12 | 12 | 17 | 15 | 20 | 13 | 15 | 6 | 8 | 4 | 8 | 8 | 1 | 4 | 1 | 7 | 3 | 4 |
| | Sidewalk C | 3 | 6 | 7 | 7 | 9 | 7 | 3 | 4 | 13 | 7 | 20 | 2 | 4 | 15 | 5 | 4 | 4 | 7 | 1 | 6 |
| | Sidewalk D | 3 | 8 | 17 | 7 | 6 | 9 | 11 | 16 | 7 | 4 | 6 | 10 | 13 | 1 | 0 | 2 | 7 | 7 | 1 | 5 |
| | Corner A & B | 0 | 2 | 1 | 3 | 11 | 11 | 11 | 4 | 5 | 2 | 2 | 5 | 0 | 0 | 0 | 0 | 0 | 2 | 2 | 2 |
| | Corner C & D | 1 | 6 | 2 | 0 | 4 | 1 | 8 | 2 | 5 | 4 | 1 | 1 | 1 | 1 | 1 | 0 | 5 | 1 | 0 | 0 |
| | Crosswalk (A-B-C) | 10 | 17 | 15 | 9 | 50 | 47 | 28 | 20 | 3 | 6 | 12 | 10 | 2 | 11 | 15 | 4 | 0 | 2 | 0 | 2 |
| | Crosswalk (C-D-A) | 7 | 9 | 12 | 3 | 17 | 7 | 12 | 49 | 5 | 16 | 14 | 11 | 2 | 5 | 2 | 1 | 0 | 2 | 7 | 7 |
| *Tenth Ave & W. 34th St* | Sidewalk A | 13 | 77 | 12 | 11 | 35 | 32 | 24 | 33 | 45 | 6 | 9 | 28 | 15 | 21 | 6 | 11 | 8 | 12 | 7 | 5 |
| | Sidewalk B | 9 | 17 | 1 | 71 | 19 | 22 | 23 | 26 | 16 | 11 | 40 | 8 | 10 | 22 | 20 | 24 | 4 | 5 | 13 | 17 |
| | Sidewalk C | 26 | 100 | 25 | 15 | 69 | 44 | 51 | 33 | 79 | 18 | 24 | 6 | 44 | 23 | 11 | 9 | 8 | 14 | 7 | 6 |
| | Sidewalk D | 9 | 11 | 8 | 60 | 15 | 25 | 49 | 27 | 7 | 8 | 74 | 17 | 8 | 12 | 34 | 16 | 3 | 5 | 6 | 5 |
| | Corner A & B | 6 | 3 | 2 | 7 | 3 | 4 | 1 | 1 | 7 | 2 | 12 | 6 | 1 | 9 | 4 | 5 | 1 | 0 | 2 | 1 |
| | Corner C & D | 12 | 9 | 3 | 2 | 33 | 20 | 4 | 8 | 13 | 12 | 6 | 9 | 4 | 5 | 1 | 1 | 2 | 4 | 0 | 2 |
| | Crosswalk (A-B-C) | 2 | 76 | 12 | 15 | 38 | 32 | 21 | 19 | 47 | 11 | 20 | 10 | 12 | 13 | 10 | 16 | 11 | 14 | 8 | 3 |
| | Crosswalk (C-D-A) | 10 | 59 | 12 | 12 | 45 | 38 | 25 | 28 | 72 | 12 | 16 | 19 | 33 | 24 | 4 | 6 | 8 | 7 | 4 | 6 |
| *Tenth Ave & W. 35th St* | Sidewalk A | 0 | 29 | 6 | 5 | 29 | 12 | 7 | 21 | 36 | 0 | 3 | 25 | | | | | | | | |
| | Sidewalk B | 2 | 3 | 0 | 42 | 16 | 20 | 18 | 17 | 26 | 32 | 48 | 6 | | | | | | | | |
| | Sidewalk C | 4 | 18 | 0 | 0 | 1 | 0 | 22 | 13 | 1 | 0 | 23 | 17 | | | | | | | | |
| | Sidewalk D | 15 | 5 | 5 | 23 | 11 | 10 | 17 | 16 | 8 | 20 | 11 | 10 | | | | | | | | |
| | Corner A & B | 0 | 0 | 1 | 0 | 15 | 9 | 4 | 1 | 0 | 1 | 10 | 4 | | | | | | | | |
| | Corner C & D | 0 | 0 | 6 | 0 | 0 | 0 | 9 | 11 | 0 | 0 | 2 | 3 | | | | | | | | |
| | Crosswalk (A-B-C) | 0 | 56 | 3 | 0 | 23 | 19 | 18 | 15 | 45 | 5 | 18 | 15 | | | | | | | | |
| | Crosswalk (C-D-A) | 6 | 20 | 6 | 7 | 12 | 19 | 16 | 33 | 21 | 11 | 8 | 35 | | | | | | | | |

# Appendix S.5.2

**PEDESTRIAN VOLUMES (SIDEWALKS, CORNERS, AND CROSSWALKS)**
**2003 EXISTING CONDITIONS**

| Intersection | Elements | Weekday AM Peak 15-Min. | | | | Weekday MD Peak 15-Min. | | | | Weekday PM Peak 15-Min. | | | | Special Events Evening Peak 15-Min. | | | | Special Events Sunday Peak 15-Min. | | | |
|---|---|---|---|---|---|---|---|---|---|---|---|---|---|---|---|---|---|---|---|---|---|
| *Tenth Ave & W. 36th St* | Sidewalk A | 1 | 11 | 5 | 2 | 10 | 10 | 12 | 20 | 0 | 0 | 11 | 15 | | | | | | | | |
| | Sidewalk B | 9 | 2 | 1 | 11 | 5 | 16 | 10 | 2 | 14 | 13 | 10 | 2 | | | | | | | | |
| | Sidewalk C | 0 | 17 | 12 | 2 | 16 | 21 | 8 | 11 | 23 | 8 | 16 | 16 | | | | | | | | |
| | Sidewalk D | 5 | 3 | 0 | 12 | 13 | 12 | 8 | 16 | 11 | 18 | 20 | 3 | | | | | | | | |
| | Corner A & B | 0 | 0 | 0 | 0 | 2 | 8 | 7 | 0 | 0 | 0 | 1 | 1 | | | | | | | | |
| | Corner C & D | 0 | 0 | 0 | 0 | 1 | 2 | 3 | 0 | 1 | 0 | 0 | 3 | | | | | | | | |
| | Crosswalk (A-B-C) | 0 | 12 | 76 | 25 | 15 | 10 | 9 | 3 | 20 | 3 | 15 | 18 | | | | | | | | |
| | Crosswalk (C-D-A) | 13 | 55 | 38 | 29 | 13 | 18 | 12 | 18 | 82 | 1 | 13 | 42 | | | | | | | | |
| *Tenth Ave & W. 37th St* | Sidewalk A | 8 | 4 | 5 | 2 | 11 | 10 | 4 | 12 | 3 | 10 | 9 | 5 | | | | | | | | |
| | Sidewalk B | 17 | 7 | 4 | 15 | 20 | 14 | 2 | 4 | 14 | 8 | 11 | 1 | | | | | | | | |
| | Sidewalk C | 12 | 20 | 7 | 9 | 13 | 21 | 1 | 9 | 10 | 7 | 13 | 11 | | | | | | | | |
| | Sidewalk D | 0 | 3 | 8 | 8 | 6 | 10 | 7 | 5 | 4 | 9 | 5 | 9 | | | | | | | | |
| | Corner A & B | 1 | 1 | 3 | 2 | 2 | 2 | 5 | 1 | 5 | 2 | 6 | 8 | | | | | | | | |
| | Corner C & D | 9 | 8 | 3 | 1 | 8 | 5 | 2 | 2 | 0 | 1 | 3 | 4 | | | | | | | | |
| | Crosswalk (A-B-C) | 8 | 16 | 9 | 28 | 8 | 7 | 13 | 15 | 15 | 7 | 7 | 10 | | | | | | | | |
| | Crosswalk (C-D-A) | 5 | 3 | 13 | 10 | 13 | 11 | 11 | 18 | 7 | 13 | 4 | 10 | | | | | | | | |
| *Tenth Ave & W. 38th St* | Sidewalk A | 7 | 5 | 6 | 10 | 7 | 5 | 4 | 10 | 24 | 6 | 6 | 7 | | | | | | | | |
| | Sidewalk B | 6 | 9 | 3 | 11 | 16 | 9 | 15 | 20 | 6 | 7 | 8 | 7 | | | | | | | | |
| | Sidewalk C | 0 | 2 | 4 | 3 | 4 | 9 | 5 | 9 | 6 | 6 | 12 | 6 | | | | | | | | |
| | Sidewalk D | 7 | 5 | 2 | 2 | 8 | 9 | 8 | 7 | 12 | 3 | 10 | 3 | | | | | | | | |
| | Corner A & B | 0 | 2 | 0 | 3 | 1 | 5 | 5 | 6 | 1 | 1 | 0 | 1 | | | | | | | | |
| | Corner C & D | 0 | 0 | 1 | 0 | 3 | 4 | 2 | 3 | 0 | 1 | 2 | 2 | | | | | | | | |
| | Crosswalk (A-B-C) | 5 | 3 | 0 | 7 | 12 | 16 | 8 | 8 | 10 | 4 | 12 | 6 | | | | | | | | |
| | Crosswalk (C-D-A) | 0 | 2 | 1 | 10 | 7 | 10 | 8 | 5 | 12 | 3 | 10 | 6 | | | | | | | | |
| *Tenth Ave & W. 39th St* | Sidewalk A | 0 | 0 | 2 | 3 | 1 | 1 | 3 | 4 | 0 | 0 | 2 | 2 | | | | | | | | |
| | Sidewalk B | 5 | 5 | 0 | 0 | 5 | 8 | 1 | 1 | 6 | 4 | 0 | 1 | | | | | | | | |
| | Sidewalk C | 0 | 9 | 10 | 9 | 5 | 2 | 7 | 7 | 9 | 0 | 18 | 2 | | | | | | | | |
| | Sidewalk D | 2 | 5 | 0 | 2 | 9 | 5 | 5 | 3 | 4 | 3 | 6 | 3 | | | | | | | | |
| | Corner A & B | 0 | 0 | 0 | 0 | 0 | 0 | 1 | 0 | 0 | 0 | 0 | 0 | | | | | | | | |
| | Corner C & D | 7 | 0 | 0 | 0 | 1 | 1 | 2 | 0 | 0 | 2 | 1 | 0 | | | | | | | | |
| | Crosswalk (A-B-C) | 0 | 0 | 10 | 4 | 1 | 1 | 6 | 8 | 0 | 1 | 14 | 2 | | | | | | | | |
| | Crosswalk (C-D-A) | 0 | 6 | 2 | 3 | 2 | 3 | 3 | 4 | 12 | 3 | 10 | 6 | | | | | | | | |
| *Tenth Ave & W. 40th St* | Sidewalk A | 4 | 2 | 0 | 2 | 12 | 3 | 10 | 6 | 3 | 7 | 16 | 5 | | | | | | | | |
| | Sidewalk B | 11 | 19 | 1 | 6 | 9 | 11 | 3 | 8 | 17 | 18 | 12 | 13 | | | | | | | | |
| | Sidewalk C | 1 | 3 | 8 | 19 | 4 | 4 | 10 | 15 | 3 | 0 | 12 | 10 | | | | | | | | |
| | Sidewalk D | 1 | 2 | 1 | 3 | 3 | 2 | 3 | 1 | 17 | 4 | 0 | 0 | | | | | | | | |
| | Corner A & B | 0 | 0 | 0 | 3 | 5 | 3 | 6 | 4 | 0 | 2 | 7 | 9 | | | | | | | | |
| | Corner C & D | 1 | 0 | 1 | 0 | 3 | 4 | 2 | 4 | 0 | 2 | 0 | 0 | | | | | | | | |
| | Crosswalk (A-B-C) | 3 | 3 | 8 | 15 | 4 | 1 | 0 | 0 | 4 | 6 | 10 | 10 | | | | | | | | |
| | Crosswalk (C-D-A) | 1 | 2 | 0 | 2 | 1 | 2 | 3 | 2 | 2 | 0 | 15 | 2 | | | | | | | | |
| *Tenth Ave & W. 41st St* | Sidewalk A | 5 | 10 | 16 | 20 | 4 | 9 | 5 | 9 | 5 | 8 | 14 | 10 | | | | | | | | |
| | Sidewalk B | 15 | 22 | 9 | 3 | 24 | 20 | 8 | 7 | 30 | 18 | 5 | 8 | | | | | | | | |
| | Sidewalk C | 0 | 0 | 6 | 14 | 1 | 8 | 21 | 17 | 2 | 11 | 27 | 17 | | | | | | | | |
| | Sidewalk D | 3 | 10 | 0 | 0 | 4 | 4 | 1 | 7 | 18 | 8 | 2 | 7 | | | | | | | | |
| | Corner A & B | 3 | 4 | 1 | 1 | 2 | 6 | 3 | 2 | 3 | 4 | 3 | 0 | | | | | | | | |
| | Corner C & D | 0 | 0 | 0 | 0 | 3 | 1 | 0 | 0 | 7 | 1 | 1 | 2 | | | | | | | | |
| | Crosswalk (A-B-C) | 14 | 3 | 7 | 19 | 7 | 3 | 24 | 17 | 12 | 5 | 29 | 11 | | | | | | | | |
| | Crosswalk (C-D-A) | 0 | 0 | 3 | 10 | 7 | 5 | 4 | 3 | 6 | 5 | 11 | 6 | | | | | | | | |
| *Tenth Ave & W. 42nd St* | Sidewalk A | 45 | 40 | 11 | 8 | 54 | 12 | 21 | 27 | 99 | 30 | 18 | 35 | | | | | | | | |
| | Sidewalk B | 19 | 38 | 62 | 55 | 31 | 25 | 34 | 34 | 25 | 60 | 55 | 75 | | | | | | | | |
| | Sidewalk C | 64 | 30 | 18 | 24 | 36 | 37 | 14 | 12 | 71 | 37 | 21 | 23 | | | | | | | | |
| | Sidewalk D | 35 | 15 | 19 | 11 | 19 | 15 | 28 | 26 | 13 | 23 | 34 | 14 | | | | | | | | |
| | Corner A & B | 15 | 10 | 12 | 9 | 13 | 10 | 20 | 9 | 10 | 7 | 21 | 24 | | | | | | | | |
| | Corner C & D | 9 | 3 | 4 | 3 | 0 | 5 | 0 | 0 | 21 | 64 | 1 | 1 | | | | | | | | |
| | Crosswalk (A-B-C) | 50 | 42 | 17 | 32 | 50 | 31 | 19 | 24 | 66 | 54 | 15 | 52 | | | | | | | | |
| | Crosswalk (C-D-A) | 46 | 19 | 16 | 17 | 35 | 31 | 14 | 21 | 42 | 28 | 18 | 21 | | | | | | | | |
| *Dyer Ave & W. 42nd St* | Sidewalk A | 80 | 66 | 0 | 0 | 55 | 46 | 0 | 0 | 138 | 78 | 0 | 0 | | | | | | | | |
| | Sidewalk B | 0 | 0 | 100 | 64 | 0 | 0 | 69 | 52 | 0 | 0 | 143 | 117 | | | | | | | | |
| | Sidewalk C | 27 | 48 | 3 | 5 | 40 | 50 | 1 | 2 | 66 | 52 | 11 | 5 | | | | | | | | |
| | Sidewalk D | 1 | 0 | 37 | 28 | 1 | 4 | 40 | 42 | 3 | 1 | 71 | 38 | | | | | | | | |
| | Corner A & B | 0 | 0 | 0 | 0 | 0 | 0 | 0 | 0 | 0 | 0 | 0 | 0 | | | | | | | | |
| | Corner C & D | 3 | 0 | 0 | 0 | 0 | 1 | 0 | 0 | 0 | 4 | 0 | 0 | | | | | | | | |
| | Crosswalk (A-B-C) | 95 | 64 | 4 | 5 | 70 | 53 | 1 | 5 | 142 | 118 | 4 | 7 | | | | | | | | |
| | Crosswalk (C-D-A) | 32 | 35 | 5 | 2 | 41 | 42 | 3 | 2 | 71 | 67 | 9 | 10 | | | | | | | | |
| *Ninth Ave & W. 30th St* | Sidewalk A | 7 | 6 | 186 | 15 | 3 | 1 | 24 | 18 | 5 | 4 | 18 | 32 | 5 | 0 | 23 | 5 | 6 | 6 | 81 | 3 |
| | Sidewalk B | 108 | 36 | 21 | 23 | 73 | 52 | 4 | 13 | 41 | 59 | 10 | 26 | 32 | 35 | 5 | 14 | 67 | 37 | 18 | 20 |
| | Sidewalk C | 40 | 22 | 31 | 38 | 22 | 5 | 54 | 32 | 18 | 36 | 37 | 40 | 8 | 10 | 23 | 26 | 66 | 9 | 47 | 26 |
| | Sidewalk D | 47 | 30 | 238 | 24 | 29 | 15 | 44 | 17 | 20 | 21 | 18 | 65 | 13 | 5 | 21 | 10 | 10 | 46 | 113 | 10 |
| | Corner A & B | 7 | 0 | 2 | 12 | 3 | 1 | 4 | 5 | 3 | 4 | 6 | 9 | 5 | 0 | 1 | 5 | 1 | 13 | 5 | 13 |
| | Corner C & D | 15 | 7 | 6 | 15 | 2 | 8 | 4 | 2 | 4 | 5 | 11 | 4 | 2 | 3 | 2 | 2 | 0 | 17 | 12 | 46 |
| | Crosswalk (A-B-C) | 49 | 16 | 58 | 23 | 8 | 10 | 39 | 46 | 9 | 9 | 37 | 57 | 5 | 10 | 16 | 27 | 25 | 7 | 36 | 21 |
| | Crosswalk (C-D-A) | 78 | 10 | 198 | 27 | 26 | 10 | 33 | 13 | 13 | 39 | 15 | 32 | 9 | 8 | 16 | 5 | 80 | 9 | 45 | 8 |
| *Ninth Ave & W. 31st St* | Sidewalk A | 12 | 26 | 53 | 53 | 9 | 18 | 33 | 32 | 3 | 3 | 19 | 24 | 3 | 4 | 7 | 18 | 31 | 20 | 16 | 7 |
| | Sidewalk B | 48 | 35 | 43 | 11 | 5 | 7 | 20 | 50 | 40 | 30 | 14 | 6 | 14 | 21 | 1 | 2 | 102 | 7 | 36 | 75 |
| | Sidewalk C | 84 | 124 | 111 | 32 | 42 | 43 | 9 | 8 | 81 | 33 | 75 | 49 | 15 | 12 | 26 | 27 | 11 | 4 | 20 | 7 |
| | Sidewalk D | 15 | 14 | 32 | 46 | 43 | 31 | 77 | 51 | 17 | 15 | 57 | 4 | 7 | 20 | 5 | 2 | 14 | 8 | 0 | 5 |
| | Corner A & B | 4 | 10 | 5 | 28 | 1 | 0 | 9 | 5 | 38 | 112 | 38 | 112 | 2 | 0 | 0 | 1 | 5 | 1 | 9 | 57 |
| | Corner C & D | 44 | 45 | 4 | 9 | 9 | 2 | 47 | 50 | 32 | 110 | 16 | 66 | 7 | 9 | 0 | 0 | 2 | 3 | 3 | 3 |
| | Crosswalk (A-B-C) | 5 | 5 | 33 | 66 | 20 | 33 | 5 | 4 | 8 | 8 | 22 | 24 | 0 | 1 | 12 | 22 | 29 | 20 | 49 | 1 |
| | Crosswalk (C-D-A) | 51 | 73 | 45 | 18 | 40 | 45 | 33 | 29 | 40 | 9 | 14 | 20 | 7 | 3 | 5 | 20 | 7 | 18 | 6 | 2 |
| *Ninth Ave & W. 33rd St* | Sidewalk A | 10 | 84 | 25 | 81 | 20 | 49 | 37 | 88 | 6 | 5 | 0 | 1 | 10 | 6 | 18 | 12 | 3 | 14 | 15 | 20 |
| | Sidewalk B | 48 | 39 | 25 | 115 | 63 | 62 | 80 | 137 | 15 | 20 | 19 | 11 | 38 | 39 | 13 | 10 | 79 | 77 | 34 | 36 |
| | Sidewalk C | 41 | 300 | 31 | 22 | 82 | 63 | 63 | 84 | 39 | 4 | 2 | 33 | 40 | 9 | 23 | 21 | 28 | 9 | 54 | 26 |
| | Sidewalk D | 22 | 32 | 33 | 264 | 75 | 118 | 36 | 32 | 1 | 0 | 6 | 4 | 13 | 5 | 54 | 9 | 12 | 15 | 3 | 18 |
| | Corner A & B | 2 | 27 | 13 | 35 | 2 | 5 | 22 | 36 | 92 | 77 | 77 | 68 | 5 | 0 | 8 | 7 | 4 | 1 | 32 | 33 |
| | Corner C & D | 12 | 6 | 1 | 4 | 11 | 31 | 18 | 28 | 64 | 157 | 57 | 51 | 1 | 2 | 0 | 1 | 3 | 4 | 0 | 2 |
| | Crosswalk (A-B-C) | 20 | 128 | 52 | 26 | 68 | 72 | 43 | 124 | 5 | 7 | 41 | 94 | 9 | 10 | 20 | 34 | 18 | 16 | 41 | 53 |
| | Crosswalk (C-D-A) | 11 | 286 | 22 | 70 | 44 | 48 | 78 | 81 | 150 | 22 | 5 | 13 | 21 | 18 | 13 | 2 | 16 | 7 | 25 | 13 |

# Appendix S.5.2

**PEDESTRIAN VOLUMES (SIDEWALKS, CORNERS, AND CROSSWALKS)**
**2003 EXISTING CONDITIONS**

| Intersection | Elements | Weekday AM Peak 15-Min. | | | | Weekday MD Peak 15-Min. | | | | Weekday PM Peak 15-Min. | | | | Special Events Evening Peak 15-Min. | | | | Special Events Sunday Peak 15-Min. | | | |
|---|---|---|---|---|---|---|---|---|---|---|---|---|---|---|---|---|---|---|---|---|---|
| ***Ninth Ave & W. 34th St*** | Sidewalk A | 47 | 68 | 60 | 19 | 93 | 107 | 92 | 95 | 77 | 62 | 33 | 58 | 27 | 23 | 19 | 13 | 25 | 21 | 7 | 16 |
| | Sidewalk B | 60 | 65 | 22 | 111 | 52 | 35 | 80 | 78 | 118 | 96 | 165 | 57 | 27 | 61 | 37 | 67 | 47 | 43 | 61 | 57 |
| | Sidewalk C | 62 | 123 | 18 | 48 | 132 | 120 | 128 | 109 | 247 | 52 | 69 | 104 | 73 | 61 | 42 | 36 | 97 | 76 | 89 | 101 |
| | Sidewalk D | 27 | 48 | 40 | 137 | 66 | 181 | 124 | 92 | 46 | 41 | 176 | 28 | 21 | 13 | 49 | 23 | 25 | 22 | 46 | 33 |
| | Corner A & B | 140 | 186 | 132 | 184 | 32 | 39 | 16 | 12 | 84 | 164 | 80 | 158 | 1 | 6 | 23 | 14 | 1 | 4 | 11 | 8 |
| | Corner C & D | 123 | 124 | 110 | 108 | 56 | 69 | 41 | 69 | 61 | 131 | 51 | 103 | 19 | 23 | 5 | 4 | 41 | 48 | 9 | 6 |
| | Crosswalk (A-B-C) | 43 | 99 | 42 | 91 | 64 | 77 | 80 | 75 | 221 | 42 | 84 | 137 | 24 | 31 | 35 | 39 | 34 | 32 | 73 | 59 |
| | Crosswalk (C-D-A) | 41 | 191 | 27 | 57 | 84 | 111 | 64 | 98 | 182 | 68 | 59 | 43 | 34 | 42 | 22 | 12 | 53 | 47 | 9 | 16 |
| ***Ninth Ave & W. 37th St*** | Sidewalk A | 14 | 12 | 25 | 39 | 19 | 19 | 14 | 35 | 57 | 11 | 63 | 18 | | | | | | | | |
| | Sidewalk B | 56 | 103 | 13 | 12 | 103 | 102 | 19 | 30 | 139 | 89 | 46 | 14 | | | | | | | | |
| | Sidewalk C | 21 | 24 | 71 | 102 | 17 | 23 | 97 | 59 | 39 | 19 | 185 | 59 | | | | | | | | |
| | Sidewalk D | 15 | 27 | 9 | 14 | 31 | 26 | 28 | 8 | 21 | 29 | 50 | 6 | | | | | | | | |
| | Corner A & B | 6 | 7 | 8 | 6 | 9 | 9 | 13 | 12 | 13 | 4 | 6 | 6 | | | | | | | | |
| | Corner C & D | 13 | 13 | 4 | 1 | 8 | 8 | 2 | 3 | 5 | 8 | 0 | 6 | | | | | | | | |
| | Crosswalk (A-B-C) | 7 | 8 | 56 | 89 | 15 | 22 | 86 | 66 | 72 | 15 | 186 | 67 | | | | | | | | |
| | Crosswalk (C-D-A) | 10 | 8 | 24 | 30 | 30 | 8 | 16 | 31 | 48 | 9 | 49 | 16 | | | | | | | | |
| ***Ninth Ave & W. 38th St*** | Sidewalk A | 2 | 3 | 20 | 39 | 7 | 12 | 39 | 72 | 21 | 9 | 37 | 65 | | | | | | | | |
| | Sidewalk B | 37 | 67 | 0 | 23 | 27 | 40 | 18 | 20 | 38 | 61 | 35 | 46 | | | | | | | | |
| | Sidewalk C | 13 | 20 | 75 | 66 | 7 | 16 | 29 | 37 | 13 | 8 | 76 | 83 | | | | | | | | |
| | Sidewalk D | 22 | 15 | 10 | 5 | 43 | 26 | 11 | 25 | 36 | 40 | 9 | 6 | | | | | | | | |
| | Corner A & B | 2 | 7 | 1 | 8 | 7 | 8 | 5 | 10 | 5 | 4 | 9 | 9 | | | | | | | | |
| | Corner C & D | 4 | 6 | 0 | 1 | 12 | 11 | 0 | 4 | 4 | 5 | 1 | 1 | | | | | | | | |
| | Crosswalk (A-B-C) | 12 | 1 | 71 | 70 | 6 | 1 | 37 | 37 | 21 | 19 | 99 | 57 | | | | | | | | |
| | Crosswalk (C-D-A) | 4 | 9 | 39 | 23 | 3 | 6 | 37 | 50 | 17 | 16 | 43 | 23 | | | | | | | | |
| ***Ninth Ave & W. 39th St*** | Sidewalk A | 8 | 17 | 22 | 52 | 2 | 8 | 28 | 38 | 13 | 8 | 84 | 41 | | | | | | | | |
| | Sidewalk B | 39 | 133 | 10 | 14 | 62 | 60 | 10 | 30 | 170 | 73 | 20 | 19 | | | | | | | | |
| | Sidewalk C | 5 | 16 | 37 | 102 | 17 | 23 | 86 | 69 | 13 | 18 | 179 | 79 | | | | | | | | |
| | Sidewalk D | 17 | 39 | 5 | 4 | 39 | 29 | 3 | 1 | 60 | 39 | 5 | 6 | | | | | | | | |
| | Corner A & B | 2 | 10 | 8 | 6 | 0 | 4 | 5 | 7 | 6 | 4 | 6 | 4 | | | | | | | | |
| | Corner C & D | 10 | 3 | 0 | 3 | 7 | 17 | 0 | 0 | 7 | 7 | 3 | 1 | | | | | | | | |
| | Crosswalk (A-B-C) | 7 | 14 | 31 | 108 | 8 | 14 | 85 | 63 | 26 | 27 | 179 | 83 | | | | | | | | |
| | Crosswalk (C-D-A) | 2 | 10 | 17 | 47 | 17 | 8 | 25 | 27 | 12 | 14 | 79 | 30 | | | | | | | | |
| ***Ninth Ave & W. 42nd St*** | Sidewalk A | 83 | 37 | 84 | 70 | 51 | 40 | 144 | 98 | 160 | 62 | 168 | 136 | | | | | | | | |
| | Sidewalk B | 83 | 91 | 85 | 100 | 86 | 80 | 74 | 86 | 140 | 137 | 174 | 140 | | | | | | | | |
| | Sidewalk C | 135 | 123 | 127 | 119 | 121 | 170 | 107 | 78 | 151 | 151 | 163 | 137 | | | | | | | | |
| | Sidewalk D | 38 | 33 | 82 | 34 | 78 | 98 | 61 | 50 | 83 | 83 | 74 | 62 | | | | | | | | |
| | Corner A & B | 11 | 8 | 10 | 18 | 10 | 9 | 12 | 18 | 7 | 22 | 17 | 34 | | | | | | | | |
| | Corner C & D | 30 | 11 | 5 | 6 | 25 | 32 | 2 | 8 | 20 | 23 | 11 | 5 | | | | | | | | |
| | Crosswalk (A-B-C) | 100 | 62 | 92 | 133 | 76 | 91 | 105 | 112 | 191 | 140 | 143 | 210 | | | | | | | | |
| | Crosswalk (C-D-A) | 98 | 81 | 95 | 70 | 89 | 116 | 112 | 93 | 119 | 108 | 167 | 172 | | | | | | | | |
| ***Eighth Ave & W. 30th St*** | Sidewalk A | 46 | 17 | 80 | 84 | 32 | 28 | 146 | 192 | 23 | 39 | 118 | 115 | 15 | 30 | 62 | 53 | 47 | 35 | 103 | 94 |
| | Sidewalk B | 101 | 236 | 28 | 10 | 146 | 192 | 46 | 61 | 222 | 174 | 51 | 73 | 150 | 100 | 24 | 53 | 104 | 114 | 24 | 21 |
| | Sidewalk C | 40 | 21 | 48 | 109 | 37 | 35 | 95 | 55 | 17 | 20 | 172 | 94 | 10 | 24 | 74 | 29 | 5 | 3 | 64 | 61 |
| | Sidewalk D | 66 | 76 | 25 | 10 | 111 | 137 | 26 | 14 | 103 | 92 | 20 | 31 | 72 | 51 | 19 | 24 | 67 | 51 | 27 | 28 |
| | Corner A & B | 27 | 12 | 39 | 13 | 16 | 19 | 35 | 37 | 9 | 27 | 41 | 54 | 9 | 19 | 17 | 38 | 28 | 22 | 18 | 8 |
| | Corner C & D | 12 | 8 | 0 | 11 | 15 | 14 | 10 | 10 | 5 | 9 | 0 | 3 | 5 | 1 | 4 | 2 | 1 | 7 | 15 | 9 |
| | Crosswalk (A-B-C) | 14 | 47 | 52 | 121 | 22 | 22 | 98 | 98 | 23 | 30 | 176 | 116 | 9 | 14 | 61 | 31 | 18 | 15 | 65 | 63 |
| | Crosswalk (C-D-A) | 28 | 13 | 56 | 67 | 16 | 22 | 77 | 87 | 16 | 23 | 101 | 97 | 17 | 10 | 56 | 41 | 9 | 6 | 67 | 50 |
| ***Eighth Ave & W. 31st St*** | Sidewalk A | 104 | 37 | 23 | 107 | 42 | 9 | 33 | 127 | 67 | 21 | 78 | 136 | 34 | 13 | 60 | 69 | 38 | 11 | 58 | 68 |
| | Sidewalk B | 30 | 94 | 55 | 146 | 73 | 58 | 98 | 70 | 107 | 90 | 104 | 58 | 62 | 51 | 46 | 15 | 124 | 129 | 91 | 71 |
| | Sidewalk C | 13 | 17 | 48 | 74 | 30 | 31 | 133 | 53 | 15 | 25 | 121 | 26 | 0 | 19 | 136 | 65 | 17 | 11 | 97 | 85 |
| | Sidewalk D | 40 | 46 | 29 | 89 | 90 | 48 | 90 | 63 | 55 | 61 | 57 | 66 | 112 | 115 | 67 | 53 | 57 | 57 | 14 | 9 |
| | Corner A & B | 18 | 36 | 15 | 15 | 25 | 41 | 25 | 25 | 25 | 20 | 25 | 20 | 19 | 9 | 31 | 75 | 8 | 9 | 30 | 30 |
| | Corner C & D | 11 | 7 | 20 | 10 | 6 | 6 | 25 | 30 | 6 | 6 | 15 | 17 | 1 | 3 | 39 | 51 | 6 | 9 | 2 | 2 |
| | Crosswalk (A-B-C) | 60 | 75 | 73 | 197 | 85 | 68 | 87 | 135 | 103 | 56 | 119 | 123 | 27 | 54 | 114 | 71 | 18 | 25 | 119 | 64 |
| | Crosswalk (C-D-A) | 31 | 77 | 66 | 82 | 54 | 98 | 98 | 93 | 53 | 75 | 130 | 79 | 29 | 25 | 57 | 54 | 39 | 33 | 67 | 55 |
| ***Eighth Ave & W. 33rd St*** | Sidewalk A | 136 | 278 | 166 | 269 | 183 | 158 | 231 | 183 | 93 | 118 | 278 | 190 | 40 | 26 | 64 | 132 | 111 | 43 | 81 | 142 |
| | Sidewalk B | 139 | 125 | 176 | 130 | 123 | 77 | 116 | 59 | 251 | 61 | 143 | 112 | 71 | 224 | 43 | 62 | 266 | 231 | 70 | 46 |
| | Sidewalk C | 114 | 99 | 211 | 118 | 269 | 216 | 216 | 174 | 166 | 224 | 174 | 312 | 39 | 135 | 150 | 216 | 112 | 57 | 92 | 72 |
| | Sidewalk D | 44 | 74 | 121 | 68 | 115 | 137 | 249 | 215 | 17 | 50 | 238 | 81 | 41 | 70 | 84 | 28 | 34 | 53 | 63 | 35 |
| | Corner A & B | 16 | 15 | 25 | 15 | 36 | 21 | 64 | 52 | 54 | 39 | 47 | 53 | 7 | 7 | 29 | 27 | 31 | 12 | 42 | 37 |
| | Corner C & D | 29 | 21 | 20 | 28 | 65 | 76 | 63 | 70 | 37 | 77 | 53 | 61 | 22 | 25 | 39 | 25 | 117 | 60 | 14 | 19 |
| | Crosswalk (A-B-C) | 248 | 136 | 247 | 114 | 142 | 143 | 269 | 266 | 426 | 134 | 545 | 151 | 43 | 62 | 101 | 254 | 92 | 39 | 149 | 215 |
| | Crosswalk (C-D-A) | 313 | 100 | 533 | 213 | 283 | 186 | 154 | 119 | 259 | 144 | 284 | 128 | 138 | 36 | 234 | 174 | 124 | 34 | 96 | 65 |
| ***Eighth Ave & W. 34th St*** | Sidewalk A | 171 | 75 | 44 | 89 | 90 | 80 | 78 | 104 | 138 | 120 | 67 | 117 | 65 | 72 | 14 | 36 | 118 | 79 | 95 | 97 |
| | Sidewalk B | 132 | 76 | 73 | 120 | 77 | 68 | 115 | 130 | 106 | 83 | 106 | 185 | 94 | 119 | 121 | 219 | 209 | 204 | 229 | 205 |
| | Sidewalk C | 48 | 103 | 146 | 17 | 74 | 83 | 56 | 33 | 113 | 71 | 73 | 53 | 120 | 55 | 24 | 46 | 194 | 132 | 141 | 188 |
| | Sidewalk D | 118 | 84 | 78 | 55 | 89 | 64 | 86 | 33 | 87 | 135 | 121 | 41 | 120 | 55 | 24 | 46 | 129 | 79 | 189 | 181 |
| | Corner A & B | 25 | 30 | 46 | 46 | 36 | 41 | 51 | 56 | 51 | 51 | 102 | 107 | 81 | 173 | 736 | 875 | 11 | 21 | 107 | 31 |
| | Corner C & D | 15 | 15 | 20 | 15 | 25 | 25 | 18 | 25 | 30 | 30 | 41 | 41 | 115 | 231 | 138 | 52 | 21 | 22 | 41 | 18 |
| | Crosswalk (A-B-C) | 121 | 117 | 153 | 113 | 223 | 194 | 214 | 174 | 278 | 192 | 160 | 306 | 70 | 48 | 154 | 245 | 149 | 79 | 157 | 96 |
| | Crosswalk (C-D-A) | 100 | 163 | 158 | 107 | 139 | 179 | 185 | 178 | 195 | 116 | 206 | 174 | 682 | 822 | 77 | 45 | 278 | 104 | 113 | 114 |
| ***Eighth Ave & W. 37th St*** | Sidewalk A | 19 | 37 | 198 | 217 | 163 | 95 | 49 | 93 | 39 | 27 | 250 | 181 | | | | | | | | |
| | Sidewalk B | 139 | 263 | 98 | 31 | 177 | 207 | 46 | 48 | 368 | 331 | 23 | 97 | | | | | | | | |
| | Sidewalk C | 49 | 15 | 161 | 160 | 42 | 115 | 52 | 55 | 18 | 44 | 233 | 211 | | | | | | | | |
| | Sidewalk D | 159 | 214 | 35 | 22 | 159 | 66 | 127 | 43 | 325 | 221 | 60 | 18 | | | | | | | | |
| | Corner A & B | 13 | 16 | 64 | 32 | 14 | 12 | 22 | 21 | 21 | 14 | 17 | 14 | | | | | | | | |
| | Corner C & D | 18 | 17 | 20 | 16 | 18 | 12 | 20 | 20 | 21 | 16 | 22 | 24 | | | | | | | | |
| | Crosswalk (A-B-C) | 48 | 37 | 158 | 166 | 150 | 108 | 142 | 158 | 37 | 75 | 246 | 292 | | | | | | | | |
| | Crosswalk (C-D-A) | 43 | 49 | 208 | 220 | 119 | 146 | 256 | 177 | 39 | 106 | 407 | 188 | | | | | | | | |
| ***Eighth Ave & W. 38th St*** | Sidewalk A | 28 | 52 | 64 | 159 | 29 | 32 | 97 | 82 | 19 | 22 | 233 | 252 | | | | | | | | |
| | Sidewalk B | 56 | 234 | 111 | 30 | 7 | 100 | 29 | 5 | 120 | 263 | 40 | 55 | | | | | | | | |
| | Sidewalk C | 32 | 28 | 58 | 97 | 96 | 13 | 80 | 92 | 19 | 21 | 178 | 465 | | | | | | | | |
| | Sidewalk D | 74 | 188 | 19 | 22 | 107 | 124 | 42 | 37 | 142 | 271 | 0 | 0 | | | | | | | | |
| | Corner A & B | 21 | 81 | 76 | 25 | 177 | 137 | 154 | 118 | 10 | 17 | 11 | 15 | | | | | | | | |
| | Corner C & D | 26 | 31 | 9 | 11 | 144 | 105 | 105 | 78 | 15 | 15 | 11 | 15 | | | | | | | | |
| | Crosswalk (A-B-C) | 27 | 16 | 42 | 88 | 17 | 18 | 87 | 55 | 4 | 12 | 17 | 7 | | | | | | | | |
| | Crosswalk (C-D-A) | 24 | 25 | 61 | 161 | 48 | 54 | 64 | 41 | 46 | 21 | 4 | 6 | | | | | | | | |

# Appendix S.5.2

**PEDESTRIAN VOLUMES (SIDEWALKS, CORNERS, AND CROSSWALKS)**
**2003 EXISTING CONDITIONS**

| Intersection | Elements | Weekday AM Peak 15-Min. | | | | Weekday MD Peak 15-Min. | | | | Weekday PM Peak 15-Min. | | | | Special Events Evening Peak 15-Min. | | | | Special Events Sunday Peak 15-Min. | | | |
|---|---|---|---|---|---|---|---|---|---|---|---|---|---|---|---|---|---|---|---|---|---|
| ***Eighth Ave & W. 39th St*** | Sidewalk A | 37 | 63 | 45 | 516 | 85 | 46 | 199 | 317 | 94 | 18 | 618 | 196 | | | | | | | | |
| | Sidewalk B | 60 | 1220 | 209 | 47 | 203 | 393 | 112 | 151 | 840 | 292 | 13 | 110 | | | | | | | | |
| | Sidewalk C | 113 | 40 | 118 | 412 | 110 | 185 | 261 | 203 | 30 | 157 | 594 | 176 | | | | | | | | |
| | Sidewalk D | 142 | 561 | 49 | 58 | 376 | 273 | 100 | 54 | 772 | 152 | 51 | 20 | | | | | | | | |
| | Corner A & B | 11 | 22 | 52 | 21 | 15 | 29 | 31 | 35 | 18 | 24 | 9 | 84 | | | | | | | | |
| | Corner C & D | 36 | 19 | 16 | 51 | 35 | 65 | 23 | 27 | 12 | 20 | 11 | 16 | | | | | | | | |
| | Crosswalk (A-B-C) | 89 | 14 | 80 | 602 | 77 | 77 | 157 | 226 | 38 | 58 | 435 | 283 | | | | | | | | |
| | Crosswalk (C-D-A) | 42 | 68 | 117 | 450 | 54 | 631 | 305 | 259 | 42 | 121 | 1004 | 144 | | | | | | | | |
| ***Eighth Ave & W. 42nd St*** | Sidewalk A | 301 | 229 | 579 | 103 | 204 | 172 | 160 | 176 | 289 | 429 | 206 | 1328 | | | | | | | | |
| | Sidewalk B | 425 | 112 | 184 | 54 | 207 | 222 | 212 | 169 | 359 | 323 | 180 | 129 | | | | | | | | |
| | Sidewalk C | 805 | 180 | 518 | 100 | 320 | 288 | 200 | 245 | 400 | 1033 | 358 | 636 | | | | | | | | |
| | Sidewalk D | 718 | 75 | 281 | 66 | 283 | 313 | 216 | 176 | 205 | 1453 | 314 | 348 | | | | | | | | |
| | Corner A & B | 40 | 41 | 54 | 36 | 4 | 41 | 66 | 93 | 23 | 156 | 87 | 167 | | | | | | | | |
| | Corner C & D | 7 | 216 | 40 | 36 | 23 | 105 | 76 | 67 | 37 | 67 | 52 | 84 | | | | | | | | |
| | Crosswalk (A-B-C) | 130 | 318 | 400 | 90 | 112 | 122 | 255 | 212 | 367 | 181 | 497 | 579 | | | | | | | | |
| | Crosswalk (C-D-A) | 1066 | 183 | 822 | 163 | 231 | 271 | 199 | 190 | 319 | 972 | 186 | 1132 | | | | | | | | |
| ***Seventh Ave & W. 31st St*** | Sidewalk A | 67 | 52 | 76 | 465 | 54 | 86 | 229 | 273 | 189 | 144 | 393 | 300 | | | | | | | | |
| | Sidewalk B | 170 | 535 | 288 | 79 | 231 | 157 | 65 | 94 | 284 | 205 | 221 | 289 | | | | | | | | |
| | Sidewalk C | 153 | 118 | 95 | 325 | 135 | 123 | 144 | 107 | 222 | 318 | 297 | 304 | | | | | | | | |
| | Sidewalk D | 90 | 675 | 102 | 49 | 257 | 189 | 41 | 31 | 232 | 254 | 196 | 198 | | | | | | | | |
| | Corner A & B | 15 | 0 | 46 | 15 | 10 | 10 | 46 | 30 | 15 | 20 | 15 | 25 | | | | | | | | |
| | Corner C & D | 10 | 46 | 15 | 41 | 36 | 36 | 10 | 15 | 25 | 25 | 25 | 20 | | | | | | | | |
| | Crosswalk (A-B-C) | 322 | 136 | 96 | 280 | 125 | 130 | 175 | 240 | 242 | 324 | 270 | 243 | | | | | | | | |
| | Crosswalk (C-D-A) | 129 | 166 | 91 | 384 | 117 | 105 | 121 | 134 | 241 | 318 | 320 | 258 | | | | | | | | |
| ***Seventh Ave & W. 33rd St*** | Sidewalk A | 146 | 141 | 180 | 373 | 175 | 114 | 278 | 237 | 162 | 268 | 256 | 317 | | | | | | | | |
| | Sidewalk B | 221 | 249 | 194 | 100 | 226 | 234 | 116 | 131 | 229 | 232 | 157 | 291 | | | | | | | | |
| | Sidewalk C | 343 | 148 | 259 | 220 | 212 | 233 | 239 | 231 | 240 | 294 | 188 | 226 | | | | | | | | |
| | Sidewalk D | 519 | 200 | 120 | 144 | 262 | 234 | 195 | 139 | 269 | 401 | 127 | 269 | | | | | | | | |
| | Corner A & B | 41 | 25 | 15 | 15 | 15 | 30 | 51 | 46 | 25 | 15 | 25 | 15 | | | | | | | | |
| | Corner C & D | 25 | 61 | 61 | 36 | 46 | 61 | 41 | 41 | 51 | 25 | 30 | 51 | | | | | | | | |
| | Crosswalk (A-B-C) | 293 | 184 | 278 | 210 | 210 | 183 | 219 | 226 | 295 | 344 | 216 | 292 | | | | | | | | |
| | Crosswalk (C-D-A) | 396 | 271 | 246 | 286 | 269 | 249 | 264 | 265 | 234 | 346 | 248 | 357 | | | | | | | | |
| ***Seventh Ave & W. 34th St*** | Sidewalk A | 146 | 44 | 428 | 92 | 130 | 107 | 204 | 175 | 655 | 283 | 405 | 554 | | | | | | | | |
| | Sidewalk B | 547 | 48 | 142 | 149 | 136 | 112 | 217 | 135 | 241 | 717 | 787 | 90 | | | | | | | | |
| | Sidewalk C | 411 | 299 | 117 | 147 | 151 | 137 | 93 | 122 | 247 | 446 | 152 | 550 | | | | | | | | |
| | Sidewalk D | 172 | 175 | 923 | 87 | 91 | 118 | 92 | 122 | 376 | 343 | 283 | 491 | | | | | | | | |
| | Corner A & B | 203 | 30 | 32 | 100 | 320 | 359 | 277 | 307 | 520 | 477 | 483 | 422 | | | | | | | | |
| | Corner C & D | 44 | 38 | 42 | 30 | 232 | 252 | 188 | 209 | 426 | 361 | 358 | 300 | | | | | | | | |
| | Crosswalk (A-B-C) | 465 | 88 | 249 | 121 | 272 | 258 | 164 | 191 | 59 | 68 | 63 | 77 | | | | | | | | |
| | Crosswalk (C-D-A) | 478 | 143 | 875 | 189 | 161 | 143 | 214 | 219 | 114 | 50 | 67 | 121 | | | | | | | | |
| ***Sixth Ave & W. 33rd St*** | Sidewalk A | 165 | 54 | 197 | 145 | 112 | 71 | 320 | 273 | 141 | 270 | 596 | 471 | | | | | | | | |
| | Sidewalk B | 212 | 172 | 216 | 40 | 220 | 164 | 99 | 156 | 315 | 257 | 107 | 459 | | | | | | | | |
| | Sidewalk C | 290 | 80 | 139 | 121 | 194 | 226 | 224 | 191 | 229 | 451 | 223 | 234 | | | | | | | | |
| | Sidewalk D | 345 | 183 | 199 | 222 | 264 | 249 | 169 | 142 | 552 | 590 | 282 | 493 | | | | | | | | |
| | Corner A & B | 15 | 0 | 15 | 15 | 30 | 30 | 30 | 30 | 30 | 30 | 30 | 71 | | | | | | | | |
| | Corner C & D | 0 | 56 | 15 | 36 | 30 | 30 | 61 | 61 | 61 | 61 | 61 | 91 | | | | | | | | |
| | Crosswalk (A-B-C) | 305 | 121 | 155 | 191 | 258 | 269 | 277 | 219 | 259 | 494 | 387 | 337 | | | | | | | | |
| | Crosswalk (C-D-A) | 319 | 131 | 318 | 127 | 225 | 231 | 318 | 276 | 407 | 588 | 343 | 343 | | | | | | | | |
| ***Sixth Ave & W. 34th St*** | Sidewalk A | 0 | 0 | 0 | 0 | 0 | 0 | 0 | 0 | 0 | 0 | 0 | 0 | 0 | 0 | 0 | 0 | 0 | 0 | 0 | 0 |
| | Sidewalk B | 457 | 351 | 332 | 122 | 763 | 858 | 323 | 492 | 690 | 756 | 559 | 798 | 137 | 149 | 186 | 418 | 421 | 306 | 261 | 198 |
| | Sidewalk C | 383 | 80 | 369 | 336 | 242 | 256 | 761 | 816 | 525 | 450 | 408 | 517 | 210 | 257 | 222 | 168 | 347 | 300 | 203 | 174 |
| | Sidewalk D | 0 | 0 | 0 | 0 | 0 | 0 | 0 | 0 | 0 | 0 | 0 | 0 | 0 | 0 | 0 | 0 | 0 | 0 | 0 | 0 |
| | Corner A & B | 0 | 0 | 81 | 45 | 0 | 0 | 178 | 225 | 0 | 0 | 65 | 397 | 0 | 0 | 49 | 136 | 0 | 0 | 81 | 191 |
| | Corner C & D | 39 | 22 | 0 | 0 | 82 | 48 | 0 | 0 | 28 | 17 | 0 | 0 | 15 | 53 | 0 | 0 | 38 | 20 | 0 | 0 |
| | Crosswalk (A-B-C) | 141 | 392 | 412 | 270 | 738 | 575 | 538 | 680 | 817 | 468 | 293 | 691 | 222 | 124 | 165 | 189 | 248 | 381 | 363 | 311 |
| | Crosswalk (C-D-A) | 571 | 69 | 0 | 0 | 741 | 587 | 0 | 0 | 604 | 671 | 0 | 0 | 189 | 286 | 0 | 0 | 432 | 353 | 0 | 0 |
| ***Broadway & W. 34th St*** | Sidewalk A | 355 | 130 | 696 | 156 | 258 | 405 | 661 | 736 | 655 | 1147 | 714 | 1013 | 372 | 261 | 183 | 271 | 367 | 509 | 412 | 367 |
| | Sidewalk B | 0 | 0 | 0 | 0 | 0 | 0 | 0 | 0 | 0 | 0 | 0 | 0 | 0 | 0 | 0 | 0 | 0 | 0 | 0 | 0 |
| | Sidewalk C | 0 | 0 | 0 | 0 | 0 | 0 | 0 | 0 | 0 | 0 | 0 | 0 | 0 | 0 | 0 | 0 | 0 | 0 | 0 | 0 |
| | Sidewalk D | 533 | 319 | 464 | 144 | 817 | 761 | 587 | 343 | 861 | 829 | 761 | 880 | 299 | 265 | 359 | 434 | 534 | 484 | 489 | 471 |
| | Corner A & B | 220 | 43 | 0 | 0 | 109 | 155 | 0 | 0 | 95 | 423 | 0 | 0 | 31 | 62 | 0 | 0 | 85 | 152 | 0 | 0 |
| | Corner C & D | 0 | 0 | 40 | 215 | 0 | 0 | 252 | 343 | 0 | 0 | 498 | 462 | 0 | 0 | 119 | 95 | 0 | 0 | 174 | 41 |
| | Crosswalk (A-B-C) | 1015 | 165 | 0 | 0 | 876 | 575 | 0 | 0 | 433 | 1015 | 0 | 0 | 329 | 161 | 0 | 0 | 264 | 357 | 0 | 0 |
| | Crosswalk (C-D-A) | 571 | 69 | 504 | 90 | 587 | 741 | 828 | 936 | 604 | 671 | 693 | 1001 | 189 | 286 | 246 | 143 | 238 | 255 | 249 | 245 |

# Appendix S.5.2

**PEDESTRIAN VOLUMES (SIDEWALKS, CORNERS, AND CROSSWALKS)**
**2010 FUTURE WITHOUT THE PROPOSED ACTION**

| Intersection | Elements | Weekday AM Peak 15-Min. | | | | Weekday MD Peak 15-Min. | | | | Weekday PM Peak 15-Min. | | | | Special Events Evening Peak 15-Min. | | | | Special Events Sunday Peak 15-Min. | | | |
|---|---|---|---|---|---|---|---|---|---|---|---|---|---|---|---|---|---|---|---|---|---|
| ***Rt 9A & West 30th St*** | Sidewalk A | 0 | 0 | 22 | 39 | 0 | 0 | 12 | 20 | 0 | 0 | 33 | 18 | 0 | 0 | 17 | 13 | 0 | 0 | 20 | 26 |
| | Sidewalk B | 0 | 0 | 0 | 0 | 2 | 0 | 0 | 0 | 0 | 6 | 1 | 1 | 4 | 5 | 4 | 3 | 0 | 7 | 2 | 1 |
| | Sidewalk C | 2 | 0 | 2 | 2 | 1 | 0 | 1 | 1 | 1 | 2 | 1 | 1 | 0 | 0 | 1 | 2 | 1 | 1 | 0 | 0 |
| | Sidewalk D | 20 | 26 | 0 | 0 | 13 | 20 | 0 | 0 | 31 | 18 | 0 | 0 | 17 | 14 | 0 | 0 | 20 | 26 | 0 | 0 |
| | Corner A & B | 0 | 0 | 0 | 0 | 0 | 0 | 0 | 0 | 0 | 0 | 4 | 0 | 0 | 0 | 4 | 2 | 0 | 0 | 1 | 0 |
| | Corner C & D | 0 | 0 | 0 | 0 | 0 | 0 | 0 | 0 | 0 | 0 | 0 | 0 | 0 | 0 | 0 | 0 | 0 | 0 | 0 | 0 |
| | Crosswalk (A-B-C) | 0 | 0 | 0 | 0 | 0 | 0 | 1 | 2 | 0 | 0 | 0 | 4 | 0 | 0 | 2 | 1 | 0 | 1 | 0 | 6 |
| | Crosswalk (C-D-A) | 5 | 2 | 24 | 36 | 1 | 1 | 14 | 31 | 2 | 1 | 28 | 31 | 0 | 0 | 24 | 14 | 0 | 2 | 20 | 24 |
| ***Rt 9A & West 34th St*** | Sidewalk A | 1 | 1 | 0 | 4 | 0 | 0 | 3 | 4 | 0 | 0 | 0 | 3 | 0 | 0 | 0 | 0 | 0 | 0 | 14 | 19 |
| | Sidewalk B | 0 | 0 | 3 | 10 | 0 | 3 | 10 | 16 | 0 | 1 | 8 | 11 | 1 | 0 | 0 | 2 | 6 | 3 | 3 | 0 |
| | Sidewalk C | 26 | 21 | 0 | 0 | 57 | 47 | 2 | 0 | 45 | 49 | 0 | 0 | 1 | 2 | 1 | 0 | 66 | 55 | 5 | 0 |
| | Sidewalk D | 9 | 1 | 0 | 0 | 2 | 3 | 2 | 0 | 2 | 0 | 0 | 0 | 0 | 0 | 0 | 0 | 16 | 19 | 0 | 0 |
| | Corner A & B | 3 | 0 | 3 | 0 | 7 | 7 | 7 | 7 | 3 | 13 | 3 | 13 | 0 | 0 | 0 | 4 | 0 | 0 | 3 | 0 |
| | Corner C & D | 3 | 0 | 3 | 0 | 4 | 3 | 4 | 3 | 2 | 9 | 2 | 8 | 0 | 0 | 0 | 0 | 0 | 0 | 0 | 0 |
| | Crosswalk (A-B-C) | 3 | 8 | 0 | 0 | 9 | 10 | 2 | 0 | 8 | 7 | 6 | 0 | 0 | 0 | 1 | 0 | 0 | 0 | 5 | 0 |
| | Crosswalk (C-D-A) | 30 | 19 | 0 | 4 | 59 | 47 | 3 | 4 | 46 | 43 | 0 | 3 | 0 | 0 | 9 | 14 | 67 | 55 | 13 | 13 |
| ***Rt 9A & West 39th St*** | Sidewalk A | 0 | 0 | 0 | 0 | 0 | 0 | 0 | 0 | 0 | 0 | 0 | 0 | | | | | | | | |
| | Sidewalk B | 0 | 0 | 0 | 0 | 7 | 4 | 0 | 0 | 3 | 0 | 0 | 0 | | | | | | | | |
| | Sidewalk C | 14 | 13 | 1 | 2 | 40 | 43 | 9 | 4 | 25 | 34 | 4 | 0 | | | | | | | | |
| | Sidewalk D | 0 | 0 | 0 | 0 | 0 | 11 | 0 | 0 | 0 | 2 | 0 | 0 | | | | | | | | |
| | Corner A & B | 1 | 2 | 0 | 0 | 0 | 0 | 0 | 0 | 0 | 0 | 0 | 0 | | | | | | | | |
| | Corner C & D | 0 | 0 | 0 | 0 | 0 | 0 | 0 | 0 | 0 | 2 | 0 | 0 | | | | | | | | |
| | Crosswalk (A-B-C) | 2 | 0 | 0 | 0 | 0 | 0 | 6 | 3 | 0 | 0 | 3 | 0 | | | | | | | | |
| | Crosswalk (C-D-A) | 22 | 19 | 33 | 43 | 32 | 32 | 30 | 16 | 25 | 34 | 40 | 29 | | | | | | | | |
| ***Rt 9A & West 40th St*** | Sidewalk A | 0 | 0 | 0 | 0 | 0 | 1 | 1 | 0 | 1 | 3 | 0 | 0 | | | | | | | | |
| | Sidewalk B | 0 | 0 | 0 | 0 | 3 | 0 | 0 | 2 | 2 | 3 | 1 | 2 | | | | | | | | |
| | Sidewalk C | 0 | 0 | 0 | 0 | 0 | 1 | 2 | 0 | 0 | 0 | 1 | 0 | | | | | | | | |
| | Sidewalk D | 0 | 0 | 0 | 0 | 0 | 0 | 0 | 0 | 0 | 0 | 0 | 0 | | | | | | | | |
| | Corner A & B | 0 | 0 | 0 | 0 | 0 | 0 | 0 | 1 | 0 | 0 | 0 | 1 | | | | | | | | |
| | Corner C & D | 0 | 0 | 0 | 0 | 1 | 0 | 0 | 0 | 0 | 0 | 0 | 0 | | | | | | | | |
| | Crosswalk (A-B-C) | 0 | 0 | 2 | 0 | 0 | 0 | 1 | 4 | 0 | 0 | 1 | 0 | | | | | | | | |
| | Crosswalk (C-D-A) | 0 | 2 | 26 | 47 | 0 | 1 | 20 | 18 | 1 | 2 | 43 | 36 | | | | | | | | |
| ***Rt 9A & West 42nd St*** | Sidewalk A | 2 | 0 | 3 | 0 | 2 | 6 | 0 | 0 | 28 | 0 | 0 | 0 | | | | | | | | |
| | Sidewalk B | 4 | 10 | 26 | 33 | 8 | 16 | 56 | 67 | 3 | 24 | 58 | 53 | | | | | | | | |
| | Sidewalk C | 32 | 38 | 1 | 4 | 53 | 54 | 6 | 2 | 62 | 49 | 9 | 7 | | | | | | | | |
| | Sidewalk D | 2 | 3 | 0 | 3 | 0 | 0 | 2 | 2 | 0 | 7 | 1 | 0 | | | | | | | | |
| | Corner A & B | 0 | 0 | 4 | 5 | 3 | 0 | 12 | 4 | 23 | 0 | 5 | 0 | | | | | | | | |
| | Corner C & D | 4 | 0 | 0 | 0 | 0 | 1 | 0 | 0 | 2 | 4 | 0 | 0 | | | | | | | | |
| | Crosswalk (A-B-C) | 24 | 29 | 2 | 7 | 50 | 62 | 8 | 4 | 56 | 53 | 1 | 23 | | | | | | | | |
| | Crosswalk (C-D-A) | 27 | 31 | 32 | 46 | 49 | 51 | 35 | 35 | 38 | 48 | 14 | 16 | | | | | | | | |
| ***Eleventh Ave & West 29th*** | Sidewalk A | 0 | 0 | 3 | 2 | 2 | 1 | 13 | 19 | 0 | 4 | 8 | 12 | | | | | | | | |
| | Sidewalk B | 11 | 5 | 2 | 4 | 22 | 64 | 9 | 5 | 6 | 31 | 4 | 1 | | | | | | | | |
| | Sidewalk C | 4 | 6 | 15 | 9 | 10 | 3 | 31 | 56 | 7 | 2 | 9 | 28 | | | | | | | | |
| | Sidewalk D | 2 | 1 | 0 | 0 | 17 | 17 | 0 | 0 | 6 | 11 | 5 | 2 | | | | | | | | |
| | Corner A & B | 0 | 0 | 0 | 0 | 0 | 0 | 2 | 1 | 0 | 1 | 0 | 0 | | | | | | | | |
| | Corner C & D | 0 | 4 | 0 | 0 | 3 | 4 | 0 | 0 | 2 | 3 | 1 | 0 | | | | | | | | |
| | Crosswalk (A-B-C) | 1 | 2 | 9 | 4 | 0 | 1 | 23 | 58 | 0 | 0 | 6 | 28 | | | | | | | | |
| | Crosswalk (C-D-A) | 0 | 0 | 3 | 3 | 2 | 1 | 15 | 20 | 2 | 0 | 8 | 10 | | | | | | | | |
| ***Eleventh Ave & West 30th*** | Sidewalk A | 2 | 0 | 2 | 2 | 10 | 5 | 9 | 16 | 2 | 6 | 7 | 7 | 0 | 0 | 0 | 1 | 0 | 0 | 4 | 4 |
| | Sidewalk B | 12 | 5 | 8 | 4 | 13 | 59 | 58 | 75 | 7 | 35 | 13 | 15 | 6 | 7 | 6 | 2 | 24 | 26 | 23 | 23 |
| | Sidewalk C | 4 | 1 | 14 | 6 | 7 | 1 | 33 | 78 | 5 | 0 | 22 | 35 | 3 | 0 | 3 | 4 | 3 | 5 | 29 | 33 |
| | Sidewalk D | 2 | 5 | 1 | 0 | 22 | 26 | 3 | 2 | 9 | 12 | 5 | 0 | 1 | 1 | 0 | 1 | 8 | 10 | 2 | 0 |
| | Corner A & B | 0 | 5 | 1 | 4 | 18 | 14 | 22 | 17 | 4 | 13 | 4 | 10 | 0 | 0 | 3 | 0 | 0 | 0 | 3 | 3 |
| | Corner C & D | 0 | 3 | 0 | 4 | 14 | 9 | 14 | 9 | 2 | 8 | 2 | 8 | 0 | 0 | 0 | 0 | 2 | 0 | 0 | 0 |
| | Crosswalk (A-B-C) | 4 | 2 | 4 | 2 | 29 | 38 | 31 | 36 | 6 | 7 | 14 | 10 | 1 | 1 | 2 | 2 | 11 | 10 | 10 | 11 |
| | Crosswalk (C-D-A) | 0 | 0 | 4 | 2 | 2 | 1 | 19 | 34 | 0 | 0 | 9 | 6 | 2 | 1 | 1 | 2 | 2 | 1 | 8 | 9 |
| ***Eleventh Ave & West 33rd*** | Sidewalk A | 0 | 1 | 1 | 8 | 2 | 0 | 3 | 2 | 0 | 0 | 1 | 3 | 0 | 0 | 1 | 2 | 0 | 1 | 0 | 2 |
| | Sidewalk B | 12 | 12 | 9 | 5 | 89 | 92 | 65 | 88 | 24 | 36 | 18 | 25 | 16 | 5 | 4 | 13 | 36 | 38 | 26 | 27 |
| | Sidewalk C | 2 | 0 | 7 | 5 | 0 | 2 | 3 | 30 | 2 | 1 | 7 | 18 | 2 | 0 | 2 | 5 | 2 | 0 | 14 | 13 |
| | Sidewalk D | 2 | 4 | 1 | 4 | 1 | 2 | 0 | 0 | 0 | 3 | 1 | 0 | 3 | 3 | 0 | 1 | 0 | 1 | 0 | 2 |
| | Corner A & B | 0 | 0 | 5 | 10 | 1 | 0 | 79 | 66 | 0 | 0 | 20 | 19 | 0 | 0 | 4 | 9 | 0 | 0 | 26 | 25 |
| | Corner C & D | 0 | 0 | 0 | 0 | 1 | 0 | 0 | 0 | 0 | 1 | 0 | 0 | 0 | 0 | 1 | 0 | 0 | 2 | 0 | 0 |
| | Crosswalk (A-B-C) | 0 | 0 | 7 | 5 | 1 | 2 | 2 | 29 | 0 | 0 | 5 | 18 | 0 | 0 | 2 | 4 | 0 | 1 | 13 | 13 |
| | Crosswalk (C-D-A) | 2 | 0 | 2 | 8 | 0 | 2 | 0 | 2 | 1 | 1 | 1 | 3 | 0 | 0 | 1 | 1 | 1 | 1 | 1 | 2 |
| ***Eleventh Ave & West 34th*** | Sidewalk A | 7 | 18 | 2 | 3 | 14 | 30 | 1 | 5 | 12 | 13 | 2 | 3 | 11 | 5 | 2 | 1 | 9 | 5 | 8 | 16 |
| | Sidewalk B | 8 | 8 | 22 | 12 | 74 | 67 | 52 | 37 | 19 | 23 | 37 | 31 | 5 | 8 | 1 | 5 | 28 | 30 | 47 | 59 |
| | Sidewalk C | 11 | 11 | 21 | 14 | 34 | 38 | 72 | 80 | 29 | 31 | 20 | 30 | 39 | 1 | 26 | 3 | 40 | 36 | 32 | 36 |
| | Sidewalk D | 0 | 0 | 31 | 21 | 3 | 4 | 70 | 50 | 5 | 1 | 50 | 48 | 2 | 1 | 2 | 3 | 1 | 1 | 67 | 55 |
| | Corner A & B | 1 | 2 | 0 | 0 | 0 | 2 | 1 | 2 | 0 | 0 | 2 | 2 | 2 | 0 | 1 | 0 | 1 | 0 | 2 | 3 |
| | Corner C & D | 1 | 1 | 0 | 0 | 1 | 7 | 1 | 1 | 0 | 6 | 1 | 0 | 0 | 25 | 3 | 2 | 4 | 3 | 0 | 0 |
| | Crosswalk (A-B-C) | 16 | 10 | 19 | 17 | 36 | 35 | 74 | 76 | 30 | 28 | 17 | 26 | 3 | 5 | 4 | 9 | 57 | 36 | 35 | 31 |
| | Crosswalk (C-D-A) | 14 | 15 | 11 | 10 | 36 | 29 | 24 | 26 | 26 | 26 | 20 | 22 | 8 | 1 | 0 | 6 | 41 | 32 | 35 | 30 |
| ***Eleventh Ave & West 35th*** | Sidewalk A | 0 | 0 | 4 | 3 | 0 | 0 | 4 | 6 | 0 | 0 | 5 | 6 | | | | | | | | |
| | Sidewalk B | 8 | 7 | 0 | 0 | 64 | 53 | 1 | 0 | 13 | 15 | 2 | 0 | | | | | | | | |
| | Sidewalk C | 2 | 0 | 4 | 6 | 1 | 8 | 64 | 53 | 0 | 0 | 14 | 12 | | | | | | | | |
| | Sidewalk D | 4 | 3 | 0 | 0 | 4 | 4 | 0 | 0 | 4 | 4 | 0 | 0 | | | | | | | | |
| | Corner A & B | 0 | 0 | 0 | 1 | 0 | 0 | 0 | 1 | 0 | 0 | 2 | 0 | | | | | | | | |
| | Corner C & D | 0 | 1 | 0 | 0 | 0 | 0 | 0 | 0 | 0 | 0 | 0 | 0 | | | | | | | | |
| | Crosswalk (A-B-C) | 0 | 1 | 6 | 7 | 1 | 5 | 64 | 53 | 1 | 2 | 14 | 14 | | | | | | | | |
| | Crosswalk (C-D-A) | 0 | 0 | 4 | 3 | 2 | 2 | 4 | 5 | 0 | 1 | 4 | 6 | | | | | | | | |
| ***Eleventh Ave & West 36th*** | Sidewalk A | 0 | 0 | 4 | 2 | 0 | 0 | 1 | 10 | 0 | 0 | 4 | 5 | | | | | | | | |
| | Sidewalk B | 3 | 7 | 0 | 0 | 58 | 49 | 1 | 1 | 13 | 15 | 1 | 0 | | | | | | | | |
| | Sidewalk C | 4 | 1 | 3 | 6 | 2 | 2 | 56 | 48 | 3 | 1 | 13 | 14 | | | | | | | | |
| | Sidewalk D | 5 | 4 | 0 | 0 | 1 | 5 | 0 | 0 | 6 | 5 | 0 | 0 | | | | | | | | |
| | Corner A & B | 0 | 0 | 1 | 0 | 0 | 0 | 1 | 0 | 0 | 0 | 1 | 0 | | | | | | | | |
| | Corner C & D | 0 | 0 | 0 | 0 | 0 | 0 | 0 | 0 | 1 | 0 | 0 | 0 | | | | | | | | |
| | Crosswalk (A-B-C) | 0 | 1 | 3 | 6 | 0 | 1 | 56 | 46 | 0 | 0 | 14 | 13 | | | | | | | | |
| | Crosswalk (C-D-A) | 3 | 2 | 0 | 0 | 3 | 2 | 0 | 9 | 3 | 0 | 4 | 5 | | | | | | | | |

# Appendix S.5.2

**PEDESTRIAN VOLUMES (SIDEWALKS, CORNERS, AND CROSSWALKS)**
**2010 FUTURE WITHOUT THE PROPOSED ACTION**

| Intersection | Elements | Weekday AM Peak 15-Min. | | | | Weekday MD Peak 15-Min. | | | | Weekday PM Peak 15-Min. | | | | Special Events Evening Peak 15-Min. | | | | Special Events Sunday Peak 15-Min. | | | |
|---|---|---|---|---|---|---|---|---|---|---|---|---|---|---|---|---|---|---|---|---|---|
| *Eleventh Ave & West 37th* | Sidewalk A | 2 | 2 | 0 | 1 | 1 | 1 | 0 | 0 | 0 | 0 | 0 | 3 | | | | | | | | |
| | Sidewalk B | 3 | 5 | 0 | 0 | 50 | 54 | 3 | 5 | 16 | 17 | 0 | 0 | | | | | | | | |
| | Sidewalk C | 1 | 0 | 3 | 5 | 2 | 4 | 48 | 38 | 0 | 1 | 10 | 9 | | | | | | | | |
| | Sidewalk D | 0 | 0 | 0 | 0 | 4 | 3 | 0 | 3 | 0 | 7 | 1 | 3 | | | | | | | | |
| | Corner A & B | 0 | 1 | 0 | 0 | 0 | 0 | 0 | 1 | 0 | 0 | 4 | 2 | | | | | | | | |
| | Corner C & D | 0 | 1 | 0 | 0 | 1 | 0 | 0 | 0 | 1 | 0 | 0 | 0 | | | | | | | | |
| | Crosswalk (A-B-C) | 0 | 2 | 4 | 5 | 2 | 0 | 48 | 45 | 2 | 1 | 11 | 10 | | | | | | | | |
| | Crosswalk (C-D-A) | 0 | 0 | 1 | 3 | 6 | 9 | 0 | 0 | 0 | 0 | 0 | 0 | | | | | | | | |
| *Eleventh Ave & West 38th* | Sidewalk A | 0 | 0 | 1 | 2 | 1 | 2 | 1 | 0 | 0 | 0 | 1 | 0 | | | | | | | | |
| | Sidewalk B | 0 | 0 | 2 | 2 | 0 | 0 | 0 | 1 | 0 | 0 | 0 | 0 | | | | | | | | |
| | Sidewalk C | 0 | 1 | 3 | 4 | 0 | 5 | 40 | 32 | 0 | 2 | 9 | 7 | | | | | | | | |
| | Sidewalk D | 0 | 0 | 4 | 0 | 0 | 0 | 3 | 2 | 0 | 0 | 11 | 1 | | | | | | | | |
| | Corner A & B | 0 | 0 | 0 | 0 | 0 | 0 | 0 | 0 | 0 | 0 | 0 | 0 | | | | | | | | |
| | Corner C & D | 0 | 0 | 0 | 0 | 0 | 0 | 0 | 0 | 0 | 0 | 0 | 0 | | | | | | | | |
| | Crosswalk (A-B-C) | 0 | 0 | 0 | 0 | 13 | 2 | 6 | 3 | 0 | 0 | 0 | 0 | | | | | | | | |
| | Crosswalk (C-D-A) | 0 | 0 | 0 | 2 | 1 | 0 | 4 | 2 | 0 | 8 | 0 | 0 | | | | | | | | |
| *Eleventh Ave & West 39th* | Sidewalk A | 0 | 1 | 2 | 78 | 5 | 7 | 6 | 2 | 2 | 2 | 2 | 2 | 1 | 0 | 0 | 0 | 0 | 0 | 1 | 6 |
| | Sidewalk B | 1 | 2 | 0 | 0 | 0 | 0 | 1 | 20 | 3 | 1 | 0 | 1 | 0 | 0 | 5 | 0 | 0 | 1 | 4 | 0 |
| | Sidewalk C | 14 | 17 | 5 | 3 | 30 | 31 | 0 | 0 | 23 | 29 | 0 | 0 | 3 | 4 | 1 | 0 | 56 | 41 | 0 | 1 |
| | Sidewalk D | 1 | 40 | 15 | 12 | 7 | 0 | 30 | 30 | 1 | 1 | 24 | 29 | 0 | 0 | 1 | 0 | 13 | 6 | 48 | 37 |
| | Corner A & B | 0 | 1 | 0 | 1 | 0 | 0 | 0 | 0 | 5 | 0 | 5 | 0 | 8 | 4 | 0 | 3 | 0 | 0 | 0 | 0 |
| | Corner C & D | 0 | 1 | 0 | 1 | 0 | 0 | 0 | 0 | 4 | 0 | 2 | 0 | 0 | 4 | 0 | 0 | 2 | 0 | 0 | 0 |
| | Crosswalk (A-B-C) | 0 | 1 | 4 | 0 | 14 | 5 | 3 | 0 | 0 | 0 | 2 | 1 | 0 | 0 | 0 | 0 | 10 | 0 | 2 | 1 |
| | Crosswalk (C-D-A) | 14 | 12 | 3 | 76 | 30 | 32 | 6 | 3 | 23 | 28 | 4 | 0 | 0 | 8 | 8 | 4 | 62 | 38 | 12 | 7 |
| *Eleventh Ave & West 40th* | Sidewalk A | 4 | 7 | 12 | 16 | 3 | 0 | 2 | 1 | 5 | 0 | 66 | 10 | | | | | | | | |
| | Sidewalk B | 4 | 1 | 1 | 2 | 1 | 2 | 3 | 2 | 22 | 0 | 0 | 0 | | | | | | | | |
| | Sidewalk C | 0 | 1 | 0 | 0 | 0 | 1 | 2 | 3 | 1 | 6 | 10 | 6 | | | | | | | | |
| | Sidewalk D | 7 | 8 | 0 | 1 | 12 | 17 | 4 | 4 | 101 | 2 | 1 | 0 | | | | | | | | |
| | Corner A & B | 8 | 11 | 7 | 6 | 0 | 6 | 0 | 3 | 0 | 0 | 0 | 0 | | | | | | | | |
| | Corner C & D | 6 | 6 | 6 | 6 | 0 | 3 | 0 | 3 | 0 | 0 | 0 | 0 | | | | | | | | |
| | Crosswalk (A-B-C) | 0 | 1 | 1 | 0 | 3 | 0 | 0 | 5 | 0 | 0 | 0 | 0 | | | | | | | | |
| | Crosswalk (C-D-A) | 0 | 0 | 10 | 6 | 0 | 5 | 8 | 3 | 8 | 10 | 18 | 0 | | | | | | | | |
| *Eleventh Ave & West 42nd* | Sidewalk A | 43 | 24 | 2 | 42 | 70 | 65 | 3 | 21 | 77 | 53 | 4 | 58 | 36 | 2 | 1 | 24 | 95 | 63 | 16 | 23 |
| | Sidewalk B | 11 | 16 | 86 | 25 | 4 | 3 | 101 | 79 | 0 | 13 | 137 | 67 | 0 | 18 | 73 | 5 | 22 | 9 | 129 | 94 |
| | Sidewalk C | 69 | 27 | 1 | 8 | 73 | 61 | 13 | 4 | 70 | 71 | 1 | 0 | 20 | 15 | 4 | 4 | 98 | 85 | 7 | 1 |
| | Sidewalk D | 57 | 14 | 46 | 22 | 39 | 16 | 67 | 59 | 42 | 27 | 56 | 58 | 32 | 16 | 13 | 5 | 47 | 20 | 97 | 84 |
| | Corner A & B | 0 | 0 | 0 | 0 | 0 | 0 | 0 | 0 | 0 | 0 | 0 | 0 | 0 | 5 | 9 | 0 | 2 | 0 | 5 | 10 |
| | Corner C & D | 3 | 0 | 0 | 0 | 2 | 5 | 4 | 1 | 1 | 1 | 6 | 0 | 2 | 2 | 0 | 0 | 2 | 3 | 0 | 1 |
| | Crosswalk (A-B-C) | 71 | 27 | 25 | 29 | 95 | 76 | 32 | 10 | 114 | 63 | 18 | 20 | 57 | 6 | 17 | 24 | 119 | 76 | 22 | 15 |
| | Crosswalk (C-D-A) | 80 | 22 | 54 | 22 | 84 | 59 | 18 | 17 | 84 | 70 | 23 | 32 | 38 | 17 | 14 | 15 | 115 | 86 | 29 | 16 |
| *Tenth Ave & W. 29th St* | Sidewalk A | 9 | 8 | 28 | 16 | 18 | 29 | 23 | 78 | 6 | 18 | 9 | 57 | | | | | | | | |
| | Sidewalk B | 13 | 10 | 15 | 10 | 14 | 52 | 9 | 49 | 11 | 35 | 6 | 41 | | | | | | | | |
| | Sidewalk C | 14 | 11 | 13 | 7 | 31 | 42 | 23 | 54 | 9 | 27 | 6 | 37 | | | | | | | | |
| | Sidewalk D | 49 | 19 | 15 | 13 | 25 | 123 | 9 | 36 | 10 | 98 | 10 | 33 | | | | | | | | |
| | Corner A & B | 3 | 4 | 1 | 2 | 2 | 5 | 1 | 2 | 6 | 7 | 3 | 2 | | | | | | | | |
| | Corner C & D | 1 | 2 | 5 | 6 | 3 | 1 | 2 | 5 | 5 | 1 | 7 | 4 | | | | | | | | |
| | Crosswalk (A-B-C) | 16 | 11 | 16 | 13 | 10 | 48 | 20 | 75 | 3 | 40 | 9 | 34 | | | | | | | | |
| | Crosswalk (C-D-A) | 28 | 12 | 37 | 13 | 8 | 76 | 20 | 99 | 6 | 56 | 14 | 73 | | | | | | | | |
| *Tenth Ave & W. 30th St* | Sidewalk A | 10 | 5 | 23 | 13 | 65 | 84 | 24 | 70 | 17 | 23 | 12 | 50 | 2 | 3 | 9 | 11 | 27 | 26 | 32 | 34 |
| | Sidewalk B | 17 | 8 | 11 | 7 | 33 | 83 | 65 | 97 | 8 | 46 | 15 | 32 | 7 | 10 | 3 | 3 | 31 | 33 | 35 | 33 |
| | Sidewalk C | 9 | 11 | 19 | 14 | 12 | 34 | 26 | 59 | 10 | 20 | 7 | 35 | 7 | 5 | 5 | 11 | 14 | 18 | 25 | 25 |
| | Sidewalk D | 32 | 15 | 11 | 5 | 25 | 100 | 13 | 31 | 10 | 69 | 9 | 24 | 11 | 17 | 7 | 6 | 45 | 47 | 14 | 20 |
| | Corner A & B | 1 | 1 | 0 | 0 | 2 | 2 | 1 | 0 | 2 | 2 | 1 | 0 | 0 | 0 | 0 | 0 | 1 | 1 | 0 | 0 |
| | Corner C & D | 0 | 0 | 1 | 0 | 0 | 0 | 0 | 3 | 0 | 0 | 1 | 0 | 2 | 0 | 1 | 1 | 0 | 1 | 0 | 0 |
| | Crosswalk (A-B-C) | 15 | 10 | 19 | 14 | 64 | 110 | 25 | 62 | 15 | 42 | 4 | 35 | 4 | 5 | 6 | 9 | 41 | 40 | 25 | 26 |
| | Crosswalk (C-D-A) | 11 | 10 | 29 | 14 | 8 | 37 | 23 | 94 | 10 | 24 | 13 | 66 | 5 | 5 | 11 | 14 | 15 | 18 | 45 | 48 |
| *Tenth Ave & W. 31st St* | Sidewalk A | 0 | 0 | 25 | 6 | 0 | 0 | 2 | 44 | 0 | 0 | 14 | 50 | 0 | 0 | 9 | 9 | 0 | 0 | 26 | 26 |
| | Sidewalk B | 26 | 15 | 14 | 12 | 18 | 62 | 76 | 86 | 9 | 39 | 18 | 26 | 4 | 9 | 3 | 3 | 19 | 20 | 28 | 28 |
| | Sidewalk C | 6 | 5 | 26 | 14 | 8 | 10 | 28 | 92 | 9 | 7 | 13 | 57 | 2 | 5 | 6 | 11 | 6 | 6 | 34 | 35 |
| | Sidewalk D | 27 | 8 | 0 | 0 | 28 | 68 | 0 | 0 | 20 | 55 | 0 | 0 | 7 | 10 | 0 | 0 | 24 | 30 | 0 | 0 |
| | Corner A & B | 0 | 0 | 4 | 7 | 0 | 0 | 19 | 13 | 0 | 0 | 2 | 7 | 0 | 0 | 0 | 0 | 0 | 0 | 2 | 3 |
| | Corner C & D | 1 | 3 | 0 | 0 | 2 | 8 | 0 | 0 | 3 | 9 | 0 | 0 | 1 | 2 | 0 | 0 | 3 | 4 | 0 | 0 |
| | Crosswalk (A-B-C) | 3 | 2 | 25 | 13 | 29 | 32 | 28 | 85 | 6 | 7 | 8 | 49 | 1 | 4 | 5 | 8 | 10 | 10 | 29 | 32 |
| | Crosswalk (C-D-A) | 2 | 0 | 7 | 1 | 5 | 0 | 5 | 7 | 1 | 0 | 14 | 14 | 2 | 2 | 3 | 4 | 0 | 0 | 3 | 3 |
| *Tenth Ave & W. 33rd St* | Sidewalk A | 11 | 17 | 20 | 37 | 162 | 153 | 45 | 59 | 29 | 29 | 11 | 32 | 4 | 8 | 13 | 2 | 35 | 35 | 28 | 27 |
| | Sidewalk B | 19 | 21 | 22 | 18 | 53 | 63 | 94 | 111 | 25 | 25 | 25 | 29 | 10 | 10 | 3 | 7 | 20 | 27 | 34 | 35 |
| | Sidewalk C | 37 | 20 | 17 | 10 | 135 | 186 | 3 | 35 | 42 | 73 | 21 | 26 | 12 | 26 | 8 | 8 | 64 | 73 | 15 | 22 |
| | Sidewalk D | 21 | 13 | 26 | 12 | 6 | 46 | 79 | 101 | 7 | 41 | 21 | 28 | 18 | 8 | 2 | 4 | 24 | 29 | 27 | 31 |
| | Corner A & B | 0 | 2 | 1 | 3 | 11 | 11 | 12 | 4 | 5 | 2 | 3 | 5 | 0 | 0 | 0 | 0 | 0 | 2 | 2 | 2 |
| | Corner C & D | 2 | 7 | 2 | 0 | 4 | 8 | 8 | 2 | 5 | 8 | 1 | 1 | 1 | 2 | 1 | 0 | 8 | 4 | 0 | 0 |
| | Crosswalk (A-B-C) | 19 | 23 | 22 | 14 | 125 | 139 | 63 | 68 | 20 | 25 | 20 | 29 | 4 | 13 | 18 | 6 | 28 | 30 | 19 | 22 |
| | Crosswalk (C-D-A) | 32 | 19 | 20 | 9 | 117 | 142 | 52 | 109 | 28 | 64 | 22 | 34 | 8 | 12 | 5 | 4 | 45 | 51 | 30 | 31 |
| *Tenth Ave & W. 34th St* | Sidewalk A | 28 | 89 | 15 | 15 | 78 | 68 | 57 | 67 | 74 | 29 | 16 | 39 | 16 | 22 | 7 | 12 | 45 | 43 | 20 | 18 |
| | Sidewalk B | 12 | 21 | 17 | 84 | 47 | 51 | 66 | 69 | 23 | 20 | 68 | 36 | 11 | 24 | 22 | 26 | 15 | 17 | 53 | 52 |
| | Sidewalk C | 38 | 116 | 32 | 22 | 93 | 87 | 82 | 83 | 99 | 68 | 33 | 42 | 46 | 25 | 13 | 11 | 44 | 44 | 24 | 24 |
| | Sidewalk D | 12 | 15 | 18 | 72 | 48 | 59 | 73 | 54 | 14 | 18 | 94 | 41 | 9 | 13 | 35 | 17 | 16 | 18 | 39 | 32 |
| | Corner A & B | 6 | 3 | 2 | 7 | 3 | 4 | 1 | 1 | 7 | 2 | 12 | 6 | 1 | 9 | 4 | 5 | 1 | 0 | 2 | 1 |
| | Corner C & D | 13 | 11 | 3 | 2 | 34 | 36 | 4 | 8 | 13 | 38 | 6 | 9 | 4 | 6 | 1 | 1 | 5 | 7 | 0 | 2 |
| | Crosswalk (A-B-C) | 17 | 88 | 17 | 20 | 81 | 68 | 49 | 55 | 76 | 34 | 27 | 23 | 12 | 13 | 12 | 19 | 48 | 45 | 22 | 18 |
| | Crosswalk (C-D-A) | 20 | 71 | 15 | 16 | 69 | 65 | 58 | 62 | 92 | 35 | 24 | 30 | 34 | 25 | 5 | 7 | 41 | 34 | 17 | 19 |
| *Tenth Ave & W. 35th St* | Sidewalk A | 2 | 31 | 8 | 7 | 43 | 28 | 31 | 41 | 40 | 3 | 8 | 30 | | | | | | | | |
| | Sidewalk B | 3 | 5 | 2 | 44 | 38 | 38 | 32 | 34 | 31 | 37 | 53 | 9 | | | | | | | | |
| | Sidewalk C | 4 | 19 | 1 | 2 | 1 | 0 | 44 | 30 | 1 | 0 | 28 | 22 | | | | | | | | |
| | Sidewalk D | 18 | 7 | 5 | 24 | 35 | 29 | 18 | 17 | 13 | 25 | 11 | 10 | | | | | | | | |
| | Corner A & B | 0 | 0 | 1 | 0 | 16 | 9 | 4 | 1 | 0 | 1 | 10 | 4 | | | | | | | | |
| | Corner C & D | 0 | 0 | 6 | 0 | 0 | 0 | 9 | 11 | 0 | 0 | 2 | 3 | | | | | | | | |
| | Crosswalk (A-B-C) | 2 | 59 | 4 | 2 | 37 | 36 | 40 | 33 | 50 | 8 | 23 | 20 | | | | | | | | |
| | Crosswalk (C-D-A) | 6 | 21 | 8 | 9 | 12 | 20 | 41 | 53 | 22 | 11 | 13 | 40 | | | | | | | | |

# Appendix S.5.2

**PEDESTRIAN VOLUMES (SIDEWALKS, CORNERS, AND CROSSWALKS)**
**2010 FUTURE WITHOUT THE PROPOSED ACTION**

| Intersection | Elements | Weekday AM Peak 15-Min. | | | | Weekday MD Peak 15-Min. | | | | Weekday PM Peak 15-Min. | | | | Special Events Evening Peak 15-Min. | | | | Special Events Sunday Peak 15-Min. | | | |
|---|---|---|---|---|---|---|---|---|---|---|---|---|---|---|---|---|---|---|---|---|---|
| ***Tenth Ave & W. 36th St*** | Sidewalk A | 3 | 12 | 6 | 4 | 23 | 26 | 31 | 37 | 3 | 3 | 15 | 19 | | | | | | | | |
| | Sidewalk B | 10 | 3 | 3 | 12 | 22 | 32 | 23 | 18 | 17 | 16 | 13 | 5 | | | | | | | | |
| | Sidewalk C | 0 | 18 | 13 | 3 | 17 | 22 | 25 | 26 | 24 | 8 | 20 | 20 | | | | | | | | |
| | Sidewalk D | 6 | 5 | 0 | 12 | 32 | 28 | 8 | 17 | 15 | 22 | 21 | 3 | | | | | | | | |
| | Corner A & B | 0 | 0 | 0 | 0 | 2 | 8 | 7 | 0 | 0 | 0 | 1 | 1 | | | | | | | | |
| | Corner C & D | 0 | 0 | 0 | 0 | 1 | 2 | 3 | 0 | 1 | 0 | 0 | 3 | | | | | | | | |
| | Crosswalk (A-B-C) | 2 | 13 | 80 | 27 | 29 | 26 | 26 | 18 | 24 | 6 | 19 | 22 | | | | | | | | |
| | Crosswalk (C-D-A) | 13 | 57 | 40 | 32 | 13 | 19 | 31 | 35 | 85 | 1 | 17 | 46 | | | | | | | | |
| ***Tenth Ave & W. 37th St*** | Sidewalk A | 10 | 5 | 7 | 4 | 24 | 26 | 20 | 27 | 6 | 13 | 12 | 8 | | | | | | | | |
| | Sidewalk B | 20 | 9 | 6 | 17 | 39 | 29 | 16 | 20 | 19 | 11 | 16 | 5 | | | | | | | | |
| | Sidewalk C | 12 | 21 | 9 | 11 | 13 | 22 | 17 | 24 | 10 | 7 | 16 | 14 | | | | | | | | |
| | Sidewalk D | 2 | 5 | 8 | 8 | 22 | 25 | 7 | 5 | 7 | 12 | 5 | 9 | | | | | | | | |
| | Corner A & B | 1 | 1 | 3 | 3 | 2 | 2 | 5 | 3 | 5 | 2 | 6 | 10 | | | | | | | | |
| | Corner C & D | 9 | 8 | 3 | 1 | 8 | 5 | 2 | 2 | 0 | 1 | 3 | 4 | | | | | | | | |
| | Crosswalk (A-B-C) | 10 | 18 | 10 | 31 | 21 | 23 | 27 | 29 | 19 | 10 | 10 | 13 | | | | | | | | |
| | Crosswalk (C-D-A) | 5 | 3 | 14 | 11 | 13 | 11 | 25 | 32 | 7 | 13 | 7 | 13 | | | | | | | | |
| ***Tenth Ave & W. 38th St*** | Sidewalk A | 7 | 6 | 8 | 12 | 8 | 6 | 18 | 27 | 26 | 7 | 9 | 12 | | | | | | | | |
| | Sidewalk B | 8 | 12 | 4 | 11 | 31 | 26 | 19 | 22 | 10 | 13 | 10 | 8 | | | | | | | | |
| | Sidewalk C | 1 | 3 | 6 | 5 | 7 | 11 | 20 | 24 | 9 | 7 | 17 | 10 | | | | | | | | |
| | Sidewalk D | 9 | 6 | 2 | 3 | 21 | 23 | 10 | 9 | 14 | 6 | 11 | 4 | | | | | | | | |
| | Corner A & B | 0 | 2 | 0 | 3 | 1 | 5 | 5 | 6 | 1 | 1 | 0 | 1 | | | | | | | | |
| | Corner C & D | 0 | 0 | 1 | 0 | 3 | 4 | 2 | 3 | 0 | 1 | 2 | 2 | | | | | | | | |
| | Crosswalk (A-B-C) | 5 | 3 | 2 | 9 | 13 | 18 | 23 | 25 | 11 | 5 | 17 | 12 | | | | | | | | |
| | Crosswalk (C-D-A) | 0 | 3 | 3 | 11 | 9 | 12 | 21 | 20 | 14 | 4 | 12 | 10 | | | | | | | | |
| ***Tenth Ave & W. 39th St*** | Sidewalk A | 8 | 7 | 5 | 6 | 23 | 23 | 23 | 28 | 14 | 16 | 7 | 10 | | | | | | | | |
| | Sidewalk B | 8 | 10 | 8 | 7 | 26 | 33 | 23 | 23 | 12 | 14 | 14 | 18 | | | | | | | | |
| | Sidewalk C | 8 | 15 | 13 | 13 | 24 | 18 | 27 | 30 | 24 | 15 | 25 | 10 | | | | | | | | |
| | Sidewalk D | 5 | 8 | 7 | 8 | 29 | 28 | 21 | 19 | 9 | 10 | 18 | 18 | | | | | | | | |
| | Corner A & B | 0 | 0 | 0 | 0 | 0 | 0 | 1 | 0 | 0 | 0 | 0 | 0 | | | | | | | | |
| | Corner C & D | 7 | 0 | 0 | 0 | 1 | 1 | 2 | 0 | 0 | 2 | 1 | 0 | | | | | | | | |
| | Crosswalk (A-B-C) | 8 | 7 | 13 | 8 | 23 | 23 | 27 | 33 | 14 | 17 | 20 | 11 | | | | | | | | |
| | Crosswalk (C-D-A) | 7 | 12 | 5 | 6 | 19 | 19 | 23 | 28 | 26 | 18 | 15 | 14 | | | | | | | | |
| ***Tenth Ave & W. 40th St*** | Sidewalk A | 5 | 3 | 2 | 5 | 19 | 10 | 22 | 20 | 6 | 9 | 21 | 12 | | | | | | | | |
| | Sidewalk B | 13 | 26 | 5 | 8 | 21 | 27 | 28 | 34 | 25 | 27 | 17 | 20 | | | | | | | | |
| | Sidewalk C | 4 | 5 | 11 | 25 | 22 | 23 | 31 | 41 | 6 | 5 | 18 | 20 | | | | | | | | |
| | Sidewalk D | 4 | 5 | 2 | 4 | 23 | 26 | 10 | 8 | 23 | 12 | 2 | 2 | | | | | | | | |
| | Corner A & B | 0 | 0 | 0 | 5 | 5 | 3 | 9 | 7 | 0 | 2 | 9 | 10 | | | | | | | | |
| | Corner C & D | 2 | 0 | 1 | 0 | 15 | 17 | 2 | 4 | 1 | 4 | 0 | 0 | | | | | | | | |
| | Crosswalk (A-B-C) | 6 | 5 | 10 | 21 | 26 | 24 | 9 | 13 | 8 | 11 | 15 | 18 | | | | | | | | |
| | Crosswalk (C-D-A) | 2 | 3 | 3 | 5 | 8 | 9 | 23 | 26 | 4 | 2 | 21 | 10 | | | | | | | | |
| ***Tenth Ave & W. 41st St*** | Sidewalk A | 32 | 14 | 19 | 24 | 27 | 13 | 26 | 32 | 30 | 17 | 19 | 17 | | | | | | | | |
| | Sidewalk B | 20 | 41 | 44 | 7 | 50 | 48 | 60 | 42 | 50 | 32 | 34 | 28 | | | | | | | | |
| | Sidewalk C | 4 | 2 | 8 | 20 | 26 | 34 | 35 | 35 | 7 | 19 | 35 | 27 | | | | | | | | |
| | Sidewalk D | 5 | 13 | 0 | 0 | 16 | 19 | 2 | 8 | 24 | 16 | 3 | 8 | | | | | | | | |
| | Corner A & B | 3 | 4 | 3 | 8 | 2 | 6 | 22 | 20 | 3 | 4 | 11 | 4 | | | | | | | | |
| | Corner C & D | 0 | 0 | 0 | 0 | 3 | 1 | 0 | 0 | 7 | 1 | 1 | 2 | | | | | | | | |
| | Crosswalk (A-B-C) | 42 | 9 | 9 | 27 | 41 | 19 | 29 | 26 | 40 | 18 | 37 | 19 | | | | | | | | |
| | Crosswalk (C-D-A) | 2 | 1 | 6 | 15 | 23 | 22 | 32 | 33 | 8 | 8 | 19 | 15 | | | | | | | | |
| ***Tenth Ave & W. 42nd St*** | Sidewalk A | 134 | 68 | 13 | 11 | 161 | 78 | 47 | 52 | 197 | 101 | 25 | 41 | | | | | | | | |
| | Sidewalk B | 23 | 42 | 154 | 88 | 57 | 52 | 161 | 122 | 33 | 69 | 160 | 157 | | | | | | | | |
| | Sidewalk C | 105 | 57 | 23 | 29 | 112 | 106 | 31 | 32 | 130 | 95 | 28 | 34 | | | | | | | | |
| | Sidewalk D | 37 | 19 | 57 | 35 | 36 | 34 | 93 | 83 | 17 | 31 | 87 | 67 | | | | | | | | |
| | Corner A & B | 16 | 10 | 13 | 10 | 13 | 10 | 33 | 21 | 10 | 7 | 26 | 30 | | | | | | | | |
| | Corner C & D | 9 | 3 | 4 | 3 | 0 | 5 | 0 | 0 | 22 | 66 | 1 | 1 | | | | | | | | |
| | Crosswalk (A-B-C) | 141 | 71 | 22 | 36 | 165 | 103 | 36 | 46 | 168 | 128 | 20 | 66 | | | | | | | | |
| | Crosswalk (C-D-A) | 86 | 46 | 19 | 22 | 111 | 100 | 41 | 51 | 98 | 86 | 27 | 31 | | | | | | | | |
| ***Dyer Ave & W. 42nd St*** | Sidewalk A | 83 | 68 | 0 | 0 | 57 | 48 | 0 | 0 | 143 | 81 | 0 | 0 | | | | | | | | |
| | Sidewalk B | 0 | 0 | 104 | 66 | 0 | 0 | 71 | 54 | 0 | 0 | 148 | 121 | | | | | | | | |
| | Sidewalk C | 33 | 51 | 3 | 5 | 43 | 54 | 1 | 2 | 70 | 59 | 11 | 5 | | | | | | | | |
| | Sidewalk D | 1 | 0 | 43 | 30 | 1 | 4 | 43 | 45 | 3 | 1 | 76 | 44 | | | | | | | | |
| | Corner A & B | 0 | 0 | 0 | 0 | 0 | 0 | 0 | 0 | 0 | 0 | 0 | 0 | | | | | | | | |
| | Corner C & D | 3 | 0 | 0 | 0 | 0 | 1 | 0 | 0 | 0 | 4 | 0 | 0 | | | | | | | | |
| | Crosswalk (A-B-C) | 98 | 66 | 4 | 5 | 72 | 55 | 1 | 5 | 147 | 122 | 4 | 7 | | | | | | | | |
| | Crosswalk (C-D-A) | 38 | 37 | 5 | 2 | 44 | 45 | 3 | 2 | 76 | 74 | 9 | 10 | | | | | | | | |
| ***Ninth Ave & W. 30th St*** | Sidewalk A | 19 | 13 | 211 | 25 | 73 | 105 | 133 | 158 | 21 | 34 | 44 | 70 | 8 | 3 | 28 | 9 | 40 | 41 | 128 | 48 |
| | Sidewalk B | 142 | 54 | 26 | 26 | 280 | 312 | 12 | 36 | 89 | 123 | 12 | 39 | 40 | 43 | 6 | 16 | 150 | 121 | 29 | 31 |
| | Sidewalk C | 45 | 25 | 50 | 49 | 31 | 28 | 164 | 172 | 21 | 49 | 63 | 78 | 9 | 12 | 28 | 32 | 78 | 19 | 93 | 73 |
| | Sidewalk D | 68 | 48 | 254 | 28 | 151 | 155 | 59 | 56 | 62 | 59 | 22 | 88 | 20 | 12 | 25 | 13 | 63 | 101 | 133 | 27 |
| | Corner A & B | 7 | 0 | 3 | 13 | 3 | 1 | 10 | 13 | 3 | 4 | 8 | 11 | 5 | 0 | 1 | 5 | 1 | 13 | 8 | 16 |
| | Corner C & D | 16 | 7 | 7 | 19 | 2 | 8 | 10 | 2 | 4 | 5 | 18 | 4 | 2 | 3 | 4 | 3 | 0 | 18 | 16 | 51 |
| | Crosswalk (A-B-C) | 63 | 24 | 81 | 35 | 78 | 114 | 168 | 211 | 25 | 38 | 67 | 101 | 8 | 13 | 22 | 33 | 60 | 42 | 89 | 76 |
| | Crosswalk (C-D-A) | 86 | 13 | 223 | 37 | 40 | 43 | 143 | 152 | 16 | 54 | 42 | 70 | 10 | 10 | 21 | 9 | 95 | 22 | 91 | 53 |
| ***Ninth Ave & W. 31st St*** | Sidewalk A | 20 | 38 | 66 | 57 | 72 | 98 | 43 | 43 | 17 | 20 | 22 | 35 | 5 | 6 | 8 | 21 | 56 | 45 | 21 | 12 |
| | Sidewalk B | 55 | 38 | 94 | 53 | 6 | 12 | 426 | 558 | 41 | 40 | 107 | 113 | 15 | 24 | 12 | 13 | 109 | 11 | 194 | 235 |
| | Sidewalk C | 88 | 130 | 146 | 50 | 51 | 52 | 220 | 274 | 86 | 36 | 126 | 115 | 16 | 12 | 34 | 36 | 14 | 7 | 105 | 93 |
| | Sidewalk D | 34 | 24 | 34 | 49 | 160 | 179 | 86 | 61 | 45 | 54 | 61 | 6 | 11 | 26 | 5 | 2 | 61 | 56 | 3 | 8 |
| | Corner A & B | 4 | 10 | 5 | 29 | 1 | 0 | 9 | 5 | 39 | 116 | 39 | 116 | 2 | 0 | 0 | 1 | 5 | 1 | 9 | 59 |
| | Corner C & D | 46 | 47 | 4 | 9 | 9 | 2 | 49 | 52 | 33 | 114 | 17 | 68 | 7 | 9 | 0 | 0 | 2 | 3 | 3 | 3 |
| | Crosswalk (A-B-C) | 20 | 27 | 74 | 90 | 149 | 197 | 283 | 353 | 37 | 42 | 87 | 106 | 3 | 4 | 20 | 32 | 79 | 71 | 161 | 113 |
| | Crosswalk (C-D-A) | 60 | 81 | 59 | 25 | 102 | 122 | 95 | 110 | 55 | 25 | 28 | 45 | 9 | 5 | 8 | 24 | 30 | 42 | 32 | 29 |
| ***Ninth Ave & W. 33rd St*** | Sidewalk A | 20 | 93 | 34 | 156 | 101 | 151 | 105 | 149 | 24 | 27 | 177 | 20 | 12 | 8 | 22 | 13 | 34 | 45 | 32 | 33 |
| | Sidewalk B | 65 | 100 | 27 | 121 | 285 | 261 | 93 | 152 | 112 | 73 | 23 | 16 | 45 | 45 | 14 | 11 | 153 | 148 | 38 | 40 |
| | Sidewalk C | 153 | 353 | 37 | 25 | 538 | 623 | 66 | 93 | 156 | 279 | 3 | 43 | 59 | 34 | 26 | 24 | 206 | 201 | 59 | 31 |
| | Sidewalk D | 29 | 72 | 69 | 324 | 92 | 138 | 183 | 224 | 52 | 12 | 87 | 71 | 14 | 7 | 64 | 19 | 15 | 19 | 62 | 84 |
| | Corner A & B | 2 | 28 | 15 | 53 | 2 | 5 | 29 | 55 | 95 | 80 | 131 | 80 | 5 | 0 | 10 | 7 | 4 | 1 | 37 | 35 |
| | Corner C & D | 12 | 7 | 1 | 4 | 12 | 33 | 19 | 29 | 67 | 163 | 59 | 53 | 1 | 2 | 0 | 1 | 3 | 4 | 0 | 2 |
| | Crosswalk (A-B-C) | 35 | 151 | 75 | 91 | 133 | 153 | 344 | 389 | 23 | 61 | 189 | 166 | 11 | 13 | 30 | 42 | 41 | 40 | 138 | 147 |
| | Crosswalk (C-D-A) | 63 | 327 | 32 | 151 | 241 | 307 | 176 | 164 | 202 | 142 | 154 | 37 | 32 | 33 | 16 | 4 | 100 | 99 | 49 | 34 |

# Appendix S.5.2

**PEDESTRIAN VOLUMES (SIDEWALKS, CORNERS, AND CROSSWALKS)**
**2010 FUTURE WITHOUT THE PROPOSED ACTION**

| Intersection | Elements | Weekday AM Peak 15-Min. | | | | Weekday MD Peak 15-Min. | | | | Weekday PM Peak 15-Min. | | | | Special Events Evening Peak 15-Min. | | | | Special Events Sunday Peak 15-Min. | | | |
|---|---|---|---|---|---|---|---|---|---|---|---|---|---|---|---|---|---|---|---|---|---|
| ***Ninth Ave & W. 34th St*** | Sidewalk A | 65 | 80 | 70 | 73 | 143 | 153 | 142 | 170 | 108 | 89 | 165 | 109 | 28 | 24 | 26 | 47 | 65 | 55 | 27 | 62 |
| | Sidewalk B | 85 | 85 | 73 | 164 | 231 | 176 | 160 | 129 | 160 | 132 | 264 | 104 | 31 | 67 | 59 | 70 | 102 | 98 | 119 | 89 |
| | Sidewalk C | 87 | 138 | 33 | 109 | 179 | 156 | 346 | 304 | 287 | 79 | 166 | 159 | 89 | 63 | 49 | 42 | 148 | 109 | 161 | 171 |
| | Sidewalk D | 35 | 121 | 52 | 153 | 129 | 239 | 155 | 136 | 224 | 60 | 200 | 75 | 25 | 14 | 51 | 24 | 40 | 33 | 83 | 63 |
| | Corner A & B | 145 | 193 | 137 | 191 | 33 | 40 | 17 | 12 | 87 | 170 | 83 | 164 | 1 | 6 | 24 | 14 | 1 | 4 | 11 | 8 |
| | Corner C & D | 127 | 130 | 114 | 112 | 64 | 78 | 43 | 71 | 64 | 139 | 56 | 107 | 20 | 24 | 5 | 4 | 44 | 52 | 9 | 6 |
| | Crosswalk (A-B-C) | 100 | 136 | 61 | 146 | 170 | 142 | 288 | 259 | 376 | 135 | 181 | 200 | 52 | 35 | 42 | 51 | 103 | 72 | 141 | 129 |
| | Crosswalk (C-D-A) | 71 | 212 | 37 | 97 | 135 | 152 | 124 | 147 | 230 | 104 | 222 | 73 | 41 | 43 | 26 | 19 | 96 | 78 | 23 | 33 |
| ***Ninth Ave & W. 37th St*** | Sidewalk A | 17 | 14 | 32 | 248 | 44 | 47 | 41 | 252 | 66 | 17 | 85 | 222 | | | | | | | | |
| | Sidewalk B | 61 | 109 | 14 | 77 | 123 | 121 | 31 | 104 | 148 | 97 | 50 | 81 | | | | | | | | |
| | Sidewalk C | 23 | 26 | 78 | 112 | 29 | 34 | 162 | 112 | 42 | 23 | 204 | 73 | | | | | | | | |
| | Sidewalk D | 21 | 236 | 12 | 15 | 57 | 243 | 40 | 21 | 40 | 233 | 55 | 11 | | | | | | | | |
| | Corner A & B | 6 | 71 | 8 | 6 | 11 | 73 | 13 | 12 | 15 | 68 | 6 | 6 | | | | | | | | |
| | Corner C & D | 14 | 14 | 4 | 1 | 16 | 14 | 2 | 3 | 7 | 10 | 0 | 6 | | | | | | | | |
| | Crosswalk (A-B-C) | 10 | 10 | 62 | 97 | 39 | 50 | 136 | 109 | 80 | 22 | 203 | 80 | | | | | | | | |
| | Crosswalk (C-D-A) | 12 | 9 | 31 | 239 | 41 | 21 | 43 | 248 | 53 | 14 | 69 | 220 | | | | | | | | |
| ***Ninth Ave & W. 38th St*** | Sidewalk A | 4 | 4 | 23 | 42 | 15 | 19 | 60 | 92 | 26 | 12 | 46 | 73 | | | | | | | | |
| | Sidewalk B | 42 | 73 | 1 | 24 | 46 | 60 | 25 | 27 | 47 | 71 | 38 | 50 | | | | | | | | |
| | Sidewalk C | 14 | 21 | 80 | 69 | 13 | 23 | 41 | 50 | 15 | 10 | 82 | 90 | | | | | | | | |
| | Sidewalk D | 24 | 18 | 12 | 6 | 62 | 44 | 19 | 33 | 42 | 48 | 13 | 9 | | | | | | | | |
| | Corner A & B | 2 | 7 | 1 | 8 | 9 | 8 | 5 | 10 | 7 | 4 | 9 | 9 | | | | | | | | |
| | Corner C & D | 4 | 6 | 0 | 1 | 12 | 11 | 0 | 5 | 4 | 5 | 1 | 3 | | | | | | | | |
| | Crosswalk (A-B-C) | 13 | 2 | 77 | 75 | 13 | 8 | 53 | 54 | 24 | 23 | 108 | 65 | | | | | | | | |
| | Crosswalk (C-D-A) | 5 | 10 | 41 | 25 | 10 | 13 | 55 | 67 | 20 | 20 | 50 | 29 | | | | | | | | |
| ***Ninth Ave & W. 39th St*** | Sidewalk A | 16 | 25 | 26 | 57 | 24 | 30 | 48 | 60 | 27 | 25 | 92 | 50 | | | | | | | | |
| | Sidewalk B | 48 | 145 | 24 | 21 | 99 | 93 | 36 | 54 | 194 | 92 | 39 | 39 | | | | | | | | |
| | Sidewalk C | 30 | 25 | 42 | 110 | 54 | 49 | 111 | 94 | 41 | 42 | 194 | 91 | | | | | | | | |
| | Sidewalk D | 47 | 45 | 14 | 11 | 87 | 61 | 28 | 23 | 92 | 62 | 22 | 23 | | | | | | | | |
| | Corner A & B | 2 | 10 | 8 | 6 | 0 | 4 | 6 | 8 | 6 | 4 | 7 | 5 | | | | | | | | |
| | Corner C & D | 10 | 3 | 0 | 4 | 7 | 18 | 0 | 3 | 7 | 7 | 3 | 4 | | | | | | | | |
| | Crosswalk (A-B-C) | 19 | 21 | 40 | 118 | 34 | 37 | 109 | 82 | 44 | 46 | 201 | 99 | | | | | | | | |
| | Crosswalk (C-D-A) | 31 | 19 | 24 | 51 | 63 | 38 | 35 | 34 | 47 | 42 | 89 | 38 | | | | | | | | |
| ***Ninth Ave & W. 42nd St*** | Sidewalk A | 177 | 69 | 95 | 83 | 185 | 135 | 193 | 144 | 270 | 145 | 194 | 158 | | | | | | | | |
| | Sidewalk B | 94 | 109 | 185 | 129 | 144 | 137 | 207 | 174 | 173 | 164 | 280 | 221 | | | | | | | | |
| | Sidewalk C | 184 | 149 | 139 | 134 | 212 | 256 | 154 | 118 | 211 | 217 | 192 | 158 | | | | | | | | |
| | Sidewalk D | 42 | 37 | 140 | 60 | 100 | 120 | 148 | 131 | 92 | 93 | 138 | 138 | | | | | | | | |
| | Corner A & B | 14 | 17 | 11 | 20 | 25 | 32 | 23 | 30 | 17 | 37 | 21 | 38 | | | | | | | | |
| | Corner C & D | 32 | 11 | 5 | 6 | 30 | 33 | 2 | 8 | 24 | 24 | 11 | 5 | | | | | | | | |
| | Crosswalk (A-B-C) | 196 | 88 | 106 | 154 | 197 | 167 | 155 | 163 | 294 | 215 | 174 | 242 | | | | | | | | |
| | Crosswalk (C-D-A) | 152 | 109 | 107 | 78 | 188 | 208 | 147 | 129 | 186 | 181 | 184 | 196 | | | | | | | | |
| ***Eighth Ave & W. 30th St*** | Sidewalk A | 51 | 20 | 95 | 92 | 33 | 46 | 196 | 260 | 24 | 51 | 133 | 141 | 17 | 32 | 67 | 59 | 56 | 44 | 127 | 120 |
| | Sidewalk B | 107 | 246 | 33 | 13 | 170 | 223 | 64 | 93 | 235 | 185 | 56 | 89 | 156 | 105 | 26 | 57 | 116 | 126 | 37 | 35 |
| | Sidewalk C | 45 | 25 | 52 | 115 | 54 | 66 | 117 | 81 | 21 | 34 | 183 | 102 | 11 | 27 | 78 | 31 | 17 | 16 | 74 | 71 |
| | Sidewalk D | 77 | 82 | 29 | 12 | 134 | 172 | 27 | 31 | 112 | 111 | 21 | 43 | 77 | 56 | 21 | 26 | 80 | 66 | 35 | 37 |
| | Corner A & B | 28 | 12 | 40 | 13 | 17 | 20 | 36 | 38 | 9 | 28 | 42 | 56 | 9 | 20 | 18 | 39 | 29 | 23 | 19 | 8 |
| | Corner C & D | 12 | 8 | 0 | 11 | 16 | 14 | 10 | 10 | 5 | 9 | 0 | 3 | 5 | 1 | 4 | 2 | 1 | 7 | 16 | 9 |
| | Crosswalk (A-B-C) | 18 | 52 | 56 | 127 | 39 | 53 | 120 | 125 | 27 | 44 | 187 | 125 | 10 | 16 | 64 | 33 | 31 | 29 | 75 | 73 |
| | Crosswalk (C-D-A) | 33 | 16 | 69 | 73 | 33 | 53 | 112 | 136 | 20 | 37 | 113 | 119 | 19 | 12 | 61 | 45 | 21 | 19 | 84 | 70 |
| ***Eighth Ave & W. 31st St*** | Sidewalk A | 149 | 92 | 52 | 140 | 292 | 195 | 43 | 170 | 157 | 71 | 89 | 194 | 65 | 19 | 65 | 99 | 137 | 85 | 70 | 105 |
| | Sidewalk B | 36 | 98 | 119 | 213 | 87 | 66 | 265 | 173 | 117 | 95 | 214 | 98 | 68 | 53 | 101 | 25 | 135 | 136 | 185 | 122 |
| | Sidewalk C | 14 | 23 | 53 | 79 | 47 | 46 | 164 | 87 | 19 | 29 | 131 | 34 | 0 | 20 | 142 | 68 | 23 | 16 | 110 | 98 |
| | Sidewalk D | 54 | 53 | 30 | 94 | 145 | 120 | 93 | 65 | 69 | 87 | 59 | 68 | 119 | 123 | 69 | 55 | 82 | 84 | 14 | 9 |
| | Corner A & B | 19 | 37 | 21 | 16 | 26 | 42 | 30 | 26 | 26 | 21 | 30 | 22 | 20 | 9 | 36 | 78 | 8 | 9 | 35 | 31 |
| | Corner C & D | 11 | 7 | 21 | 10 | 6 | 6 | 26 | 31 | 6 | 6 | 16 | 18 | 1 | 3 | 40 | 53 | 6 | 9 | 2 | 2 |
| | Crosswalk (A-B-C) | 126 | 144 | 81 | 206 | 281 | 195 | 110 | 164 | 219 | 99 | 128 | 132 | 81 | 61 | 119 | 75 | 119 | 79 | 131 | 74 |
| | Crosswalk (C-D-A) | 34 | 84 | 83 | 92 | 80 | 121 | 172 | 189 | 60 | 82 | 151 | 111 | 31 | 27 | 62 | 60 | 48 | 42 | 100 | 90 |
| ***Eighth Ave & W. 33rd St*** | Sidewalk A | 142 | 290 | 360 | 376 | 192 | 168 | 638 | 400 | 97 | 126 | 705 | 272 | 41 | 27 | 236 | 146 | 116 | 45 | 329 | 228 |
| | Sidewalk B | 161 | 152 | 219 | 209 | 200 | 128 | 190 | 148 | 352 | 84 | 203 | 190 | 85 | 233 | 69 | 119 | 299 | 252 | 109 | 116 |
| | Sidewalk C | 208 | 275 | 225 | 127 | 462 | 422 | 231 | 187 | 319 | 386 | 186 | 331 | 108 | 253 | 160 | 229 | 223 | 209 | 100 | 80 |
| | Sidewalk D | 165 | 166 | 268 | 205 | 277 | 197 | 743 | 586 | 305 | 100 | 583 | 241 | 145 | 78 | 186 | 65 | 159 | 81 | 289 | 199 |
| | Corner A & B | 17 | 16 | 29 | 16 | 37 | 22 | 69 | 54 | 56 | 40 | 51 | 56 | 7 | 7 | 32 | 28 | 32 | 12 | 45 | 38 |
| | Corner C & D | 30 | 23 | 21 | 29 | 68 | 80 | 65 | 72 | 39 | 80 | 55 | 63 | 23 | 26 | 40 | 26 | 121 | 62 | 14 | 20 |
| | Crosswalk (A-B-C) | 299 | 238 | 283 | 132 | 234 | 258 | 351 | 310 | 534 | 232 | 633 | 169 | 73 | 130 | 127 | 265 | 139 | 120 | 186 | 235 |
| | Crosswalk (C-D-A) | 425 | 269 | 706 | 338 | 533 | 405 | 575 | 372 | 471 | 293 | 728 | 222 | 219 | 130 | 375 | 190 | 252 | 176 | 321 | 162 |
| ***Eighth Ave & W. 34th St*** | Sidewalk A | 215 | 90 | 75 | 143 | 164 | 109 | 240 | 241 | 248 | 147 | 285 | 171 | 88 | 76 | 38 | 54 | 176 | 110 | 166 | 156 |
| | Sidewalk B | 144 | 89 | 112 | 158 | 117 | 99 | 217 | 222 | 170 | 95 | 161 | 243 | 102 | 124 | 147 | 247 | 231 | 221 | 308 | 275 |
| | Sidewalk C | 79 | 136 | 168 | 41 | 141 | 146 | 125 | 76 | 165 | 120 | 167 | 74 | 137 | 73 | 36 | 49 | 254 | 186 | 168 | 206 |
| | Sidewalk D | 212 | 157 | 104 | 68 | 384 | 261 | 125 | 61 | 390 | 203 | 155 | 66 | 202 | 64 | 38 | 49 | 280 | 153 | 242 | 215 |
| | Corner A & B | 26 | 31 | 49 | 48 | 37 | 42 | 54 | 58 | 53 | 53 | 108 | 111 | 84 | 179 | 763 | 906 | 11 | 22 | 112 | 32 |
| | Corner C & D | 20 | 16 | 21 | 16 | 49 | 26 | 19 | 26 | 53 | 31 | 42 | 42 | 119 | 239 | 143 | 54 | 22 | 23 | 42 | 19 |
| | Crosswalk (A-B-C) | 173 | 156 | 167 | 139 | 356 | 291 | 262 | 224 | 396 | 248 | 230 | 338 | 101 | 60 | 167 | 255 | 231 | 135 | 181 | 109 |
| | Crosswalk (C-D-A) | 137 | 190 | 189 | 169 | 210 | 236 | 398 | 365 | 250 | 156 | 433 | 245 | 725 | 859 | 98 | 59 | 347 | 150 | 192 | 183 |
| ***Eighth Ave & W. 37th St*** | Sidewalk A | 21 | 39 | 208 | 227 | 179 | 109 | 78 | 123 | 42 | 30 | 263 | 193 | | | | | | | | |
| | Sidewalk B | 148 | 274 | 102 | 34 | 216 | 246 | 64 | 63 | 386 | 350 | 27 | 103 | | | | | | | | |
| | Sidewalk C | 54 | 24 | 171 | 174 | 65 | 138 | 82 | 84 | 74 | 53 | 296 | 226 | | | | | | | | |
| | Sidewalk D | 171 | 235 | 46 | 26 | 222 | 117 | 150 | 64 | 415 | 243 | 69 | 90 | | | | | | | | |
| | Corner A & B | 14 | 18 | 66 | 33 | 24 | 23 | 23 | 22 | 24 | 16 | 18 | 14 | | | | | | | | |
| | Corner C & D | 21 | 25 | 24 | 26 | 25 | 18 | 29 | 29 | 73 | 21 | 91 | 30 | | | | | | | | |
| | Crosswalk (A-B-C) | 51 | 40 | 168 | 174 | 171 | 125 | 180 | 196 | 41 | 81 | 260 | 309 | | | | | | | | |
| | Crosswalk (C-D-A) | 47 | 53 | 218 | 231 | 149 | 175 | 298 | 212 | 45 | 115 | 427 | 201 | | | | | | | | |
| ***Eighth Ave & W. 38th St*** | Sidewalk A | 30 | 55 | 70 | 168 | 40 | 44 | 138 | 124 | 22 | 25 | 248 | 270 | | | | | | | | |
| | Sidewalk B | 62 | 245 | 115 | 31 | 48 | 147 | 31 | 6 | 131 | 281 | 42 | 58 | | | | | | | | |
| | Sidewalk C | 33 | 29 | 63 | 102 | 100 | 14 | 112 | 126 | 21 | 23 | 188 | 488 | | | | | | | | |
| | Sidewalk D | 80 | 197 | 21 | 24 | 135 | 154 | 53 | 49 | 151 | 286 | 2 | 2 | | | | | | | | |
| | Corner A & B | 23 | 85 | 79 | 26 | 193 | 153 | 159 | 122 | 12 | 20 | 11 | 16 | | | | | | | | |
| | Corner C & D | 27 | 32 | 9 | 11 | 149 | 109 | 109 | 81 | 16 | 16 | 11 | 16 | | | | | | | | |
| | Crosswalk (A-B-C) | 28 | 17 | 47 | 93 | 19 | 20 | 130 | 99 | 5 | 13 | 24 | 16 | | | | | | | | |
| | Crosswalk (C-D-A) | 27 | 27 | 66 | 169 | 61 | 68 | 91 | 69 | 50 | 25 | 8 | 12 | | | | | | | | |

# Appendix S.5.2

**PEDESTRIAN VOLUMES (SIDEWALKS, CORNERS, AND CROSSWALKS)**
**2010 FUTURE WITHOUT THE PROPOSED ACTION**

| Intersection | Elements | Weekday AM Peak 15-Min. | | | | Weekday MD Peak 15-Min. | | | | Weekday PM Peak 15-Min. | | | | Special Events Evening Peak 15-Min. | | | | Special Events Sunday Peak 15-Min. | | | |
|---|---|---|---|---|---|---|---|---|---|---|---|---|---|---|---|---|---|---|---|---|---|
| ***Eighth Ave & W. 39th St*** | Sidewalk A | 52 | 72 | 54 | 539 | 118 | 76 | 261 | 386 | 115 | 38 | 651 | 216 | | | | | | | | |
| | Sidewalk B | 81 | 1268 | 229 | 55 | 277 | 470 | 137 | 174 | 890 | 320 | 30 | 132 | | | | | | | | |
| | Sidewalk C | 129 | 47 | 127 | 430 | 134 | 209 | 317 | 259 | 47 | 180 | 623 | 192 | | | | | | | | |
| | Sidewalk D | 152 | 584 | 76 | 68 | 432 | 329 | 144 | 86 | 807 | 168 | 81 | 44 | | | | | | | | |
| | Corner A & B | 12 | 24 | 54 | 22 | 26 | 41 | 32 | 36 | 21 | 27 | 9 | 87 | | | | | | | | |
| | Corner C & D | 37 | 20 | 17 | 53 | 36 | 67 | 24 | 28 | 12 | 21 | 11 | 17 | | | | | | | | |
| | Crosswalk (A-B-C) | 109 | 21 | 99 | 628 | 104 | 98 | 227 | 296 | 59 | 79 | 467 | 310 | | | | | | | | |
| | Crosswalk (C-D-A) | 66 | 78 | 129 | 470 | 94 | 683 | 363 | 315 | 69 | 148 | 1051 | 162 | | | | | | | | |
| ***Eighth Ave & W. 42nd St*** | Sidewalk A | 422 | 265 | 611 | 153 | 359 | 280 | 262 | 295 | 408 | 536 | 256 | 1426 | | | | | | | | |
| | Sidewalk B | 446 | 151 | 305 | 88 | 282 | 315 | 400 | 296 | 395 | 369 | 311 | 224 | | | | | | | | |
| | Sidewalk C | 977 | 311 | 554 | 136 | 556 | 428 | 476 | 511 | 668 | 1158 | 441 | 714 | | | | | | | | |
| | Sidewalk D | 748 | 88 | 354 | 93 | 342 | 373 | 334 | 270 | 227 | 1517 | 408 | 426 | | | | | | | | |
| | Corner A & B | 41 | 42 | 56 | 44 | 4 | 42 | 69 | 102 | 24 | 162 | 92 | 179 | | | | | | | | |
| | Corner C & D | 7 | 224 | 41 | 38 | 24 | 109 | 85 | 75 | 38 | 69 | 56 | 88 | | | | | | | | |
| | Crosswalk (A-B-C) | 243 | 356 | 426 | 132 | 266 | 226 | 422 | 385 | 491 | 272 | 560 | 648 | | | | | | | | |
| | Crosswalk (C-D-A) | 1172 | 216 | 861 | 217 | 379 | 401 | 297 | 307 | 413 | 1085 | 239 | 1221 | | | | | | | | |
| ***Seventh Ave & W. 31st St*** | Sidewalk A | 131 | 115 | 80 | 485 | 212 | 184 | 248 | 293 | 300 | 185 | 411 | 314 | | | | | | | | |
| | Sidewalk B | 299 | 584 | 325 | 201 | 366 | 185 | 117 | 205 | 423 | 234 | 286 | 397 | | | | | | | | |
| | Sidewalk C | 159 | 123 | 102 | 341 | 148 | 133 | 179 | 148 | 232 | 331 | 316 | 323 | | | | | | | | |
| | Sidewalk D | 97 | 703 | 107 | 55 | 296 | 233 | 50 | 39 | 248 | 271 | 205 | 207 | | | | | | | | |
| | Corner A & B | 16 | 1 | 138 | 18 | 16 | 15 | 131 | 34 | 17 | 22 | 100 | 37 | | | | | | | | |
| | Corner C & D | 10 | 48 | 19 | 42 | 37 | 37 | 11 | 16 | 26 | 26 | 26 | 21 | | | | | | | | |
| | Crosswalk (A-B-C) | 392 | 198 | 103 | 294 | 247 | 200 | 211 | 286 | 347 | 365 | 288 | 260 | | | | | | | | |
| | Crosswalk (C-D-A) | 135 | 173 | 98 | 402 | 129 | 115 | 155 | 176 | 252 | 331 | 339 | 275 | | | | | | | | |
| ***Seventh Ave & W. 33rd St*** | Sidewalk A | 188 | 220 | 191 | 390 | 244 | 200 | 340 | 273 | 221 | 351 | 290 | 335 | | | | | | | | |
| | Sidewalk B | 280 | 415 | 275 | 142 | 308 | 443 | 224 | 173 | 267 | 433 | 268 | 322 | | | | | | | | |
| | Sidewalk C | 385 | 178 | 360 | 233 | 269 | 265 | 337 | 248 | 296 | 317 | 283 | 246 | | | | | | | | |
| | Sidewalk D | 538 | 210 | 214 | 320 | 276 | 248 | 378 | 336 | 282 | 417 | 277 | 432 | | | | | | | | |
| | Corner A & B | 42 | 26 | 36 | 61 | 16 | 31 | 63 | 98 | 26 | 16 | 32 | 79 | | | | | | | | |
| | Corner C & D | 26 | 63 | 63 | 37 | 48 | 63 | 42 | 42 | 53 | 26 | 31 | 53 | | | | | | | | |
| | Crosswalk (A-B-C) | 346 | 292 | 329 | 263 | 273 | 307 | 314 | 307 | 347 | 470 | 281 | 347 | | | | | | | | |
| | Crosswalk (C-D-A) | 465 | 423 | 300 | 338 | 382 | 405 | 360 | 335 | 335 | 480 | 322 | 412 | | | | | | | | |
| ***Seventh Ave & W. 34th St*** | Sidewalk A | 187 | 67 | 447 | 120 | 228 | 180 | 244 | 228 | 728 | 331 | 427 | 602 | | | | | | | | |
| | Sidewalk B | 571 | 66 | 171 | 172 | 174 | 155 | 308 | 208 | 258 | 762 | 854 | 127 | | | | | | | | |
| | Sidewalk C | 461 | 330 | 208 | 186 | 221 | 185 | 229 | 185 | 307 | 490 | 266 | 595 | | | | | | | | |
| | Sidewalk D | 183 | 184 | 984 | 118 | 140 | 145 | 153 | 182 | 413 | 360 | 340 | 553 | | | | | | | | |
| | Corner A & B | 210 | 31 | 33 | 104 | 331 | 372 | 287 | 318 | 538 | 494 | 500 | 437 | | | | | | | | |
| | Corner C & D | 72 | 51 | 43 | 32 | 272 | 271 | 195 | 221 | 476 | 379 | 371 | 323 | | | | | | | | |
| | Crosswalk (A-B-C) | 510 | 111 | 282 | 145 | 362 | 333 | 227 | 242 | 101 | 108 | 97 | 101 | | | | | | | | |
| | Crosswalk (C-D-A) | 526 | 194 | 919 | 215 | 225 | 227 | 265 | 270 | 153 | 118 | 87 | 147 | | | | | | | | |
| ***Sixth Ave & W. 33rd St*** | Sidewalk A | 198 | 69 | 205 | 151 | 146 | 79 | 338 | 289 | 186 | 283 | 618 | 490 | | | | | | | | |
| | Sidewalk B | 221 | 179 | 226 | 42 | 236 | 176 | 113 | 170 | 328 | 268 | 113 | 478 | | | | | | | | |
| | Sidewalk C | 302 | 84 | 157 | 165 | 211 | 242 | 239 | 237 | 239 | 470 | 241 | 287 | | | | | | | | |
| | Sidewalk D | 381 | 255 | 232 | 253 | 281 | 323 | 210 | 158 | 583 | 694 | 336 | 519 | | | | | | | | |
| | Corner A & B | 16 | 1 | 16 | 16 | 37 | 37 | 31 | 31 | 32 | 33 | 31 | 74 | | | | | | | | |
| | Corner C & D | 0 | 58 | 29 | 77 | 31 | 31 | 70 | 102 | 63 | 63 | 73 | 139 | | | | | | | | |
| | Crosswalk (A-B-C) | 319 | 127 | 161 | 199 | 286 | 294 | 289 | 229 | 273 | 516 | 402 | 350 | | | | | | | | |
| | Crosswalk (C-D-A) | 344 | 149 | 341 | 157 | 259 | 251 | 330 | 311 | 445 | 615 | 356 | 393 | | | | | | | | |
| ***Sixth Ave & W. 34th St*** | Sidewalk A | 12 | 9 | 1 | 1 | 26 | 25 | 9 | 8 | 18 | 22 | 2 | 2 | 0 | 0 | 0 | 0 | 0 | 0 | 0 | 0 |
| | Sidewalk B | 474 | 365 | 356 | 135 | 801 | 897 | 366 | 539 | 718 | 786 | 598 | 849 | 142 | 155 | 194 | 434 | 439 | 320 | 306 | 235 |
| | Sidewalk C | 409 | 92 | 382 | 348 | 283 | 295 | 789 | 846 | 563 | 489 | 423 | 535 | 218 | 267 | 230 | 174 | 395 | 341 | 210 | 180 |
| | Sidewalk D | 0 | 0 | 12 | 9 | 0 | 1 | 26 | 25 | 0 | 0 | 18 | 22 | 0 | 0 | 0 | 0 | 0 | 0 | 0 | 0 |
| | Corner A & B | 1 | 1 | 84 | 47 | 8 | 6 | 184 | 233 | 2 | 2 | 67 | 411 | 0 | 0 | 51 | 141 | 0 | 0 | 84 | 198 |
| | Corner C & D | 40 | 23 | 0 | 0 | 85 | 50 | 0 | 0 | 29 | 18 | 0 | 0 | 16 | 55 | 0 | 0 | 39 | 21 | 0 | 0 |
| | Crosswalk (A-B-C) | 159 | 417 | 427 | 280 | 806 | 634 | 558 | 705 | 867 | 510 | 304 | 716 | 231 | 129 | 171 | 196 | 295 | 428 | 376 | 322 |
| | Crosswalk (C-D-A) | 603 | 80 | 1 | 0 | 799 | 638 | 2 | 2 | 644 | 718 | 0 | 1 | 197 | 297 | 0 | 0 | 483 | 396 | 0 | 0 |
| ***Broadway & W. 34th St*** | Sidewalk A | 392 | 152 | 724 | 165 | 347 | 482 | 698 | 774 | 719 | 1220 | 742 | 1054 | 393 | 272 | 191 | 282 | 433 | 569 | 430 | 384 |
| | Sidewalk B | 3 | 1 | 12 | 9 | 13 | 11 | 26 | 26 | 3 | 4 | 18 | 22 | 0 | 0 | 0 | 0 | 0 | 0 | 0 | 0 |
| | Sidewalk C | 12 | 9 | 1 | 1 | 26 | 26 | 7 | 8 | 18 | 22 | 2 | 2 | 0 | 0 | 0 | 0 | 0 | 0 | 0 | 0 |
| | Sidewalk D | 553 | 331 | 514 | 168 | 850 | 790 | 667 | 393 | 896 | 859 | 837 | 938 | 310 | 274 | 392 | 451 | 553 | 501 | 561 | 520 |
| | Corner A & B | 235 | 49 | 0 | 0 | 127 | 168 | 0 | 0 | 109 | 440 | 0 | 0 | 39 | 64 | 0 | 0 | 97 | 160 | 0 | 0 |
| | Corner C & D | 0 | 0 | 47 | 236 | 0 | 0 | 262 | 368 | 0 | 0 | 517 | 497 | 0 | 0 | 123 | 111 | 0 | 0 | 180 | 55 |
| | Crosswalk (A-B-C) | 1065 | 184 | 3 | 1 | 973 | 653 | 5 | 5 | 475 | 1080 | 1 | 3 | 342 | 169 | 0 | 0 | 319 | 410 | 0 | 0 |
| | Crosswalk (C-D-A) | 606 | 81 | 529 | 97 | 647 | 804 | 867 | 971 | 646 | 722 | 731 | 1038 | 197 | 298 | 261 | 148 | 283 | 296 | 264 | 254 |

# Appendix S.5.2

**PEDESTRIAN VOLUMES (SIDEWALKS, CORNERS, AND CROSSWALKS)**
**2025 FUTURE WITHOUT THE PROPOSED ACTION**

| Intersection | Elements | Weekday AM Peak 15-Min. | | | | Weekday MD Peak 15-Min. | | | | Weekday PM Peak 15-Min. | | | | Special Events Evening Peak 15-Min. | | | | Special Events Sunday Peak 15-Min. | | | |
|---|---|---|---|---|---|---|---|---|---|---|---|---|---|---|---|---|---|---|---|---|---|
| ***Rt 9A & West 30th St*** | Sidewalk A | 0 | 0 | 23 | 42 | 0 | 0 | 13 | 21 | 0 | 0 | 36 | 19 | 0 | 0 | 18 | 15 | 0 | 0 | 21 | 28 |
| | Sidewalk B | 0 | 0 | 0 | 0 | 2 | 0 | 0 | 0 | 0 | 7 | 1 | 1 | 4 | 6 | 4 | 3 | 0 | 8 | 2 | 1 |
| | Sidewalk C | 2 | 0 | 2 | 2 | 1 | 0 | 1 | 1 | 1 | 2 | 1 | 1 | 0 | 0 | 1 | 2 | 1 | 1 | 0 | 0 |
| | Sidewalk D | 21 | 28 | 0 | 0 | 15 | 21 | 0 | 0 | 33 | 19 | 0 | 0 | 18 | 16 | 0 | 0 | 21 | 28 | 0 | 0 |
| | Corner A & B | 0 | 0 | 0 | 0 | 0 | 0 | 0 | 0 | 0 | 0 | 4 | 0 | 0 | 0 | 4 | 2 | 0 | 0 | 1 | 0 |
| | Corner C & D | 0 | 0 | 0 | 0 | 0 | 0 | 0 | 0 | 0 | 0 | 0 | 0 | 0 | 0 | 0 | 0 | 0 | 0 | 0 | 0 |
| | Crosswalk (A-B-C) | 0 | 0 | 0 | 0 | 0 | 0 | 1 | 2 | 0 | 0 | 0 | 4 | 0 | 0 | 2 | 1 | 0 | 1 | 0 | 7 |
| | Crosswalk (C-D-A) | 6 | 2 | 26 | 39 | 1 | 1 | 16 | 33 | 2 | 1 | 30 | 33 | 0 | 0 | 26 | 16 | 0 | 2 | 21 | 26 |
| ***Rt 9A & West 34th St*** | Sidewalk A | 1 | 1 | 0 | 4 | 0 | 0 | 3 | 4 | 0 | 0 | 0 | 3 | 0 | 0 | 0 | 0 | 0 | 0 | 16 | 20 |
| | Sidewalk B | 0 | 0 | 3 | 11 | 0 | 3 | 10 | 17 | 0 | 1 | 8 | 11 | 1 | 0 | 0 | 2 | 7 | 3 | 3 | 0 |
| | Sidewalk C | 26 | 21 | 0 | 0 | 57 | 47 | 2 | 0 | 45 | 50 | 0 | 0 | 1 | 2 | 1 | 0 | 66 | 55 | 6 | 0 |
| | Sidewalk D | 10 | 1 | 0 | 0 | 2 | 3 | 2 | 0 | 2 | 0 | 0 | 0 | 0 | 0 | 0 | 0 | 17 | 20 | 0 | 0 |
| | Corner A & B | 3 | 0 | 3 | 0 | 8 | 8 | 8 | 8 | 3 | 15 | 3 | 15 | 0 | 0 | 0 | 4 | 0 | 0 | 3 | 0 |
| | Corner C & D | 3 | 0 | 3 | 0 | 4 | 3 | 4 | 3 | 2 | 10 | 2 | 9 | 0 | 0 | 0 | 0 | 0 | 0 | 0 | 0 |
| | Crosswalk (A-B-C) | 3 | 8 | 0 | 0 | 9 | 10 | 2 | 0 | 8 | 7 | 7 | 0 | 0 | 0 | 1 | 0 | 0 | 0 | 6 | 0 |
| | Crosswalk (C-D-A) | 31 | 19 | 0 | 4 | 59 | 47 | 3 | 4 | 46 | 43 | 0 | 3 | 0 | 0 | 10 | 16 | 67 | 55 | 15 | 15 |
| ***Rt 9A & West 39th St*** | Sidewalk A | 0 | 0 | 0 | 0 | 0 | 0 | 0 | 0 | 0 | 0 | 0 | 0 | | | | | | | | |
| | Sidewalk B | 0 | 0 | 0 | 0 | 8 | 4 | 0 | 0 | 3 | 0 | 0 | 0 | | | | | | | | |
| | Sidewalk C | 14 | 13 | 1 | 2 | 41 | 45 | 10 | 4 | 25 | 35 | 4 | 0 | | | | | | | | |
| | Sidewalk D | 0 | 0 | 0 | 0 | 0 | 12 | 0 | 0 | 0 | 2 | 0 | 0 | | | | | | | | |
| | Corner A & B | 1 | 2 | 0 | 0 | 0 | 0 | 0 | 0 | 0 | 0 | 0 | 0 | | | | | | | | |
| | Corner C & D | 0 | 0 | 0 | 0 | 0 | 0 | 0 | 0 | 0 | 2 | 0 | 0 | | | | | | | | |
| | Crosswalk (A-B-C) | 2 | 0 | 0 | 0 | 0 | 0 | 7 | 3 | 0 | 0 | 3 | 0 | | | | | | | | |
| | Crosswalk (C-D-A) | 23 | 20 | 36 | 47 | 32 | 32 | 32 | 17 | 25 | 35 | 44 | 31 | | | | | | | | |
| ***Rt 9A & West 40th St*** | Sidewalk A | 0 | 0 | 0 | 0 | 0 | 1 | 1 | 0 | 1 | 3 | 0 | 0 | | | | | | | | |
| | Sidewalk B | 0 | 0 | 0 | 0 | 3 | 0 | 0 | 2 | 2 | 3 | 1 | 2 | | | | | | | | |
| | Sidewalk C | 0 | 0 | 0 | 0 | 0 | 1 | 2 | 0 | 0 | 0 | 1 | 0 | | | | | | | | |
| | Sidewalk D | 0 | 0 | 0 | 0 | 0 | 0 | 0 | 0 | 0 | 0 | 0 | 0 | | | | | | | | |
| | Corner A & B | 0 | 0 | 0 | 0 | 0 | 0 | 0 | 1 | 0 | 0 | 0 | 1 | | | | | | | | |
| | Corner C & D | 0 | 0 | 0 | 0 | 1 | 0 | 0 | 0 | 0 | 0 | 0 | 0 | | | | | | | | |
| | Crosswalk (A-B-C) | 0 | 0 | 2 | 0 | 0 | 0 | 1 | 4 | 0 | 0 | 1 | 0 | | | | | | | | |
| | Crosswalk (C-D-A) | 0 | 2 | 28 | 50 | 0 | 1 | 21 | 19 | 1 | 2 | 47 | 39 | | | | | | | | |
| ***Rt 9A & West 42nd St*** | Sidewalk A | 2 | 0 | 3 | 0 | 2 | 7 | 0 | 0 | 30 | 0 | 0 | 0 | | | | | | | | |
| | Sidewalk B | 4 | 11 | 26 | 34 | 9 | 17 | 58 | 68 | 3 | 26 | 60 | 54 | | | | | | | | |
| | Sidewalk C | 33 | 39 | 1 | 4 | 54 | 55 | 7 | 2 | 64 | 50 | 10 | 8 | | | | | | | | |
| | Sidewalk D | 2 | 3 | 0 | 3 | 0 | 0 | 2 | 2 | 0 | 8 | 1 | 0 | | | | | | | | |
| | Corner A & B | 0 | 0 | 4 | 6 | 3 | 0 | 13 | 4 | 25 | 0 | 6 | 0 | | | | | | | | |
| | Corner C & D | 4 | 0 | 0 | 0 | 0 | 1 | 0 | 0 | 2 | 4 | 0 | 0 | | | | | | | | |
| | Crosswalk (A-B-C) | 24 | 30 | 2 | 9 | 50 | 63 | 9 | 5 | 57 | 53 | 2 | 24 | | | | | | | | |
| | Crosswalk (C-D-A) | 28 | 33 | 35 | 49 | 49 | 51 | 38 | 38 | 38 | 48 | 16 | 17 | | | | | | | | |
| ***Eleventh Ave & West 29th*** | Sidewalk A | 0 | 0 | 3 | 2 | 2 | 1 | 18 | 24 | 0 | 4 | 9 | 14 | | | | | | | | |
| | Sidewalk B | 15 | 7 | 2 | 5 | 31 | 90 | 11 | 6 | 7 | 41 | 6 | 1 | | | | | | | | |
| | Sidewalk C | 4 | 8 | 19 | 11 | 12 | 3 | 41 | 77 | 9 | 2 | 11 | 36 | | | | | | | | |
| | Sidewalk D | 2 | 1 | 0 | 0 | 22 | 22 | 0 | 0 | 6 | 13 | 6 | 2 | | | | | | | | |
| | Corner A & B | 0 | 0 | 0 | 0 | 0 | 0 | 2 | 1 | 0 | 1 | 0 | 0 | | | | | | | | |
| | Corner C & D | 0 | 4 | 0 | 0 | 3 | 4 | 0 | 0 | 2 | 3 | 1 | 0 | | | | | | | | |
| | Crosswalk (A-B-C) | 1 | 2 | 13 | 6 | 0 | 1 | 32 | 81 | 0 | 0 | 7 | 37 | | | | | | | | |
| | Crosswalk (C-D-A) | 0 | 0 | 3 | 3 | 2 | 1 | 20 | 25 | 2 | 0 | 9 | 12 | | | | | | | | |
| ***Eleventh Ave & West 30th*** | Sidewalk A | 2 | 0 | 2 | 2 | 11 | 6 | 14 | 22 | 2 | 7 | 9 | 9 | 0 | 0 | 0 | 1 | 0 | 0 | 5 | 5 |
| | Sidewalk B | 16 | 8 | 9 | 4 | 19 | 86 | 74 | 93 | 9 | 48 | 13 | 17 | 8 | 9 | 6 | 2 | 35 | 38 | 23 | 23 |
| | Sidewalk C | 4 | 2 | 19 | 8 | 9 | 1 | 46 | 110 | 7 | 0 | 24 | 47 | 3 | 1 | 4 | 6 | 4 | 6 | 38 | 44 |
| | Sidewalk D | 3 | 5 | 1 | 0 | 30 | 34 | 3 | 2 | 11 | 15 | 6 | 0 | 1 | 1 | 0 | 1 | 9 | 11 | 2 | 0 |
| | Corner A & B | 0 | 6 | 1 | 4 | 19 | 16 | 24 | 18 | 4 | 15 | 4 | 11 | 0 | 0 | 3 | 0 | 0 | 0 | 3 | 3 |
| | Corner C & D | 0 | 3 | 0 | 4 | 16 | 10 | 16 | 10 | 2 | 9 | 2 | 9 | 0 | 0 | 0 | 0 | 2 | 0 | 0 | 0 |
| | Crosswalk (A-B-C) | 5 | 2 | 5 | 2 | 35 | 46 | 44 | 48 | 6 | 7 | 16 | 11 | 1 | 1 | 2 | 2 | 11 | 10 | 12 | 13 |
| | Crosswalk (C-D-A) | 0 | 0 | 5 | 2 | 2 | 1 | 27 | 43 | 0 | 0 | 11 | 8 | 2 | 1 | 1 | 2 | 2 | 1 | 9 | 10 |
| ***Eleventh Ave & West 33rd*** | Sidewalk A | 0 | 1 | 1 | 9 | 2 | 0 | 6 | 5 | 0 | 0 | 2 | 4 | 0 | 0 | 1 | 2 | 0 | 1 | 1 | 3 |
| | Sidewalk B | 15 | 15 | 10 | 5 | 113 | 125 | 81 | 107 | 27 | 43 | 18 | 27 | 19 | 6 | 4 | 14 | 43 | 46 | 26 | 27 |
| | Sidewalk C | 2 | 0 | 10 | 6 | 0 | 2 | 8 | 47 | 2 | 1 | 9 | 25 | 2 | 0 | 2 | 6 | 2 | 0 | 20 | 20 |
| | Sidewalk D | 2 | 4 | 1 | 4 | 4 | 5 | 0 | 0 | 1 | 4 | 1 | 0 | 3 | 3 | 0 | 1 | 1 | 2 | 0 | 2 |
| | Corner A & B | 0 | 0 | 5 | 11 | 1 | 0 | 97 | 82 | 0 | 0 | 21 | 19 | 0 | 0 | 4 | 10 | 0 | 0 | 26 | 25 |
| | Corner C & D | 0 | 0 | 0 | 0 | 1 | 0 | 0 | 0 | 0 | 1 | 0 | 0 | 0 | 0 | 1 | 0 | 0 | 2 | 0 | 0 |
| | Crosswalk (A-B-C) | 0 | 0 | 10 | 6 | 1 | 2 | 7 | 46 | 0 | 0 | 7 | 25 | 0 | 0 | 2 | 5 | 0 | 1 | 19 | 20 |
| | Crosswalk (C-D-A) | 2 | 0 | 2 | 9 | 0 | 2 | 3 | 5 | 1 | 1 | 2 | 4 | 0 | 0 | 1 | 1 | 1 | 1 | 2 | 3 |
| ***Eleventh Ave & West 34th*** | Sidewalk A | 7 | 20 | 2 | 3 | 15 | 31 | 3 | 8 | 12 | 14 | 3 | 3 | 12 | 6 | 2 | 1 | 10 | 6 | 10 | 18 |
| | Sidewalk B | 9 | 10 | 25 | 14 | 98 | 92 | 72 | 60 | 23 | 27 | 42 | 39 | 6 | 10 | 2 | 5 | 32 | 36 | 57 | 70 |
| | Sidewalk C | 12 | 11 | 26 | 17 | 35 | 41 | 94 | 110 | 30 | 32 | 24 | 36 | 43 | 1 | 28 | 4 | 41 | 38 | 38 | 42 |
| | Sidewalk D | 0 | 0 | 32 | 21 | 7 | 8 | 72 | 50 | 7 | 2 | 51 | 49 | 2 | 1 | 2 | 3 | 3 | 3 | 67 | 55 |
| | Corner A & B | 1 | 2 | 1 | 1 | 0 | 2 | 9 | 10 | 0 | 0 | 4 | 4 | 2 | 0 | 1 | 0 | 1 | 0 | 5 | 6 |
| | Corner C & D | 2 | 1 | 0 | 0 | 1 | 9 | 1 | 1 | 0 | 8 | 1 | 0 | 1 | 27 | 3 | 2 | 5 | 4 | 0 | 0 |
| | Crosswalk (A-B-C) | 17 | 11 | 22 | 20 | 43 | 43 | 96 | 103 | 32 | 30 | 20 | 30 | 3 | 6 | 4 | 10 | 61 | 39 | 41 | 36 |
| | Crosswalk (C-D-A) | 14 | 16 | 11 | 10 | 38 | 29 | 28 | 30 | 27 | 26 | 21 | 23 | 9 | 1 | 0 | 7 | 42 | 33 | 36 | 31 |
| ***Eleventh Ave & West 35th*** | Sidewalk A | 0 | 0 | 4 | 3 | 0 | 0 | 6 | 9 | 0 | 0 | 7 | 7 | | | | | | | | |
| | Sidewalk B | 8 | 9 | 0 | 0 | 85 | 73 | 1 | 0 | 17 | 16 | 2 | 0 | | | | | | | | |
| | Sidewalk C | 2 | 0 | 4 | 8 | 1 | 9 | 85 | 73 | 0 | 0 | 18 | 13 | | | | | | | | |
| | Sidewalk D | 4 | 3 | 0 | 0 | 6 | 6 | 0 | 0 | 5 | 4 | 0 | 0 | | | | | | | | |
| | Corner A & B | 0 | 0 | 0 | 1 | 0 | 0 | 0 | 1 | 0 | 0 | 2 | 0 | | | | | | | | |
| | Corner C & D | 0 | 1 | 0 | 0 | 0 | 0 | 0 | 0 | 0 | 0 | 0 | 0 | | | | | | | | |
| | Crosswalk (A-B-C) | 0 | 1 | 6 | 9 | 1 | 6 | 85 | 73 | 1 | 2 | 18 | 15 | | | | | | | | |
| | Crosswalk (C-D-A) | 0 | 0 | 4 | 3 | 2 | 2 | 6 | 8 | 0 | 1 | 5 | 7 | | | | | | | | |
| ***Eleventh Ave & West 36th*** | Sidewalk A | 0 | 0 | 4 | 2 | 0 | 0 | 1 | 11 | 0 | 0 | 4 | 6 | | | | | | | | |
| | Sidewalk B | 4 | 9 | 0 | 0 | 77 | 66 | 1 | 1 | 15 | 18 | 1 | 0 | | | | | | | | |
| | Sidewalk C | 4 | 1 | 4 | 8 | 2 | 2 | 75 | 65 | 3 | 1 | 15 | 16 | | | | | | | | |
| | Sidewalk D | 6 | 4 | 0 | 0 | 3 | 8 | 0 | 0 | 8 | 6 | 0 | 0 | | | | | | | | |
| | Corner A & B | 0 | 0 | 1 | 0 | 0 | 0 | 1 | 0 | 0 | 0 | 1 | 0 | | | | | | | | |
| | Corner C & D | 0 | 0 | 0 | 0 | 0 | 0 | 0 | 0 | 1 | 0 | 0 | 0 | | | | | | | | |
| | Crosswalk (A-B-C) | 0 | 1 | 4 | 8 | 0 | 1 | 75 | 63 | 0 | 0 | 16 | 15 | | | | | | | | |
| | Crosswalk (C-D-A) | 3 | 2 | 0 | 0 | 3 | 2 | 2 | 12 | 3 | 0 | 5 | 6 | | | | | | | | |

# Appendix S.5.2

**PEDESTRIAN VOLUMES (SIDEWALKS, CORNERS, AND CROSSWALKS)**
**2025 FUTURE WITHOUT THE PROPOSED ACTION**

| Intersection | Elements | Weekday AM Peak 15-Min. | | | | Weekday MD Peak 15-Min. | | | | Weekday PM Peak 15-Min. | | | | Special Events Evening Peak 15-Min. | | | | Special Events Sunday Peak 15-Min. | | | |
|---|---|---|---|---|---|---|---|---|---|---|---|---|---|---|---|---|---|---|---|---|---|
| *Eleventh Ave & West 37th* | Sidewalk A | 2 | 2 | 0 | 1 | 1 | 1 | 0 | 0 | 0 | 0 | 0 | 3 | | | | | | | | |
| | Sidewalk B | 3 | 7 | 0 | 0 | 65 | 70 | 3 | 6 | 20 | 19 | 0 | 0 | | | | | | | | |
| | Sidewalk C | 1 | 0 | 3 | 7 | 2 | 4 | 63 | 53 | 0 | 1 | 13 | 10 | | | | | | | | |
| | Sidewalk D | 0 | 0 | 0 | 0 | 4 | 3 | 0 | 3 | 0 | 8 | 1 | 3 | | | | | | | | |
| | Corner A & B | 0 | 1 | 0 | 0 | 0 | 0 | 0 | 1 | 0 | 0 | 4 | 2 | | | | | | | | |
| | Corner C & D | 0 | 1 | 0 | 0 | 1 | 0 | 0 | 0 | 1 | 0 | 0 | 0 | | | | | | | | |
| | Crosswalk (A-B-C) | 0 | 2 | 4 | 7 | 2 | 0 | 63 | 61 | 2 | 1 | 14 | 11 | | | | | | | | |
| | Crosswalk (C-D-A) | 0 | 0 | 1 | 3 | 7 | 10 | 0 | 0 | 0 | 0 | 0 | 0 | | | | | | | | |
| *Eleventh Ave & West 38th* | Sidewalk A | 0 | 0 | 1 | 2 | 1 | 2 | 1 | 0 | 0 | 0 | 1 | 0 | | | | | | | | |
| | Sidewalk B | 0 | 1 | 2 | 2 | 4 | 4 | 0 | 1 | 1 | 1 | 0 | 0 | | | | | | | | |
| | Sidewalk C | 0 | 1 | 3 | 5 | 0 | 6 | 52 | 44 | 0 | 2 | 11 | 8 | | | | | | | | |
| | Sidewalk D | 0 | 0 | 4 | 0 | 0 | 0 | 3 | 2 | 0 | 0 | 12 | 1 | | | | | | | | |
| | Corner A & B | 0 | 0 | 0 | 0 | 0 | 0 | 0 | 0 | 0 | 0 | 0 | 0 | | | | | | | | |
| | Corner C & D | 0 | 0 | 0 | 0 | 0 | 0 | 0 | 0 | 0 | 0 | 0 | 0 | | | | | | | | |
| | Crosswalk (A-B-C) | 0 | 0 | 0 | 1 | 15 | 2 | 11 | 7 | 0 | 0 | 1 | 1 | | | | | | | | |
| | Crosswalk (C-D-A) | 0 | 0 | 0 | 2 | 1 | 0 | 4 | 2 | 0 | 9 | 0 | 0 | | | | | | | | |
| *Eleventh Ave & West 39th* | Sidewalk A | 0 | 1 | 2 | 84 | 6 | 8 | 7 | 2 | 2 | 2 | 2 | 2 | 1 | 0 | 0 | 0 | 0 | 0 | 1 | 7 |
| | Sidewalk B | 1 | 2 | 0 | 0 | 0 | 0 | 1 | 21 | 3 | 1 | 0 | 1 | 0 | 0 | 6 | 0 | 0 | 1 | 4 | 0 |
| | Sidewalk C | 14 | 18 | 6 | 4 | 30 | 31 | 3 | 3 | 23 | 29 | 1 | 1 | 3 | 4 | 1 | 0 | 57 | 41 | 2 | 2 |
| | Sidewalk D | 1 | 44 | 15 | 12 | 8 | 0 | 30 | 30 | 1 | 1 | 24 | 29 | 0 | 0 | 1 | 0 | 15 | 7 | 48 | 37 |
| | Corner A & B | 0 | 1 | 0 | 1 | 0 | 0 | 0 | 0 | 6 | 0 | 6 | 0 | 9 | 4 | 0 | 3 | 0 | 0 | 0 | 0 |
| | Corner C & D | 0 | 1 | 0 | 1 | 0 | 0 | 0 | 0 | 4 | 0 | 2 | 0 | 0 | 4 | 0 | 0 | 2 | 0 | 0 | 0 |
| | Crosswalk (A-B-C) | 0 | 1 | 4 | 0 | 16 | 6 | 3 | 0 | 0 | 0 | 2 | 1 | 0 | 0 | 0 | 0 | 11 | 0 | 2 | 1 |
| | Crosswalk (C-D-A) | 14 | 12 | 3 | 81 | 30 | 32 | 7 | 3 | 23 | 28 | 4 | 0 | 0 | 9 | 9 | 4 | 63 | 38 | 13 | 8 |
| *Eleventh Ave & West 40th* | Sidewalk A | 4 | 8 | 13 | 17 | 3 | 0 | 2 | 1 | 6 | 0 | 71 | 11 | | | | | | | | |
| | Sidewalk B | 4 | 1 | 1 | 2 | 1 | 2 | 3 | 2 | 23 | 0 | 0 | 0 | | | | | | | | |
| | Sidewalk C | 0 | 1 | 0 | 0 | 0 | 1 | 2 | 3 | 1 | 7 | 11 | 7 | | | | | | | | |
| | Sidewalk D | 8 | 9 | 0 | 1 | 13 | 18 | 4 | 4 | 109 | 2 | 1 | 0 | | | | | | | | |
| | Corner A & B | 9 | 12 | 8 | 7 | 0 | 7 | 0 | 3 | 0 | 0 | 0 | 0 | | | | | | | | |
| | Corner C & D | 7 | 7 | 7 | 7 | 0 | 3 | 0 | 3 | 0 | 0 | 0 | 0 | | | | | | | | |
| | Crosswalk (A-B-C) | 0 | 1 | 1 | 0 | 3 | 0 | 0 | 6 | 0 | 0 | 0 | 0 | | | | | | | | |
| | Crosswalk (C-D-A) | 0 | 0 | 11 | 7 | 0 | 6 | 9 | 3 | 9 | 11 | 19 | 0 | | | | | | | | |
| *Eleventh Ave & West 42nd* | Sidewalk A | 100 | 29 | 2 | 43 | 125 | 82 | 3 | 21 | 129 | 75 | 5 | 61 | 79 | 7 | 1 | 25 | 148 | 82 | 18 | 23 |
| | Sidewalk B | 12 | 17 | 121 | 27 | 4 | 3 | 135 | 90 | 0 | 14 | 172 | 80 | 0 | 19 | 101 | 8 | 23 | 10 | 162 | 107 |
| | Sidewalk C | 79 | 29 | 1 | 9 | 82 | 64 | 15 | 4 | 78 | 74 | 1 | 0 | 26 | 17 | 4 | 4 | 105 | 90 | 8 | 1 |
| | Sidewalk D | 59 | 28 | 48 | 22 | 44 | 30 | 68 | 60 | 48 | 39 | 57 | 60 | 34 | 27 | 15 | 6 | 53 | 34 | 99 | 86 |
| | Corner A & B | 0 | 0 | 0 | 0 | 0 | 0 | 0 | 0 | 0 | 0 | 0 | 0 | 0 | 6 | 10 | 0 | 2 | 0 | 6 | 11 |
| | Corner C & D | 3 | 0 | 0 | 0 | 2 | 6 | 4 | 1 | 1 | 1 | 7 | 0 | 2 | 2 | 0 | 0 | 2 | 3 | 0 | 1 |
| | Crosswalk (A-B-C) | 109 | 30 | 25 | 35 | 133 | 88 | 34 | 13 | 151 | 78 | 19 | 24 | 87 | 10 | 18 | 27 | 156 | 90 | 25 | 19 |
| | Crosswalk (C-D-A) | 86 | 23 | 59 | 41 | 89 | 61 | 24 | 35 | 89 | 73 | 32 | 49 | 41 | 19 | 16 | 29 | 119 | 88 | 38 | 33 |
| *Tenth Ave & W. 29th St* | Sidewalk A | 11 | 9 | 39 | 20 | 21 | 40 | 33 | 110 | 6 | 23 | 10 | 77 | | | | | | | | |
| | Sidewalk B | 18 | 12 | 21 | 14 | 18 | 71 | 10 | 68 | 12 | 46 | 6 | 55 | | | | | | | | |
| | Sidewalk C | 18 | 13 | 17 | 8 | 34 | 54 | 28 | 72 | 10 | 36 | 6 | 47 | | | | | | | | |
| | Sidewalk D | 68 | 26 | 20 | 15 | 32 | 174 | 11 | 49 | 12 | 135 | 11 | 43 | | | | | | | | |
| | Corner A & B | 3 | 4 | 1 | 2 | 4 | 8 | 1 | 2 | 7 | 8 | 3 | 2 | | | | | | | | |
| | Corner C & D | 1 | 2 | 6 | 7 | 3 | 1 | 2 | 6 | 6 | 1 | 8 | 4 | | | | | | | | |
| | Crosswalk (A-B-C) | 21 | 14 | 21 | 16 | 11 | 64 | 25 | 97 | 3 | 53 | 10 | 45 | | | | | | | | |
| | Crosswalk (C-D-A) | 38 | 15 | 52 | 19 | 9 | 103 | 28 | 140 | 6 | 77 | 17 | 100 | | | | | | | | |
| *Tenth Ave & W. 30th St* | Sidewalk A | 11 | 5 | 33 | 16 | 83 | 105 | 56 | 118 | 17 | 26 | 14 | 69 | 2 | 3 | 11 | 14 | 27 | 26 | 42 | 44 |
| | Sidewalk B | 25 | 10 | 13 | 8 | 42 | 112 | 65 | 105 | 9 | 61 | 15 | 36 | 9 | 12 | 3 | 3 | 41 | 44 | 38 | 36 |
| | Sidewalk C | 11 | 13 | 25 | 17 | 14 | 45 | 34 | 80 | 11 | 27 | 8 | 48 | 7 | 6 | 7 | 14 | 19 | 23 | 32 | 33 |
| | Sidewalk D | 45 | 20 | 13 | 6 | 37 | 142 | 16 | 43 | 12 | 94 | 10 | 31 | 14 | 22 | 9 | 7 | 61 | 65 | 19 | 26 |
| | Corner A & B | 3 | 1 | 0 | 0 | 20 | 21 | 1 | 0 | 2 | 4 | 1 | 0 | 0 | 0 | 0 | 0 | 1 | 1 | 0 | 0 |
| | Corner C & D | 0 | 0 | 1 | 0 | 0 | 0 | 0 | 3 | 0 | 0 | 1 | 0 | 2 | 0 | 1 | 1 | 0 | 1 | 0 | 0 |
| | Crosswalk (A-B-C) | 18 | 11 | 26 | 16 | 64 | 124 | 33 | 84 | 15 | 51 | 5 | 47 | 4 | 7 | 7 | 11 | 47 | 46 | 32 | 34 |
| | Crosswalk (C-D-A) | 14 | 12 | 41 | 18 | 9 | 49 | 36 | 136 | 11 | 32 | 15 | 90 | 6 | 7 | 14 | 18 | 20 | 24 | 60 | 65 |
| *Tenth Ave & W. 31st St* | Sidewalk A | 0 | 0 | 34 | 9 | 0 | 0 | 6 | 64 | 0 | 0 | 17 | 67 | 0 | 0 | 11 | 12 | 0 | 0 | 36 | 37 |
| | Sidewalk B | 32 | 18 | 18 | 14 | 24 | 81 | 118 | 131 | 11 | 51 | 20 | 33 | 5 | 11 | 3 | 3 | 25 | 28 | 31 | 32 |
| | Sidewalk C | 8 | 5 | 33 | 17 | 9 | 12 | 37 | 123 | 10 | 9 | 15 | 72 | 3 | 5 | 8 | 14 | 7 | 7 | 44 | 46 |
| | Sidewalk D | 39 | 10 | 0 | 0 | 61 | 118 | 0 | 0 | 22 | 75 | 0 | 0 | 9 | 13 | 0 | 0 | 33 | 40 | 0 | 0 |
| | Corner A & B | 0 | 0 | 4 | 8 | 0 | 0 | 23 | 15 | 0 | 0 | 2 | 8 | 0 | 0 | 0 | 0 | 0 | 0 | 2 | 3 |
| | Corner C & D | 2 | 3 | 0 | 0 | 2 | 10 | 0 | 0 | 3 | 12 | 0 | 0 | 2 | 2 | 0 | 0 | 4 | 5 | 0 | 0 |
| | Crosswalk (A-B-C) | 6 | 2 | 31 | 16 | 58 | 63 | 37 | 113 | 6 | 9 | 9 | 63 | 1 | 4 | 6 | 10 | 10 | 10 | 38 | 42 |
| | Crosswalk (C-D-A) | 2 | 0 | 8 | 1 | 6 | 0 | 6 | 8 | 1 | 0 | 16 | 16 | 2 | 2 | 3 | 4 | 0 | 0 | 3 | 3 |
| *Tenth Ave & W. 33rd St* | Sidewalk A | 13 | 19 | 24 | 42 | 191 | 180 | 58 | 79 | 32 | 32 | 13 | 39 | 4 | 9 | 15 | 3 | 37 | 36 | 34 | 33 |
| | Sidewalk B | 23 | 24 | 24 | 19 | 66 | 83 | 96 | 117 | 28 | 32 | 26 | 30 | 12 | 12 | 4 | 7 | 25 | 33 | 36 | 37 |
| | Sidewalk C | 50 | 23 | 22 | 13 | 188 | 252 | 7 | 52 | 45 | 93 | 23 | 36 | 14 | 30 | 10 | 9 | 69 | 81 | 22 | 32 |
| | Sidewalk D | 29 | 17 | 29 | 13 | 11 | 66 | 97 | 121 | 9 | 56 | 22 | 31 | 22 | 11 | 2 | 4 | 34 | 41 | 27 | 33 |
| | Corner A & B | 0 | 2 | 1 | 3 | 12 | 12 | 13 | 4 | 6 | 2 | 3 | 6 | 0 | 0 | 0 | 0 | 0 | 2 | 2 | 2 |
| | Corner C & D | 3 | 8 | 2 | 0 | 4 | 10 | 9 | 2 | 6 | 10 | 1 | 1 | 2 | 2 | 1 | 0 | 10 | 5 | 0 | 0 |
| | Crosswalk (A-B-C) | 21 | 24 | 25 | 19 | 143 | 158 | 91 | 102 | 20 | 28 | 24 | 37 | 4 | 14 | 20 | 7 | 28 | 30 | 24 | 27 |
| | Crosswalk (C-D-A) | 41 | 22 | 23 | 12 | 150 | 181 | 71 | 140 | 29 | 77 | 27 | 42 | 9 | 15 | 5 | 5 | 48 | 55 | 37 | 39 |
| *Tenth Ave & W. 34th St* | Sidewalk A | 34 | 97 | 17 | 17 | 113 | 105 | 71 | 83 | 84 | 39 | 18 | 44 | 18 | 24 | 8 | 13 | 58 | 56 | 24 | 22 |
| | Sidewalk B | 14 | 24 | 24 | 93 | 59 | 66 | 119 | 127 | 26 | 24 | 84 | 52 | 12 | 26 | 24 | 29 | 18 | 21 | 76 | 74 |
| | Sidewalk C | 41 | 124 | 36 | 25 | 99 | 93 | 97 | 106 | 105 | 71 | 37 | 49 | 50 | 27 | 15 | 13 | 46 | 47 | 31 | 31 |
| | Sidewalk D | 14 | 17 | 19 | 77 | 60 | 75 | 77 | 56 | 16 | 22 | 100 | 42 | 10 | 14 | 38 | 18 | 19 | 22 | 40 | 33 |
| | Corner A & B | 7 | 3 | 2 | 9 | 3 | 4 | 6 | 6 | 8 | 2 | 14 | 8 | 1 | 10 | 4 | 6 | 1 | 0 | 4 | 3 |
| | Corner C & D | 15 | 12 | 3 | 2 | 37 | 40 | 4 | 9 | 15 | 41 | 7 | 10 | 5 | 7 | 1 | 1 | 6 | 8 | 0 | 2 |
| | Crosswalk (A-B-C) | 22 | 97 | 19 | 22 | 125 | 115 | 61 | 73 | 88 | 47 | 30 | 29 | 14 | 17 | 13 | 20 | 65 | 63 | 27 | 22 |
| | Crosswalk (C-D-A) | 21 | 76 | 17 | 18 | 72 | 68 | 71 | 78 | 97 | 36 | 26 | 34 | 37 | 27 | 5 | 8 | 42 | 35 | 20 | 23 |
| *Tenth Ave & W. 35th St* | Sidewalk A | 2 | 33 | 9 | 9 | 50 | 34 | 41 | 51 | 43 | 4 | 10 | 33 | | | | | | | | |
| | Sidewalk B | 4 | 6 | 2 | 48 | 47 | 47 | 38 | 40 | 35 | 41 | 57 | 11 | | | | | | | | |
| | Sidewalk C | 4 | 20 | 2 | 3 | 1 | 0 | 54 | 40 | 1 | 0 | 32 | 24 | | | | | | | | |
| | Sidewalk D | 19 | 9 | 6 | 26 | 45 | 39 | 19 | 18 | 16 | 27 | 12 | 11 | | | | | | | | |
| | Corner A & B | 0 | 0 | 1 | 0 | 17 | 10 | 4 | 1 | 0 | 1 | 11 | 4 | | | | | | | | |
| | Corner C & D | 0 | 0 | 7 | 0 | 0 | 0 | 10 | 12 | 0 | 0 | 2 | 3 | | | | | | | | |
| | Crosswalk (A-B-C) | 2 | 63 | 5 | 3 | 44 | 42 | 49 | 42 | 53 | 10 | 26 | 22 | | | | | | | | |
| | Crosswalk (C-D-A) | 7 | 22 | 9 | 11 | 13 | 21 | 51 | 65 | 23 | 12 | 16 | 44 | | | | | | | | |

# Appendix S.5.2

**PEDESTRIAN VOLUMES (SIDEWALKS, CORNERS, AND CROSSWALKS)**
**2025 FUTURE WITHOUT THE PROPOSED ACTION**

| Intersection | Elements | Weekday AM Peak 15-Min. | | | | Weekday MD Peak 15-Min. | | | | Weekday PM Peak 15-Min. | | | | Special Events Evening Peak 15-Min. | | | | Special Events Sunday Peak 15-Min. | | | |
|---|---|---|---|---|---|---|---|---|---|---|---|---|---|---|---|---|---|---|---|---|---|
| ***Tenth Ave & W. 36th St*** | Sidewalk A | 3 | 13 | 8 | 4 | 29 | 32 | 38 | 44 | 3 | 4 | 17 | 21 | | | | | | | | |
| | Sidewalk B | 12 | 4 | 3 | 13 | 29 | 38 | 29 | 23 | 21 | 19 | 14 | 6 | | | | | | | | |
| | Sidewalk C | 0 | 19 | 15 | 4 | 18 | 23 | 32 | 32 | 26 | 9 | 23 | 22 | | | | | | | | |
| | Sidewalk D | 8 | 5 | 0 | 13 | 40 | 35 | 9 | 18 | 17 | 24 | 22 | 3 | | | | | | | | |
| | Corner A & B | 0 | 0 | 0 | 0 | 2 | 9 | 8 | 0 | 0 | 0 | 1 | 1 | | | | | | | | |
| | Corner C & D | 0 | 0 | 0 | 0 | 1 | 2 | 3 | 0 | 1 | 0 | 0 | 3 | | | | | | | | |
| | Crosswalk (A-B-C) | 2 | 14 | 87 | 30 | 35 | 32 | 33 | 23 | 25 | 7 | 22 | 24 | | | | | | | | |
| | Crosswalk (C-D-A) | 15 | 61 | 44 | 34 | 15 | 20 | 38 | 42 | 92 | 1 | 20 | 51 | | | | | | | | |
| ***Tenth Ave & W. 37th St*** | Sidewalk A | 11 | 5 | 8 | 4 | 30 | 32 | 24 | 31 | 6 | 15 | 14 | 10 | | | | | | | | |
| | Sidewalk B | 21 | 10 | 7 | 18 | 44 | 34 | 21 | 25 | 22 | 13 | 17 | 5 | | | | | | | | |
| | Sidewalk C | 13 | 22 | 10 | 12 | 15 | 23 | 21 | 28 | 11 | 8 | 19 | 16 | | | | | | | | |
| | Sidewalk D | 2 | 5 | 9 | 9 | 27 | 29 | 8 | 6 | 8 | 13 | 6 | 10 | | | | | | | | |
| | Corner A & B | 1 | 1 | 3 | 3 | 2 | 2 | 6 | 3 | 6 | 2 | 7 | 11 | | | | | | | | |
| | Corner C & D | 10 | 9 | 3 | 1 | 9 | 6 | 2 | 2 | 0 | 1 | 3 | 4 | | | | | | | | |
| | Crosswalk (A-B-C) | 11 | 19 | 11 | 33 | 27 | 29 | 33 | 33 | 20 | 12 | 12 | 14 | | | | | | | | |
| | Crosswalk (C-D-A) | 6 | 3 | 16 | 13 | 15 | 12 | 30 | 36 | 8 | 15 | 7 | 14 | | | | | | | | |
| ***Tenth Ave & W. 38th St*** | Sidewalk A | 8 | 7 | 9 | 13 | 11 | 9 | 19 | 29 | 28 | 8 | 10 | 14 | | | | | | | | |
| | Sidewalk B | 9 | 13 | 4 | 12 | 33 | 28 | 21 | 25 | 11 | 15 | 12 | 9 | | | | | | | | |
| | Sidewalk C | 1 | 3 | 6 | 5 | 7 | 12 | 22 | 26 | 10 | 8 | 18 | 11 | | | | | | | | |
| | Sidewalk D | 10 | 7 | 2 | 3 | 23 | 25 | 11 | 10 | 16 | 6 | 12 | 4 | | | | | | | | |
| | Corner A & B | 0 | 2 | 0 | 3 | 1 | 6 | 6 | 7 | 1 | 1 | 0 | 1 | | | | | | | | |
| | Corner C & D | 0 | 0 | 1 | 0 | 3 | 4 | 2 | 3 | 0 | 1 | 2 | 2 | | | | | | | | |
| | Crosswalk (A-B-C) | 6 | 3 | 2 | 10 | 16 | 21 | 25 | 26 | 12 | 5 | 18 | 13 | | | | | | | | |
| | Crosswalk (C-D-A) | 0 | 3 | 3 | 12 | 10 | 13 | 23 | 22 | 15 | 4 | 14 | 11 | | | | | | | | |
| ***Tenth Ave & W. 39th St*** | Sidewalk A | 8 | 7 | 5 | 6 | 23 | 23 | 23 | 28 | 14 | 16 | 7 | 10 | | | | | | | | |
| | Sidewalk B | 9 | 11 | 8 | 7 | 27 | 34 | 23 | 23 | 13 | 14 | 14 | 18 | | | | | | | | |
| | Sidewalk C | 8 | 16 | 14 | 14 | 25 | 18 | 28 | 31 | 25 | 15 | 26 | 10 | | | | | | | | |
| | Sidewalk D | 5 | 9 | 7 | 8 | 30 | 29 | 22 | 19 | 9 | 10 | 19 | 18 | | | | | | | | |
| | Corner A & B | 0 | 0 | 0 | 0 | 0 | 0 | 1 | 0 | 0 | 0 | 0 | 0 | | | | | | | | |
| | Corner C & D | 8 | 0 | 0 | 0 | 1 | 1 | 2 | 0 | 0 | 2 | 1 | 0 | | | | | | | | |
| | Crosswalk (A-B-C) | 8 | 7 | 14 | 8 | 23 | 23 | 28 | 34 | 14 | 17 | 22 | 11 | | | | | | | | |
| | Crosswalk (C-D-A) | 7 | 13 | 5 | 6 | 19 | 19 | 23 | 28 | 27 | 18 | 16 | 15 | | | | | | | | |
| ***Tenth Ave & W. 40th St*** | Sidewalk A | 5 | 3 | 2 | 5 | 20 | 10 | 23 | 21 | 6 | 10 | 22 | 13 | | | | | | | | |
| | Sidewalk B | 14 | 27 | 5 | 9 | 23 | 28 | 28 | 35 | 26 | 29 | 18 | 22 | | | | | | | | |
| | Sidewalk C | 4 | 5 | 12 | 26 | 22 | 23 | 32 | 42 | 7 | 5 | 19 | 21 | | | | | | | | |
| | Sidewalk D | 4 | 5 | 2 | 4 | 23 | 26 | 10 | 8 | 24 | 12 | 2 | 2 | | | | | | | | |
| | Corner A & B | 0 | 0 | 1 | 5 | 6 | 3 | 10 | 7 | 0 | 2 | 10 | 11 | | | | | | | | |
| | Corner C & D | 2 | 0 | 1 | 0 | 15 | 17 | 2 | 4 | 1 | 4 | 0 | 0 | | | | | | | | |
| | Crosswalk (A-B-C) | 6 | 5 | 11 | 22 | 26 | 24 | 9 | 13 | 8 | 12 | 16 | 19 | | | | | | | | |
| | Crosswalk (C-D-A) | 2 | 3 | 3 | 5 | 8 | 9 | 23 | 26 | 4 | 2 | 22 | 10 | | | | | | | | |
| ***Tenth Ave & W. 41st St*** | Sidewalk A | 48 | 17 | 20 | 25 | 41 | 19 | 27 | 33 | 44 | 24 | 21 | 18 | | | | | | | | |
| | Sidewalk B | 21 | 43 | 60 | 9 | 52 | 50 | 75 | 47 | 52 | 34 | 48 | 35 | | | | | | | | |
| | Sidewalk C | 4 | 2 | 10 | 22 | 26 | 35 | 36 | 36 | 7 | 20 | 38 | 29 | | | | | | | | |
| | Sidewalk D | 5 | 14 | 0 | 0 | 16 | 19 | 2 | 9 | 25 | 17 | 3 | 9 | | | | | | | | |
| | Corner A & B | 3 | 4 | 3 | 8 | 2 | 7 | 23 | 21 | 3 | 4 | 11 | 4 | | | | | | | | |
| | Corner C & D | 0 | 0 | 0 | 0 | 3 | 1 | 0 | 0 | 8 | 1 | 1 | 2 | | | | | | | | |
| | Crosswalk (A-B-C) | 59 | 11 | 10 | 28 | 56 | 23 | 32 | 27 | 54 | 25 | 40 | 20 | | | | | | | | |
| | Crosswalk (C-D-A) | 2 | 1 | 6 | 16 | 24 | 23 | 32 | 33 | 9 | 9 | 20 | 16 | | | | | | | | |
| ***Tenth Ave & W. 42nd St*** | Sidewalk A | 172 | 75 | 14 | 12 | 199 | 89 | 48 | 54 | 236 | 115 | 26 | 44 | | | | | | | | |
| | Sidewalk B | 24 | 45 | 194 | 95 | 60 | 54 | 197 | 135 | 35 | 74 | 196 | 176 | | | | | | | | |
| | Sidewalk C | 117 | 59 | 24 | 31 | 122 | 111 | 33 | 33 | 142 | 100 | 29 | 36 | | | | | | | | |
| | Sidewalk D | 40 | 20 | 65 | 37 | 37 | 35 | 102 | 87 | 19 | 33 | 97 | 72 | | | | | | | | |
| | Corner A & B | 17 | 11 | 14 | 11 | 15 | 11 | 34 | 22 | 11 | 8 | 27 | 32 | | | | | | | | |
| | Corner C & D | 10 | 3 | 4 | 3 | 0 | 6 | 0 | 0 | 23 | 71 | 1 | 1 | | | | | | | | |
| | Crosswalk (A-B-C) | 180 | 78 | 23 | 39 | 202 | 116 | 37 | 48 | 206 | 145 | 21 | 70 | | | | | | | | |
| | Crosswalk (C-D-A) | 97 | 47 | 20 | 23 | 121 | 105 | 43 | 52 | 109 | 90 | 28 | 32 | | | | | | | | |
| ***Dyer Ave & W. 42nd St*** | Sidewalk A | 89 | 74 | 0 | 0 | 61 | 51 | 0 | 0 | 154 | 87 | 0 | 0 | | | | | | | | |
| | Sidewalk B | 0 | 0 | 112 | 71 | 0 | 0 | 77 | 58 | 0 | 0 | 160 | 131 | | | | | | | | |
| | Sidewalk C | 35 | 55 | 3 | 6 | 47 | 58 | 1 | 2 | 76 | 63 | 12 | 6 | | | | | | | | |
| | Sidewalk D | 1 | 0 | 46 | 32 | 1 | 4 | 47 | 49 | 3 | 1 | 81 | 47 | | | | | | | | |
| | Corner A & B | 0 | 0 | 0 | 0 | 0 | 0 | 0 | 0 | 0 | 0 | 0 | 0 | | | | | | | | |
| | Corner C & D | 3 | 0 | 0 | 0 | 0 | 1 | 0 | 0 | 0 | 4 | 0 | 0 | | | | | | | | |
| | Crosswalk (A-B-C) | 106 | 71 | 4 | 6 | 78 | 59 | 1 | 6 | 158 | 132 | 4 | 8 | | | | | | | | |
| | Crosswalk (C-D-A) | 41 | 40 | 6 | 2 | 48 | 49 | 3 | 2 | 81 | 80 | 10 | 11 | | | | | | | | |
| ***Ninth Ave & W. 30th St*** | Sidewalk A | 21 | 15 | 231 | 27 | 76 | 117 | 178 | 206 | 22 | 38 | 46 | 80 | 9 | 4 | 30 | 11 | 45 | 46 | 135 | 51 |
| | Sidewalk B | 158 | 58 | 28 | 29 | 325 | 361 | 18 | 52 | 96 | 138 | 14 | 45 | 44 | 47 | 8 | 18 | 163 | 131 | 33 | 36 |
| | Sidewalk C | 50 | 28 | 59 | 53 | 39 | 42 | 203 | 215 | 23 | 56 | 68 | 90 | 11 | 13 | 31 | 35 | 87 | 24 | 100 | 80 |
| | Sidewalk D | 77 | 53 | 277 | 31 | 188 | 189 | 65 | 71 | 70 | 66 | 23 | 102 | 24 | 14 | 26 | 15 | 70 | 109 | 147 | 34 |
| | Corner A & B | 8 | 0 | 3 | 14 | 5 | 3 | 11 | 15 | 3 | 4 | 9 | 12 | 6 | 0 | 1 | 6 | 1 | 15 | 9 | 18 |
| | Corner C & D | 17 | 8 | 8 | 22 | 2 | 9 | 12 | 2 | 4 | 6 | 22 | 4 | 2 | 3 | 4 | 4 | 0 | 19 | 19 | 56 |
| | Crosswalk (A-B-C) | 68 | 26 | 92 | 38 | 86 | 129 | 209 | 256 | 27 | 43 | 73 | 115 | 9 | 15 | 24 | 37 | 66 | 47 | 97 | 82 |
| | Crosswalk (C-D-A) | 94 | 14 | 244 | 40 | 49 | 58 | 182 | 194 | 19 | 62 | 43 | 79 | 12 | 11 | 22 | 11 | 105 | 27 | 95 | 57 |
| ***Ninth Ave & W. 31st St*** | Sidewalk A | 31 | 96 | 128 | 72 | 148 | 162 | 110 | 125 | 98 | 23 | 27 | 121 | 14 | 6 | 10 | 32 | 72 | 47 | 25 | 28 |
| | Sidewalk B | 64 | 42 | 119 | 159 | 24 | 34 | 492 | 607 | 49 | 50 | 262 | 121 | 18 | 26 | 31 | 13 | 125 | 21 | 220 | 242 |
| | Sidewalk C | 95 | 141 | 161 | 54 | 61 | 61 | 263 | 323 | 93 | 39 | 136 | 129 | 17 | 13 | 37 | 39 | 15 | 7 | 113 | 101 |
| | Sidewalk D | 41 | 27 | 37 | 52 | 209 | 232 | 94 | 67 | 47 | 64 | 66 | 6 | 13 | 27 | 6 | 2 | 65 | 60 | 3 | 9 |
| | Corner A & B | 4 | 11 | 6 | 31 | 1 | 0 | 11 | 7 | 42 | 125 | 42 | 125 | 2 | 0 | 0 | 1 | 6 | 1 | 10 | 64 |
| | Corner C & D | 49 | 50 | 4 | 10 | 10 | 2 | 52 | 56 | 36 | 123 | 18 | 74 | 8 | 10 | 0 | 0 | 2 | 3 | 3 | 3 |
| | Crosswalk (A-B-C) | 44 | 135 | 83 | 98 | 235 | 262 | 316 | 390 | 193 | 50 | 92 | 118 | 23 | 5 | 22 | 35 | 105 | 73 | 172 | 120 |
| | Crosswalk (C-D-A) | 64 | 88 | 70 | 27 | 125 | 143 | 163 | 182 | 61 | 26 | 31 | 56 | 10 | 5 | 9 | 26 | 32 | 44 | 35 | 32 |
| ***Ninth Ave & W. 33rd St*** | Sidewalk A | 21 | 100 | 40 | 179 | 105 | 158 | 195 | 234 | 26 | 29 | 198 | 23 | 13 | 9 | 27 | 14 | 34 | 47 | 38 | 35 |
| | Sidewalk B | 82 | 117 | 59 | 230 | 322 | 295 | 168 | 202 | 132 | 106 | 151 | 23 | 52 | 50 | 45 | 12 | 171 | 164 | 73 | 44 |
| | Sidewalk C | 212 | 554 | 45 | 28 | 597 | 656 | 88 | 120 | 429 | 307 | 7 | 55 | 103 | 40 | 29 | 26 | 259 | 213 | 71 | 42 |
| | Sidewalk D | 73 | 222 | 120 | 494 | 210 | 222 | 295 | 304 | 256 | 25 | 292 | 92 | 54 | 9 | 106 | 23 | 60 | 25 | 109 | 92 |
| | Corner A & B | 2 | 30 | 17 | 56 | 2 | 6 | 32 | 59 | 103 | 86 | 137 | 87 | 6 | 0 | 11 | 8 | 4 | 1 | 40 | 39 |
| | Corner C & D | 13 | 8 | 1 | 4 | 13 | 36 | 20 | 31 | 72 | 175 | 64 | 57 | 1 | 2 | 0 | 1 | 3 | 4 | 0 | 2 |
| | Crosswalk (A-B-C) | 53 | 216 | 105 | 151 | 180 | 183 | 405 | 442 | 94 | 65 | 268 | 208 | 28 | 14 | 48 | 46 | 60 | 42 | 168 | 160 |
| | Crosswalk (C-D-A) | 133 | 574 | 55 | 228 | 336 | 359 | 311 | 272 | 529 | 173 | 247 | 46 | 89 | 38 | 37 | 4 | 167 | 109 | 75 | 38 |

# Appendix S.5.2

**PEDESTRIAN VOLUMES (SIDEWALKS, CORNERS, AND CROSSWALKS)**
**2025 FUTURE WITHOUT THE PROPOSED ACTION**

| Intersection | Elements | Weekday AM Peak 15-Min. | | | | Weekday MD Peak 15-Min. | | | | Weekday PM Peak 15-Min. | | | | Special Events Evening Peak 15-Min. | | | | Special Events Sunday Peak 15-Min. | | | |
|---|---|---|---|---|---|---|---|---|---|---|---|---|---|---|---|---|---|---|---|---|---|
| ***Ninth Ave & W. 34th St*** | Sidewalk A | 74 | 89 | 76 | 82 | 205 | 217 | 213 | 236 | 126 | 108 | 177 | 117 | 32 | 28 | 27 | 49 | 87 | 76 | 30 | 64 |
| | Sidewalk B | 103 | 97 | 81 | 177 | 280 | 225 | 211 | 181 | 180 | 177 | 288 | 121 | 34 | 73 | 63 | 77 | 121 | 118 | 141 | 112 |
| | Sidewalk C | 100 | 168 | 48 | 127 | 203 | 173 | 388 | 343 | 334 | 85 | 191 | 199 | 100 | 69 | 57 | 46 | 164 | 116 | 181 | 189 |
| | Sidewalk D | 42 | 142 | 56 | 164 | 221 | 331 | 167 | 146 | 248 | 67 | 214 | 78 | 30 | 16 | 55 | 26 | 48 | 37 | 86 | 66 |
| | Corner A & B | 156 | 208 | 147 | 205 | 36 | 44 | 18 | 13 | 94 | 183 | 89 | 176 | 1 | 7 | 26 | 16 | 1 | 4 | 12 | 9 |
| | Corner C & D | 141 | 149 | 123 | 121 | 72 | 85 | 49 | 79 | 82 | 150 | 60 | 115 | 24 | 26 | 6 | 4 | 52 | 56 | 10 | 7 |
| | Crosswalk (A-B-C) | 112 | 148 | 76 | 159 | 234 | 209 | 325 | 297 | 408 | 156 | 195 | 244 | 56 | 40 | 46 | 56 | 128 | 98 | 157 | 147 |
| | Crosswalk (C-D-A) | 79 | 237 | 40 | 110 | 154 | 170 | 203 | 223 | 259 | 112 | 235 | 78 | 47 | 47 | 28 | 20 | 105 | 83 | 26 | 36 |
| ***Ninth Ave & W. 37th St*** | Sidewalk A | 20 | 15 | 34 | 253 | 52 | 55 | 46 | 259 | 71 | 19 | 91 | 224 | | | | | | | | |
| | Sidewalk B | 66 | 119 | 16 | 78 | 149 | 147 | 39 | 113 | 164 | 108 | 54 | 83 | | | | | | | | |
| | Sidewalk C | 24 | 28 | 85 | 123 | 37 | 42 | 195 | 141 | 47 | 24 | 225 | 84 | | | | | | | | |
| | Sidewalk D | 22 | 240 | 13 | 17 | 81 | 265 | 45 | 25 | 43 | 236 | 60 | 13 | | | | | | | | |
| | Corner A & B | 7 | 72 | 9 | 7 | 12 | 74 | 15 | 13 | 17 | 68 | 7 | 7 | | | | | | | | |
| | Corner C & D | 16 | 16 | 4 | 1 | 19 | 17 | 4 | 5 | 8 | 11 | 0 | 7 | | | | | | | | |
| | Crosswalk (A-B-C) | 12 | 11 | 68 | 107 | 47 | 59 | 165 | 136 | 87 | 24 | 224 | 91 | | | | | | | | |
| | Crosswalk (C-D-A) | 13 | 11 | 33 | 243 | 49 | 28 | 58 | 265 | 58 | 15 | 75 | 222 | | | | | | | | |
| ***Ninth Ave & W. 38th St*** | Sidewalk A | 4 | 4 | 24 | 46 | 18 | 22 | 65 | 98 | 28 | 13 | 49 | 80 | | | | | | | | |
| | Sidewalk B | 45 | 80 | 1 | 27 | 57 | 72 | 28 | 30 | 52 | 78 | 41 | 54 | | | | | | | | |
| | Sidewalk C | 16 | 23 | 88 | 78 | 16 | 26 | 58 | 68 | 17 | 12 | 92 | 101 | | | | | | | | |
| | Sidewalk D | 26 | 19 | 13 | 7 | 66 | 47 | 21 | 36 | 45 | 53 | 14 | 10 | | | | | | | | |
| | Corner A & B | 2 | 8 | 1 | 9 | 10 | 9 | 6 | 11 | 8 | 4 | 10 | 10 | | | | | | | | |
| | Corner C & D | 4 | 7 | 0 | 1 | 15 | 14 | 0 | 5 | 5 | 6 | 1 | 3 | | | | | | | | |
| | Crosswalk (A-B-C) | 15 | 2 | 83 | 82 | 16 | 10 | 69 | 69 | 26 | 24 | 119 | 73 | | | | | | | | |
| | Crosswalk (C-D-A) | 5 | 11 | 45 | 28 | 11 | 15 | 59 | 72 | 22 | 21 | 53 | 32 | | | | | | | | |
| ***Ninth Ave & W. 39th St*** | Sidewalk A | 17 | 26 | 28 | 61 | 24 | 31 | 50 | 63 | 29 | 26 | 99 | 54 | | | | | | | | |
| | Sidewalk B | 52 | 155 | 25 | 23 | 105 | 99 | 40 | 59 | 208 | 97 | 41 | 40 | | | | | | | | |
| | Sidewalk C | 31 | 26 | 46 | 119 | 57 | 54 | 125 | 107 | 43 | 44 | 211 | 99 | | | | | | | | |
| | Sidewalk D | 48 | 49 | 15 | 11 | 91 | 63 | 28 | 24 | 97 | 66 | 23 | 24 | | | | | | | | |
| | Corner A & B | 2 | 11 | 9 | 7 | 0 | 4 | 7 | 9 | 7 | 4 | 8 | 5 | | | | | | | | |
| | Corner C & D | 11 | 3 | 0 | 4 | 11 | 22 | 0 | 3 | 9 | 9 | 3 | 4 | | | | | | | | |
| | Crosswalk (A-B-C) | 20 | 23 | 43 | 127 | 35 | 39 | 120 | 91 | 46 | 48 | 217 | 107 | | | | | | | | |
| | Crosswalk (C-D-A) | 31 | 20 | 25 | 54 | 65 | 40 | 37 | 36 | 48 | 45 | 95 | 40 | | | | | | | | |
| ***Ninth Ave & W. 42nd St*** | Sidewalk A | 219 | 75 | 102 | 89 | 222 | 148 | 205 | 152 | 315 | 163 | 207 | 169 | | | | | | | | |
| | Sidewalk B | 101 | 117 | 227 | 140 | 151 | 143 | 247 | 190 | 184 | 175 | 325 | 245 | | | | | | | | |
| | Sidewalk C | 202 | 159 | 149 | 144 | 229 | 272 | 162 | 124 | 231 | 233 | 205 | 169 | | | | | | | | |
| | Sidewalk D | 45 | 40 | 154 | 64 | 106 | 128 | 161 | 137 | 99 | 100 | 151 | 146 | | | | | | | | |
| | Corner A & B | 15 | 18 | 12 | 21 | 26 | 33 | 24 | 31 | 18 | 39 | 22 | 41 | | | | | | | | |
| | Corner C & D | 34 | 12 | 6 | 7 | 32 | 36 | 2 | 9 | 25 | 26 | 12 | 6 | | | | | | | | |
| | Crosswalk (A-B-C) | 239 | 96 | 114 | 164 | 237 | 184 | 163 | 172 | 340 | 238 | 186 | 259 | | | | | | | | |
| | Crosswalk (C-D-A) | 167 | 115 | 115 | 84 | 202 | 219 | 156 | 137 | 203 | 193 | 197 | 210 | | | | | | | | |
| ***Eighth Ave & W. 30th St*** | Sidewalk A | 56 | 22 | 105 | 100 | 39 | 59 | 218 | 288 | 26 | 58 | 144 | 157 | 19 | 35 | 72 | 64 | 62 | 50 | 139 | 132 |
| | Sidewalk B | 116 | 265 | 37 | 15 | 189 | 245 | 71 | 109 | 253 | 200 | 61 | 99 | 168 | 113 | 29 | 61 | 124 | 135 | 43 | 40 |
| | Sidewalk C | 51 | 27 | 57 | 124 | 61 | 80 | 132 | 92 | 23 | 40 | 197 | 111 | 13 | 29 | 84 | 33 | 22 | 20 | 79 | 76 |
| | Sidewalk D | 87 | 89 | 33 | 14 | 152 | 194 | 32 | 44 | 121 | 125 | 22 | 49 | 83 | 61 | 23 | 29 | 88 | 73 | 40 | 42 |
| | Corner A & B | 30 | 13 | 44 | 15 | 18 | 21 | 39 | 41 | 10 | 30 | 46 | 60 | 10 | 21 | 19 | 42 | 31 | 25 | 20 | 9 |
| | Corner C & D | 13 | 9 | 0 | 12 | 17 | 16 | 11 | 11 | 6 | 10 | 0 | 3 | 6 | 1 | 4 | 2 | 1 | 8 | 17 | 10 |
| | Crosswalk (A-B-C) | 22 | 56 | 61 | 137 | 45 | 66 | 135 | 140 | 30 | 51 | 201 | 135 | 12 | 18 | 69 | 36 | 36 | 34 | 81 | 78 |
| | Crosswalk (C-D-A) | 37 | 19 | 76 | 80 | 38 | 66 | 127 | 155 | 22 | 44 | 121 | 134 | 21 | 13 | 65 | 50 | 26 | 24 | 93 | 77 |
| ***Eighth Ave & W. 31st St*** | Sidewalk A | 178 | 196 | 60 | 150 | 358 | 239 | 58 | 194 | 303 | 78 | 98 | 215 | 86 | 22 | 71 | 107 | 162 | 87 | 80 | 119 |
| | Sidewalk B | 39 | 106 | 144 | 319 | 97 | 75 | 321 | 208 | 126 | 104 | 342 | 109 | 73 | 58 | 122 | 27 | 146 | 148 | 215 | 128 |
| | Sidewalk C | 17 | 25 | 58 | 86 | 54 | 54 | 184 | 101 | 22 | 33 | 142 | 37 | 1 | 22 | 153 | 74 | 25 | 19 | 120 | 106 |
| | Sidewalk D | 68 | 59 | 32 | 101 | 166 | 141 | 103 | 74 | 76 | 105 | 64 | 74 | 129 | 135 | 75 | 59 | 92 | 97 | 16 | 10 |
| | Corner A & B | 20 | 40 | 22 | 17 | 30 | 47 | 32 | 28 | 28 | 22 | 32 | 23 | 21 | 10 | 39 | 84 | 9 | 10 | 37 | 33 |
| | Corner C & D | 12 | 8 | 22 | 11 | 7 | 7 | 28 | 33 | 7 | 7 | 17 | 19 | 1 | 3 | 44 | 57 | 7 | 10 | 2 | 2 |
| | Crosswalk (A-B-C) | 152 | 248 | 87 | 222 | 344 | 237 | 127 | 185 | 359 | 110 | 139 | 145 | 102 | 66 | 128 | 80 | 143 | 83 | 142 | 80 |
| | Crosswalk (C-D-A) | 39 | 91 | 97 | 101 | 89 | 134 | 194 | 215 | 66 | 91 | 164 | 128 | 33 | 29 | 69 | 67 | 53 | 46 | 111 | 101 |
| ***Eighth Ave & W. 33rd St*** | Sidewalk A | 183 | 412 | 432 | 423 | 273 | 217 | 685 | 435 | 233 | 142 | 760 | 456 | 74 | 30 | 249 | 160 | 157 | 49 | 348 | 254 |
| | Sidewalk B | 179 | 171 | 241 | 253 | 225 | 145 | 227 | 174 | 384 | 103 | 254 | 203 | 93 | 252 | 79 | 124 | 325 | 274 | 123 | 120 |
| | Sidewalk C | 242 | 393 | 243 | 138 | 517 | 452 | 252 | 205 | 471 | 412 | 201 | 358 | 134 | 264 | 172 | 246 | 258 | 216 | 110 | 87 |
| | Sidewalk D | 175 | 174 | 359 | 380 | 297 | 222 | 813 | 628 | 309 | 114 | 837 | 363 | 150 | 86 | 233 | 74 | 168 | 93 | 343 | 217 |
| | Corner A & B | 25 | 36 | 31 | 17 | 55 | 31 | 74 | 58 | 86 | 45 | 54 | 60 | 15 | 8 | 34 | 30 | 42 | 13 | 49 | 41 |
| | Corner C & D | 32 | 24 | 22 | 31 | 74 | 86 | 70 | 78 | 42 | 86 | 59 | 68 | 25 | 28 | 44 | 28 | 131 | 67 | 16 | 21 |
| | Crosswalk (A-B-C) | 328 | 289 | 308 | 143 | 282 | 298 | 376 | 337 | 616 | 246 | 680 | 197 | 85 | 135 | 135 | 285 | 157 | 126 | 200 | 256 |
| | Crosswalk (C-D-A) | 478 | 404 | 807 | 375 | 593 | 433 | 606 | 396 | 669 | 314 | 774 | 401 | 255 | 134 | 400 | 208 | 292 | 181 | 340 | 182 |
| ***Eighth Ave & W. 34th St*** | Sidewalk A | 375 | 196 | 149 | 172 | 390 | 195 | 280 | 262 | 513 | 182 | 333 | 347 | 234 | 84 | 61 | 60 | 359 | 150 | 199 | 176 |
| | Sidewalk B | 170 | 105 | 152 | 198 | 143 | 113 | 304 | 278 | 202 | 116 | 237 | 271 | 122 | 135 | 189 | 266 | 261 | 240 | 376 | 310 |
| | Sidewalk C | 114 | 169 | 188 | 55 | 184 | 162 | 143 | 95 | 230 | 128 | 184 | 100 | 177 | 78 | 41 | 57 | 302 | 199 | 184 | 229 |
| | Sidewalk D | 281 | 190 | 118 | 91 | 418 | 287 | 144 | 69 | 430 | 382 | 191 | 72 | 219 | 71 | 46 | 52 | 303 | 173 | 264 | 231 |
| | Corner A & B | 49 | 48 | 52 | 51 | 67 | 53 | 58 | 62 | 95 | 60 | 116 | 119 | 110 | 193 | 822 | 976 | 36 | 26 | 120 | 35 |
| | Corner C & D | 23 | 23 | 29 | 36 | 54 | 28 | 28 | 29 | 64 | 33 | 71 | 47 | 130 | 258 | 161 | 58 | 25 | 25 | 53 | 20 |
| | Crosswalk (A-B-C) | 250 | 219 | 195 | 165 | 489 | 358 | 290 | 262 | 540 | 279 | 247 | 401 | 169 | 66 | 180 | 289 | 326 | 163 | 195 | 135 |
| | Crosswalk (C-D-A) | 168 | 219 | 281 | 236 | 251 | 260 | 438 | 456 | 305 | 168 | 461 | 505 | 801 | 926 | 104 | 115 | 393 | 160 | 211 | 259 |
| ***Eighth Ave & W. 37th St*** | Sidewalk A | 22 | 42 | 274 | 250 | 196 | 121 | 86 | 135 | 46 | 33 | 287 | 371 | | | | | | | | |
| | Sidewalk B | 163 | 297 | 110 | 37 | 235 | 267 | 71 | 71 | 417 | 390 | 30 | 111 | | | | | | | | |
| | Sidewalk C | 58 | 25 | 188 | 188 | 73 | 151 | 90 | 92 | 75 | 56 | 316 | 257 | | | | | | | | |
| | Sidewalk D | 233 | 258 | 49 | 28 | 238 | 127 | 164 | 71 | 445 | 425 | 74 | 91 | | | | | | | | |
| | Corner A & B | 16 | 19 | 71 | 36 | 26 | 24 | 25 | 23 | 25 | 18 | 19 | 16 | | | | | | | | |
| | Corner C & D | 22 | 26 | 25 | 27 | 26 | 19 | 30 | 30 | 74 | 22 | 93 | 32 | | | | | | | | |
| | Crosswalk (A-B-C) | 55 | 43 | 184 | 188 | 187 | 138 | 195 | 212 | 45 | 87 | 281 | 347 | | | | | | | | |
| | Crosswalk (C-D-A) | 50 | 58 | 285 | 254 | 164 | 191 | 323 | 231 | 50 | 124 | 464 | 380 | | | | | | | | |
| ***Eighth Ave & W. 38th St*** | Sidewalk A | 32 | 59 | 125 | 186 | 43 | 48 | 147 | 133 | 23 | 28 | 270 | 453 | | | | | | | | |
| | Sidewalk B | 70 | 264 | 124 | 33 | 50 | 157 | 34 | 8 | 141 | 317 | 46 | 62 | | | | | | | | |
| | Sidewalk C | 36 | 31 | 72 | 111 | 109 | 17 | 120 | 136 | 22 | 24 | 204 | 539 | | | | | | | | |
| | Sidewalk D | 136 | 218 | 22 | 26 | 145 | 165 | 58 | 53 | 165 | 470 | 2 | 3 | | | | | | | | |
| | Corner A & B | 24 | 91 | 85 | 28 | 208 | 164 | 172 | 132 | 13 | 21 | 12 | 17 | | | | | | | | |
| | Corner C & D | 29 | 35 | 10 | 12 | 161 | 117 | 117 | 87 | 17 | 17 | 12 | 17 | | | | | | | | |
| | Crosswalk (A-B-C) | 30 | 18 | 55 | 101 | 21 | 22 | 138 | 105 | 5 | 14 | 26 | 30 | | | | | | | | |
| | Crosswalk (C-D-A) | 29 | 29 | 121 | 188 | 66 | 73 | 98 | 74 | 54 | 26 | 12 | 176 | | | | | | | | |

# Appendix S.5.2

**PEDESTRIAN VOLUMES (SIDEWALKS, CORNERS, AND CROSSWALKS)**
**2025 FUTURE WITHOUT THE PROPOSED ACTION**

| Intersection | Elements | Weekday AM Peak 15-Min. | | | | Weekday MD Peak 15-Min. | | | | Weekday PM Peak 15-Min. | | | | Special Events Evening Peak 15-Min. | | | | Special Events Sunday Peak 15-Min. | | | |
|---|---|---|---|---|---|---|---|---|---|---|---|---|---|---|---|---|---|---|---|---|---|
| ***Eighth Ave & W. 39th St*** | Sidewalk A | 55 | 77 | 110 | 587 | 127 | 80 | 277 | 412 | 124 | 39 | 705 | 409 | | | | | | | | |
| | Sidewalk B | 86 | 1366 | 246 | 59 | 294 | 502 | 148 | 188 | 957 | 344 | 33 | 141 | | | | | | | | |
| | Sidewalk C | 138 | 51 | 141 | 464 | 145 | 225 | 338 | 277 | 50 | 192 | 672 | 220 | | | | | | | | |
| | Sidewalk D | 213 | 635 | 80 | 73 | 464 | 351 | 154 | 92 | 873 | 344 | 85 | 45 | | | | | | | | |
| | Corner A & B | 13 | 26 | 58 | 23 | 27 | 43 | 35 | 39 | 22 | 29 | 10 | 94 | | | | | | | | |
| | Corner C & D | 40 | 21 | 18 | 57 | 39 | 73 | 26 | 30 | 13 | 22 | 12 | 18 | | | | | | | | |
| | Crosswalk (A-B-C) | 116 | 25 | 107 | 677 | 112 | 106 | 240 | 315 | 69 | 84 | 503 | 339 | | | | | | | | |
| | Crosswalk (C-D-A) | 70 | 86 | 191 | 512 | 100 | 736 | 388 | 337 | 80 | 158 | 1135 | 343 | | | | | | | | |
| ***Eighth Ave & W. 42nd St*** | Sidewalk A | 481 | 286 | 657 | 161 | 409 | 304 | 275 | 309 | 464 | 584 | 273 | 1533 | | | | | | | | |
| | Sidewalk B | 480 | 160 | 354 | 94 | 299 | 333 | 451 | 320 | 424 | 395 | 357 | 247 | | | | | | | | |
| | Sidewalk C | 1049 | 327 | 596 | 144 | 589 | 453 | 492 | 530 | 706 | 1244 | 470 | 765 | | | | | | | | |
| | Sidewalk D | 805 | 94 | 385 | 100 | 365 | 398 | 358 | 287 | 244 | 1634 | 439 | 457 | | | | | | | | |
| | Corner A & B | 45 | 46 | 60 | 47 | 4 | 46 | 75 | 110 | 26 | 174 | 99 | 192 | | | | | | | | |
| | Corner C & D | 8 | 241 | 45 | 41 | 26 | 117 | 91 | 81 | 41 | 75 | 60 | 95 | | | | | | | | |
| | Crosswalk (A-B-C) | 288 | 385 | 458 | 139 | 308 | 246 | 443 | 402 | 552 | 300 | 600 | 694 | | | | | | | | |
| | Crosswalk (C-D-A) | 1266 | 231 | 927 | 230 | 406 | 424 | 313 | 322 | 446 | 1166 | 254 | 1312 | | | | | | | | |
| ***Seventh Ave & W. 31st St*** | Sidewalk A | 158 | 212 | 86 | 522 | 261 | 217 | 271 | 319 | 435 | 204 | 443 | 338 | | | | | | | | |
| | Sidewalk B | 321 | 665 | 362 | 261 | 399 | 204 | 142 | 220 | 491 | 255 | 378 | 425 | | | | | | | | |
| | Sidewalk C | 173 | 133 | 111 | 368 | 162 | 146 | 201 | 166 | 251 | 358 | 340 | 348 | | | | | | | | |
| | Sidewalk D | 105 | 758 | 116 | 59 | 327 | 258 | 57 | 45 | 268 | 292 | 222 | 224 | | | | | | | | |
| | Corner A & B | 17 | 1 | 141 | 19 | 19 | 17 | 134 | 36 | 18 | 23 | 101 | 39 | | | | | | | | |
| | Corner C & D | 11 | 51 | 20 | 46 | 40 | 40 | 12 | 17 | 28 | 28 | 28 | 22 | | | | | | | | |
| | Crosswalk (A-B-C) | 440 | 302 | 112 | 317 | 293 | 227 | 235 | 315 | 485 | 398 | 310 | 281 | | | | | | | | |
| | Crosswalk (C-D-A) | 146 | 186 | 107 | 434 | 142 | 126 | 175 | 197 | 272 | 358 | 366 | 297 | | | | | | | | |
| ***Seventh Ave & W. 33rd St*** | Sidewalk A | 208 | 264 | 207 | 421 | 283 | 227 | 374 | 302 | 273 | 375 | 312 | 362 | | | | | | | | |
| | Sidewalk B | 298 | 436 | 300 | 200 | 337 | 473 | 248 | 188 | 287 | 453 | 340 | 349 | | | | | | | | |
| | Sidewalk C | 426 | 244 | 381 | 251 | 304 | 291 | 361 | 271 | 389 | 344 | 299 | 265 | | | | | | | | |
| | Sidewalk D | 580 | 226 | 248 | 443 | 301 | 270 | 425 | 358 | 303 | 451 | 427 | 460 | | | | | | | | |
| | Corner A & B | 46 | 29 | 37 | 62 | 25 | 40 | 67 | 101 | 29 | 17 | 34 | 80 | | | | | | | | |
| | Corner C & D | 28 | 68 | 68 | 40 | 51 | 68 | 46 | 46 | 57 | 28 | 33 | 57 | | | | | | | | |
| | Crosswalk (A-B-C) | 376 | 332 | 356 | 306 | 306 | 332 | 340 | 331 | 401 | 500 | 328 | 373 | | | | | | | | |
| | Crosswalk (C-D-A) | 515 | 524 | 327 | 392 | 427 | 433 | 393 | 363 | 457 | 513 | 380 | 443 | | | | | | | | |
| ***Seventh Ave & W. 34th St*** | Sidewalk A | 234 | 99 | 483 | 130 | 313 | 232 | 273 | 253 | 848 | 366 | 464 | 649 | | | | | | | | |
| | Sidewalk B | 615 | 72 | 191 | 191 | 197 | 175 | 355 | 241 | 280 | 822 | 935 | 139 | | | | | | | | |
| | Sidewalk C | 501 | 359 | 218 | 199 | 244 | 199 | 248 | 206 | 340 | 526 | 281 | 641 | | | | | | | | |
| | Sidewalk D | 198 | 199 | 1090 | 150 | 159 | 165 | 196 | 198 | 446 | 390 | 419 | 596 | | | | | | | | |
| | Corner A & B | 227 | 34 | 36 | 112 | 362 | 406 | 309 | 343 | 581 | 533 | 539 | 471 | | | | | | | | |
| | Corner C & D | 75 | 54 | 47 | 34 | 291 | 291 | 210 | 238 | 510 | 408 | 400 | 347 | | | | | | | | |
| | Crosswalk (A-B-C) | 569 | 136 | 303 | 156 | 437 | 387 | 251 | 268 | 149 | 123 | 105 | 109 | | | | | | | | |
| | Crosswalk (C-D-A) | 583 | 221 | 990 | 233 | 261 | 243 | 293 | 298 | 197 | 124 | 96 | 159 | | | | | | | | |
| ***Sixth Ave & W. 33rd St*** | Sidewalk A | 211 | 73 | 221 | 163 | 155 | 84 | 364 | 311 | 197 | 304 | 666 | 528 | | | | | | | | |
| | Sidewalk B | 238 | 193 | 243 | 46 | 254 | 189 | 120 | 182 | 354 | 289 | 121 | 515 | | | | | | | | |
| | Sidewalk C | 326 | 90 | 194 | 182 | 226 | 260 | 259 | 260 | 258 | 506 | 261 | 343 | | | | | | | | |
| | Sidewalk D | 436 | 276 | 261 | 325 | 304 | 350 | 238 | 173 | 629 | 778 | 432 | 562 | | | | | | | | |
| | Corner A & B | 17 | 1 | 17 | 17 | 39 | 39 | 33 | 33 | 34 | 35 | 33 | 79 | | | | | | | | |
| | Corner C & D | 0 | 62 | 56 | 87 | 33 | 33 | 77 | 115 | 68 | 68 | 80 | 184 | | | | | | | | |
| | Crosswalk (A-B-C) | 343 | 137 | 173 | 214 | 307 | 315 | 311 | 246 | 294 | 555 | 433 | 377 | | | | | | | | |
| | Crosswalk (C-D-A) | 376 | 186 | 367 | 167 | 284 | 272 | 356 | 333 | 514 | 663 | 384 | 421 | | | | | | | | |
| ***Sixth Ave & W. 34th St*** | Sidewalk A | 12 | 9 | 1 | 1 | 26 | 25 | 9 | 8 | 18 | 22 | 2 | 2 | 0 | 0 | 0 | 0 | 0 | 0 | 0 | 0 |
| | Sidewalk B | 511 | 394 | 383 | 145 | 862 | 967 | 392 | 579 | 773 | 847 | 643 | 914 | 153 | 167 | 209 | 467 | 473 | 344 | 327 | 251 |
| | Sidewalk C | 439 | 98 | 412 | 375 | 302 | 316 | 850 | 912 | 605 | 525 | 456 | 577 | 235 | 288 | 248 | 187 | 423 | 365 | 227 | 194 |
| | Sidewalk D | 0 | 0 | 12 | 9 | 0 | 1 | 26 | 25 | 0 | 0 | 18 | 22 | 0 | 0 | 0 | 0 | 0 | 0 | 0 | 0 |
| | Corner A & B | 1 | 1 | 90 | 50 | 8 | 6 | 199 | 251 | 2 | 2 | 73 | 443 | 0 | 0 | 55 | 152 | 0 | 0 | 90 | 213 |
| | Corner C & D | 44 | 25 | 0 | 0 | 92 | 54 | 0 | 0 | 31 | 19 | 0 | 0 | 17 | 59 | 0 | 0 | 42 | 22 | 0 | 0 |
| | Crosswalk (A-B-C) | 170 | 448 | 460 | 301 | 866 | 681 | 601 | 760 | 933 | 547 | 328 | 771 | 249 | 139 | 184 | 211 | 315 | 458 | 405 | 347 |
| | Crosswalk (C-D-A) | 649 | 86 | 1 | 0 | 859 | 685 | 2 | 2 | 693 | 772 | 0 | 1 | 212 | 320 | 0 | 0 | 518 | 424 | 0 | 0 |
| ***Broadway & W. 34th St*** | Sidewalk A | 429 | 169 | 781 | 177 | 395 | 534 | 757 | 838 | 790 | 1317 | 802 | 1136 | 430 | 294 | 205 | 303 | 478 | 618 | 465 | 416 |
| | Sidewalk B | 3 | 2 | 12 | 9 | 18 | 16 | 26 | 26 | 4 | 5 | 18 | 22 | 0 | 0 | 0 | 0 | 0 | 0 | 0 | 0 |
| | Sidewalk C | 12 | 9 | 1 | 1 | 26 | 26 | 13 | 15 | 18 | 22 | 3 | 3 | 0 | 0 | 0 | 0 | 0 | 0 | 0 | 0 |
| | Sidewalk D | 596 | 358 | 560 | 185 | 921 | 856 | 721 | 422 | 966 | 927 | 911 | 1010 | 334 | 296 | 428 | 486 | 598 | 542 | 609 | 559 |
| | Corner A & B | 253 | 52 | 0 | 0 | 141 | 184 | 0 | 0 | 118 | 475 | 0 | 0 | 42 | 69 | 0 | 0 | 106 | 174 | 0 | 0 |
| | Corner C & D | 0 | 0 | 51 | 253 | 0 | 0 | 282 | 396 | 0 | 0 | 557 | 535 | 0 | 0 | 133 | 119 | 0 | 0 | 194 | 59 |
| | Crosswalk (A-B-C) | 1148 | 198 | 3 | 1 | 1053 | 709 | 10 | 10 | 512 | 1165 | 3 | 4 | 369 | 182 | 0 | 0 | 344 | 442 | 0 | 0 |
| | Crosswalk (C-D-A) | 652 | 87 | 570 | 104 | 694 | 864 | 939 | 1052 | 695 | 776 | 787 | 1119 | 212 | 321 | 281 | 160 | 303 | 317 | 286 | 275 |

# Appendix S.5.2

**NET INCREMENTAL PEDESTRIAN VOLUMES (SIDEWALKS, CORNERS, AND CROSSWALKS)**
**2010 FUTURE WITH THE PROPOSED ACTION**

| Intersection | Elements | Weekday AM Peak 15-Min. | | | | Weekday MD Peak 15-Min. | | | | Weekday PM Peak 15-Min. | | | | Special Events Evening Peak 15-Min. | | | | Special Events Sunday Peak 15-Min. | | | |
|---|---|---|---|---|---|---|---|---|---|---|---|---|---|---|---|---|---|---|---|---|---|
| ***Rt 9A & West 30th St*** | Sidewalk A | 0 | 0 | 0 | 1 | 0 | 0 | 0 | 0 | 0 | 0 | 1 | 0 | 0 | 0 | 0 | 0 | 0 | 0 | 0 | 0 |
| | Sidewalk B | 0 | 0 | 0 | 0 | 0 | 0 | 0 | 0 | 0 | 0 | 0 | 0 | 0 | 0 | 0 | 0 | 0 | 0 | 0 | 0 |
| | Sidewalk C | 0 | 0 | 0 | 0 | 0 | 0 | 0 | 0 | 0 | 0 | 0 | 0 | 0 | 0 | 0 | 0 | 0 | 0 | 0 | 0 |
| | Sidewalk D | 0 | 0 | 0 | 0 | 0 | 0 | 0 | 0 | 0 | 0 | 0 | 0 | 0 | 0 | 0 | 0 | 0 | 0 | 0 | 0 |
| | Corner A & B | 0 | 0 | 0 | 0 | 0 | 0 | 0 | 0 | 0 | 0 | 0 | 0 | 0 | 0 | 0 | 0 | 0 | 0 | 0 | 0 |
| | Corner C & D | 0 | 0 | 0 | 0 | 0 | 0 | 0 | 0 | 0 | 0 | 0 | 0 | 0 | 0 | 0 | 0 | 0 | 0 | 0 | 0 |
| | Crosswalk (A-B-C) | 0 | 0 | 1 | 0 | 0 | 0 | 0 | 0 | 0 | 0 | 0 | 1 | 0 | 0 | 0 | 0 | 0 | 0 | 0 | 0 |
| | Crosswalk (C-D-A) | 1 | 0 | 0 | 0 | 0 | 0 | 0 | 0 | 0 | 1 | 0 | 0 | 0 | 0 | 0 | 0 | 0 | 0 | 0 | 0 |
| ***Rt 9A & West 34th St*** | Sidewalk A | 0 | 0 | 0 | 3 | 0 | 0 | 1 | 2 | 0 | 0 | 6 | 0 | 0 | 0 | 0 | 1074 | 0 | 0 | 1078 | 0 |
| | Sidewalk B | 0 | 3 | 1 | 0 | 1 | 3 | 1 | 1 | 7 | 0 | 0 | 2 | 0 | 605 | 0 | 0 | 606 | 0 | 0 | 0 |
| | Sidewalk C | 5 | 0 | 0 | 0 | 4 | 2 | 0 | 0 | 1 | 11 | 0 | 0 | 1679 | 0 | 0 | 0 | 0 | 1684 | 0 | 0 |
| | Sidewalk D | 0 | 1 | 0 | 0 | 0 | 0 | 0 | 0 | 1 | 0 | 0 | 0 | 0 | 0 | 0 | 0 | 0 | 0 | 0 | 0 |
| | Corner A & B | 0 | 0 | 0 | 1 | 0 | 0 | 0 | 1 | 0 | 0 | 2 | 0 | 0 | 0 | 0 | 0 | 0 | 0 | 0 | 0 |
| | Corner C & D | 0 | 0 | 0 | 0 | 0 | 0 | 0 | 0 | 0 | 0 | 0 | 0 | 0 | 0 | 0 | 0 | 0 | 0 | 0 | 0 |
| | Crosswalk (A-B-C) | 0 | 0 | 0 | 3 | 0 | 0 | 1 | 2 | 0 | 0 | 5 | 0 | 0 | 0 | 0 | 605 | 0 | 0 | 606 | 0 |
| | Crosswalk (C-D-A) | 2 | 0 | 0 | 0 | 2 | 1 | 0 | 0 | 0 | 5 | 0 | 0 | 1074 | 0 | 0 | 0 | 0 | 1078 | 0 | 0 |
| ***Rt 9A & West 39th St*** | Sidewalk A | 0 | 0 | 0 | 0 | 0 | 0 | 0 | 0 | 0 | 0 | 0 | 0 | | | | | | | | |
| | Sidewalk B | 0 | 0 | 0 | 0 | 0 | 0 | 0 | 0 | 0 | 0 | 0 | 0 | | | | | | | | |
| | Sidewalk C | 1 | -1 | 0 | 3 | 1 | 0 | 1 | 3 | 0 | 2 | 7 | 0 | | | | | | | | |
| | Sidewalk D | 0 | 3 | 0 | 0 | 1 | 2 | 0 | 0 | 6 | 0 | 0 | 0 | | | | | | | | |
| | Corner A & B | 0 | 0 | 0 | 0 | 0 | 0 | 0 | 0 | 0 | 0 | 0 | 0 | | | | | | | | |
| | Corner C & D | 0 | 0 | 0 | 0 | 0 | 0 | 0 | 0 | 0 | 0 | 0 | 0 | | | | | | | | |
| | Crosswalk (A-B-C) | 0 | 0 | 0 | 0 | 0 | 0 | 0 | 0 | 0 | 0 | 0 | 0 | | | | | | | | |
| | Crosswalk (C-D-A) | 4 | -3 | 0 | 0 | 2 | 1 | 0 | 0 | -3 | 9 | 0 | 0 | | | | | | | | |
| ***Rt 9A & West 40th St*** | Sidewalk A | 0 | 0 | 0 | 0 | 0 | 0 | 0 | 0 | 0 | 0 | 0 | 0 | | | | | | | | |
| | Sidewalk B | 0 | 1 | 1 | 0 | 0 | 0 | 0 | 0 | 1 | -3 | -1 | 1 | | | | | | | | |
| | Sidewalk C | 0 | 0 | 0 | 0 | 0 | 0 | 0 | 0 | 0 | 0 | 0 | 0 | | | | | | | | |
| | Sidewalk D | 0 | 0 | 0 | 0 | 0 | 0 | 0 | 0 | 0 | 0 | 0 | 0 | | | | | | | | |
| | Corner A & B | 0 | 0 | 0 | 1 | 0 | 0 | 0 | 0 | 0 | 0 | 1 | -1 | | | | | | | | |
| | Corner C & D | 0 | 0 | 0 | 0 | 0 | 0 | 0 | 0 | 0 | 0 | 0 | 0 | | | | | | | | |
| | Crosswalk (A-B-C) | 0 | 0 | 0 | 0 | 0 | 0 | 0 | 0 | 0 | 0 | 0 | 0 | | | | | | | | |
| | Crosswalk (C-D-A) | 0 | 0 | 0 | 0 | 0 | 0 | 0 | 0 | 0 | 0 | 0 | 0 | | | | | | | | |
| ***Rt 9A & West 42nd St*** | Sidewalk A | 0 | 0 | 1 | 0 | 0 | 0 | 1 | 1 | 0 | 0 | 0 | 1 | | | | | | | | |
| | Sidewalk B | 0 | 0 | -2 | 7 | 2 | 2 | 5 | 5 | 1 | 1 | 7 | -4 | | | | | | | | |
| | Sidewalk C | 0 | 0 | -1 | 1 | 0 | 0 | 0 | 0 | 0 | 0 | 1 | -3 | | | | | | | | |
| | Sidewalk D | 0 | 0 | 0 | 0 | 0 | 0 | 0 | 0 | 0 | 0 | 0 | 0 | | | | | | | | |
| | Corner A & B | 0 | 0 | 0 | 0 | 0 | 0 | 2 | 2 | 0 | 0 | 1 | 1 | | | | | | | | |
| | Corner C & D | 0 | 0 | 0 | 0 | 0 | 0 | 0 | 0 | 0 | 0 | 0 | 0 | | | | | | | | |
| | Crosswalk (A-B-C) | 0 | 1 | -1 | 6 | 0 | 1 | 0 | 3 | 1 | 0 | 1 | -6 | | | | | | | | |
| | Crosswalk (C-D-A) | 0 | 0 | 0 | 0 | 0 | 0 | 0 | 0 | 0 | 0 | 0 | 0 | | | | | | | | |
| ***Eleventh Ave & West 29th*** | Sidewalk A | 0 | 0 | 28 | 2 | 0 | 0 | 27 | 12 | 0 | 0 | 21 | 46 | | | | | | | | |
| | Sidewalk B | 40 | 4 | 1 | 47 | 34 | 27 | 13 | 26 | 22 | 64 | 82 | 24 | | | | | | | | |
| | Sidewalk C | 0 | 3 | 13 | 1 | 6 | 3 | 16 | 14 | 5 | 0 | 10 | 18 | | | | | | | | |
| | Sidewalk D | 5 | 1 | 0 | 0 | 16 | 7 | 0 | 0 | 10 | 5 | 0 | 0 | | | | | | | | |
| | Corner A & B | 0 | 0 | 24 | 1 | 0 | 0 | 15 | 8 | 0 | 0 | 12 | 41 | | | | | | | | |
| | Corner C & D | 0 | 0 | 0 | 0 | 0 | 0 | 0 | 0 | 0 | 0 | 0 | 0 | | | | | | | | |
| | Crosswalk (A-B-C) | 1 | 24 | 16 | 1 | 5 | 12 | 19 | 20 | 41 | 12 | 10 | 23 | | | | | | | | |
| | Crosswalk (C-D-A) | 0 | 0 | 5 | 1 | 0 | 0 | 16 | 7 | 0 | 0 | 10 | 5 | | | | | | | | |
| ***Eleventh Ave & West 30th*** | Sidewalk A | 0 | 12 | 28 | 2 | 3 | 10 | 33 | 18 | 27 | 11 | 21 | 42 | 0 | 0 | 1 | 1 | 0 | 0 | 2 | 6 |
| | Sidewalk B | 22 | 3 | 4 | 9 | 43 | 37 | 8 | 16 | 16 | 24 | 15 | 13 | 2 | 3 | 0 | 757 | 6 | 14 | 1197 | 3 |
| | Sidewalk C | 3 | 4 | 41 | 1 | 7 | 12 | 40 | 35 | 3 | 11 | 22 | 65 | 0 | 32 | 72 | 4 | 121 | 3 | 6 | 140 |
| | Sidewalk D | 30 | 2 | 0 | 0 | 34 | 18 | 0 | 0 | 22 | 46 | 0 | 0 | 164 | 0 | 0 | 0 | 2 | 320 | 0 | 0 |
| | Corner A & B | 0 | 0 | 2 | 0 | 0 | 0 | 8 | 7 | 0 | 0 | 5 | 1 | 0 | 0 | 0 | 0 | 0 | 0 | 1 | 4 |
| | Corner C & D | 4 | 1 | 0 | 0 | 0 | 3 | 0 | 0 | 0 | 6 | 0 | 0 | 1 | 1 | 0 | 0 | 2 | 2 | 0 | 0 |
| | Crosswalk (A-B-C) | 1 | 24 | 12 | 2 | 5 | 11 | 40 | 28 | 44 | 8 | 17 | 19 | 0 | 806 | 51 | 0 | 1191 | 0 | 3 | 7 |
| | Crosswalk (C-D-A) | 1 | 19 | 48 | 2 | 4 | 7 | 41 | 22 | 30 | 7 | 29 | 76 | 0 | 51 | 215 | 1 | 241 | 0 | 2 | 561 |
| ***Eleventh Ave & West 33rd*** | Sidewalk A | 0 | 0 | 23 | 31 | 0 | 0 | 43 | 37 | 0 | 0 | 92 | 29 | 0 | 0 | 1 | 3442 | 0 | 0 | 3942 | 26 |
| | Sidewalk B | 33 | 3 | 4 | 22 | 52 | 41 | 4 | 22 | 24 | 27 | 29 | 33 | 1 | 1 | 1 | 681 | 522 | 18 | 847 | 20 |
| | Sidewalk C | 0 | 26 | 24 | 1 | 5 | 22 | 50 | 43 | 34 | 28 | 17 | 24 | 0 | 3048 | 1 | 3 | 2970 | 16 | 6 | 14 |
| | Sidewalk D | 17 | 2 | 0 | 0 | 23 | 14 | 0 | 0 | 10 | 16 | 0 | 0 | 1 | 1 | 0 | 0 | 2 | 6 | 0 | 0 |
| | Corner A & B | 0 | 0 | 5 | 1 | 0 | 0 | 4 | 0 | 0 | 0 | 9 | 0 | 0 | 0 | 0 | 0 | 0 | 0 | 9 | 6 |
| | Corner C & D | 0 | 0 | 0 | 0 | 0 | 0 | 0 | 0 | 0 | 0 | 0 | 0 | 0 | 0 | 0 | 0 | 0 | 0 | 0 | 0 |
| | Crosswalk (A-B-C) | 5 | 23 | 31 | 1 | 4 | 23 | 54 | 44 | 29 | 34 | 26 | 28 | 1 | 681 | 1 | 3 | 1352 | 14 | 14 | 21 |
| | Crosswalk (C-D-A) | 3 | 22 | 18 | 2 | 5 | 18 | 26 | 14 | 35 | 24 | 19 | 13 | 0 | 3048 | 1 | 1 | 2964 | 9 | 11 | 12 |
| ***Eleventh Ave & West 34th*** | Sidewalk A | 1 | 0 | 82 | 8 | 1 | 1 | 82 | 3 | 0 | 2 | 176 | 1 | 0 | 0 | 1 | 368 | 0 | 0 | 960 | 99 |
| | Sidewalk B | 77 | 15 | 54 | 17 | 102 | 78 | 144 | 157 | 60 | 64 | 16 | 82 | 1 | 455 | 2 | 201 | 1083 | 37 | 251 | 24 |
| | Sidewalk C | 2 | 90 | 38 | 2 | 6 | 75 | 62 | 48 | 46 | 149 | 32 | 31 | 2 | 503 | 71 | 1 | 501 | 93 | 522 | 38 |
| | Sidewalk D | 24 | 42 | 5 | 0 | 55 | 53 | 4 | 2 | 128 | 33 | 1 | 11 | 1 | 3442 | 1679 | 0 | 3942 | 26 | 0 | 1684 |
| | Corner A & B | 0 | 0 | 6 | 2 | 0 | 0 | 74 | 68 | 0 | 0 | 15 | 3 | 0 | 0 | 1 | 1 | 0 | 0 | 11 | 13 |
| | Corner C & D | 0 | 0 | 0 | 5 | 0 | 0 | 4 | 4 | 0 | 0 | 28 | 0 | 0 | 0 | 0 | 1679 | 46 | 0 | 1875 | 0 |
| | Crosswalk (A-B-C) | 77 | 39 | 68 | 7 | 29 | 43 | 92 | 67 | 10 | 100 | 87 | 66 | 2 | 177 | 0 | 478 | 361 | 36 | 999 | 52 |
| | Crosswalk (C-D-A) | 5 | 63 | 60 | 18 | 16 | 71 | 69 | 30 | 50 | 131 | 130 | 49 | 2 | 980 | 1 | 786 | 908 | 56 | 1257 | 72 |
| ***Eleventh Ave & West 35th*** | Sidewalk A | 0 | 0 | 8 | 11 | 0 | 0 | 63 | 8 | 0 | 0 | 37 | 1 | | | | | | | | |
| | Sidewalk B | 130 | 170 | 1 | 4 | 57 | 57 | 7 | 15 | 64 | 18 | 1 | 13 | | | | | | | | |
| | Sidewalk C | 4 | 21 | 156 | 172 | 0 | 43 | 94 | 70 | 0 | 58 | 114 | 18 | | | | | | | | |
| | Sidewalk D | 82 | 7 | 0 | 0 | 82 | 3 | 0 | 0 | 176 | 1 | 0 | 0 | | | | | | | | |
| | Corner A & B | 0 | 0 | 0 | 0 | 0 | 0 | 0 | 0 | 0 | 0 | 0 | 0 | | | | | | | | |
| | Corner C & D | 0 | 0 | 0 | 0 | 0 | 0 | 0 | 0 | 0 | 0 | 0 | 0 | | | | | | | | |
| | Crosswalk (A-B-C) | 1 | 4 | 131 | 171 | 3 | 13 | 67 | 67 | 2 | 13 | 62 | 18 | | | | | | | | |
| | Crosswalk (C-D-A) | 6 | 47 | 0 | 1 | 3 | 70 | 0 | 0 | 1 | 110 | 1 | 0 | | | | | | | | |
| ***Eleventh Ave & West 36th*** | Sidewalk A | 0 | 0 | 10 | 10 | 0 | 0 | 71 | 1 | 0 | 0 | 40 | 0 | | | | | | | | |
| | Sidewalk B | 3 | 39 | 1 | 3 | 37 | 36 | 3 | 12 | 45 | 5 | 0 | 9 | | | | | | | | |
| | Sidewalk C | 1 | 3 | 203 | 712 | 0 | 8 | 82 | 82 | 0 | 9 | 132 | 95 | | | | | | | | |
| | Sidewalk D | 8 | 10 | 0 | 0 | 63 | 8 | 0 | 0 | 37 | 1 | 0 | 0 | | | | | | | | |
| | Corner A & B | 0 | 0 | 0 | 0 | 0 | 0 | 0 | 0 | 0 | 0 | 0 | 0 | | | | | | | | |
| | Corner C & D | 0 | 0 | 0 | 0 | 0 | 0 | 0 | 0 | 0 | 0 | 0 | 0 | | | | | | | | |
| | Crosswalk (A-B-C) | 1 | 3 | 4 | 42 | 0 | 8 | 41 | 40 | 0 | 9 | 46 | 5 | | | | | | | | |
| | Crosswalk (C-D-A) | 2 | 65 | 0 | 0 | 0 | 58 | 0 | 0 | 3 | 126 | 0 | 0 | | | | | | | | |

# Appendix S.5.2

**NET INCREMENTAL PEDESTRIAN VOLUMES (SIDEWALKS, CORNERS, AND CROSSWALKS)**
**2010 FUTURE WITH THE PROPOSED ACTION**

| Intersection | Elements | Weekday AM Peak 15-Min. | | | | Weekday MD Peak 15-Min. | | | | Weekday PM Peak 15-Min. | | | | Special Events Evening Peak 15-Min. | | | | Special Events Sunday Peak 15-Min. | | | |
|---|---|---|---|---|---|---|---|---|---|---|---|---|---|---|---|---|---|---|---|---|---|
| *Eleventh Ave & West 37th* | Sidewalk A | 0 | 0 | 12 | 13 | 0 | 0 | 85 | 1 | 0 | 0 | 49 | 1 | | | | | | | | |
| | Sidewalk B | 2 | 15 | 2 | 27 | 25 | 25 | 6 | 14 | 18 | 3 | 28 | 10 | | | | | | | | |
| | Sidewalk C | 1 | 3 | 3 | 40 | 0 | 8 | 31 | 32 | 0 | 9 | 46 | 4 | | | | | | | | |
| | Sidewalk D | 10 | 11 | 0 | 0 | 71 | 1 | 0 | 0 | 41 | 1 | 0 | 0 | | | | | | | | |
| | Corner A & B | 0 | 0 | 0 | 0 | 0 | 0 | 0 | 0 | 0 | 0 | 0 | 0 | | | | | | | | |
| | Corner C & D | 0 | 0 | 0 | 0 | 0 | 0 | 0 | 0 | 0 | 0 | 0 | 0 | | | | | | | | |
| | Crosswalk (A-B-C) | 1 | 3 | 3 | 40 | 0 | 8 | 31 | 32 | 0 | 9 | 46 | 4 | | | | | | | | |
| | Crosswalk (C-D-A) | 1 | 3 | 0 | 1 | 0 | 8 | 0 | 0 | 0 | 9 | 1 | 1 | | | | | | | | |
| *Eleventh Ave & West 38th* | Sidewalk A | 0 | 0 | 15 | 15 | 0 | 0 | 101 | 3 | 0 | 0 | 58 | 2 | | | | | | | | |
| | Sidewalk B | 1 | 3 | 2 | 15 | 16 | 16 | 6 | 14 | 3 | 2 | 15 | 10 | | | | | | | | |
| | Sidewalk C | 1 | 3 | 1 | 15 | 0 | 9 | 20 | 21 | 0 | 9 | 17 | 3 | | | | | | | | |
| | Sidewalk D | 12 | 13 | 0 | 0 | 85 | 1 | 0 | 0 | 49 | 1 | 0 | 0 | | | | | | | | |
| | Corner A & B | 0 | 0 | 0 | 0 | 0 | 0 | 0 | 0 | 0 | 0 | 0 | 0 | | | | | | | | |
| | Corner C & D | 0 | 0 | 0 | 0 | 0 | 0 | 0 | 0 | 0 | 0 | 0 | 0 | | | | | | | | |
| | Crosswalk (A-B-C) | 1 | 3 | 2 | 15 | 1 | 10 | 21 | 21 | 1 | 9 | 18 | 3 | | | | | | | | |
| | Crosswalk (C-D-A) | 1 | 3 | 0 | 1 | 0 | 9 | 0 | 0 | 0 | 9 | 2 | 1 | | | | | | | | |
| *Eleventh Ave & West 39th* | Sidewalk A | 0 | 0 | 17 | 16 | 0 | 0 | 115 | 2 | 0 | 0 | 64 | 2 | 0 | 0 | 8 | 129 | 0 | 0 | 205 | 11 |
| | Sidewalk B | 1 | 3 | 1 | 3 | 12 | 12 | 0 | 8 | 4 | 3 | 0 | 9 | 0 | 275 | 1 | 20 | 467 | 3 | 130 | 1 |
| | Sidewalk C | 1 | 2 | 1 | 3 | 0 | 9 | 12 | 12 | 0 | 9 | 4 | 3 | 1 | 13 | 0 | 307 | 206 | 2 | 660 | 3 |
| | Sidewalk D | 15 | 15 | 1 | -1 | 101 | 3 | 1 | 0 | 58 | 2 | 0 | 2 | 7 | 128 | 300 | 0 | 282 | 9 | 0 | 303 |
| | Corner A & B | 0 | 0 | 0 | 0 | 0 | 0 | 0 | 0 | 0 | 0 | 0 | 0 | 0 | 0 | 0 | 0 | 0 | 0 | 0 | 0 |
| | Corner C & D | 0 | 0 | 0 | 0 | 0 | 0 | 0 | 0 | 0 | 0 | 0 | 0 | 0 | 13 | 0 | 0 | 100 | 0 | 0 | 0 |
| | Crosswalk (A-B-C) | 1 | 3 | 1 | 3 | 0 | 8 | 12 | 12 | 0 | 9 | 4 | 3 | 1 | 1 | 0 | 294 | 64 | 1 | 533 | 3 |
| | Crosswalk (C-D-A) | 1 | 2 | 16 | 15 | 0 | 9 | 108 | 2 | 0 | 9 | 60 | 2 | 1 | 1 | 7 | 129 | 79 | 2 | 240 | 11 |
| *Eleventh Ave & West 40th* | Sidewalk A | 1 | -1 | 20 | 21 | 0 | 0 | 144 | 3 | -3 | 1 | 79 | 0 | | | | | | | | |
| | Sidewalk B | 1 | 2 | 3 | 10 | 6 | 6 | 0 | 36 | 3 | 3 | 0 | 33 | | | | | | | | |
| | Sidewalk C | 0 | 0 | 1 | 2 | 0 | 0 | 6 | 6 | 0 | 0 | 3 | 3 | | | | | | | | |
| | Sidewalk D | 17 | 16 | 0 | 0 | 115 | 2 | 0 | 0 | 64 | 2 | 0 | 0 | | | | | | | | |
| | Corner A & B | -1 | 1 | 0 | 0 | 0 | 0 | 0 | 0 | 1 | 0 | 0 | 0 | | | | | | | | |
| | Corner C & D | 0 | 0 | 0 | 0 | 0 | 0 | 0 | 0 | 0 | 0 | 0 | 0 | | | | | | | | |
| | Crosswalk (A-B-C) | 3 | 10 | 1 | 2 | 0 | 36 | 6 | 6 | 0 | 33 | 3 | 3 | | | | | | | | |
| | Crosswalk (C-D-A) | 0 | 0 | 17 | 16 | 0 | 0 | 115 | 2 | 0 | 0 | 63 | 2 | | | | | | | | |
| *Eleventh Ave & West 42nd* | Sidewalk A | 69 | -7 | 6 | 10 | 66 | 68 | 27 | 40 | -4 | 92 | 23 | 21 | 10 | 18 | 2 | 2 | 76 | 94 | 91 | 29 |
| | Sidewalk B | 4 | 6 | 64 | -8 | 9 | 25 | 36 | 45 | 5 | 17 | -18 | 76 | 1 | 86 | 9 | 24 | 69 | 8 | 109 | 50 |
| | Sidewalk C | 15 | 35 | 0 | 0 | 21 | 124 | 4 | 4 | 5 | 120 | 1 | 1 | 7 | 31 | 0 | 114 | 94 | 19 | 150 | 3 |
| | Sidewalk D | 0 | 1 | 0 | 0 | 8 | 8 | 0 | 0 | 4 | 0 | 0 | 0 | 1 | 1 | 0 | 0 | 95 | 9 | 0 | 0 |
| | Corner A & B | 3 | 3 | 0 | 0 | 17 | 17 | 0 | 0 | 9 | 9 | 0 | 0 | 1 | 1 | 0 | 0 | 25 | 25 | 0 | 0 |
| | Corner C & D | 0 | 0 | 0 | 0 | 3 | 3 | 0 | 0 | 0 | 0 | 0 | 0 | 0 | 23 | 0 | 0 | 23 | 1 | 0 | 0 |
| | Crosswalk (A-B-C) | 65 | -10 | 5 | 10 | 41 | 54 | 11 | 24 | -16 | 89 | 13 | 16 | 10 | 18 | 2 | 92 | 57 | 59 | 129 | 7 |
| | Crosswalk (C-D-A) | 15 | 37 | 5 | 29 | 11 | 128 | 17 | 39 | 2 | 119 | 17 | 22 | 7 | 8 | 3 | 3 | 67 | 16 | 92 | 14 |
| *Tenth Ave & W. 29th St* | Sidewalk A | 0 | 0 | 7 | -5 | 0 | 0 | 13 | 18 | 0 | 0 | 0 | 11 | | | | | | | | |
| | Sidewalk B | 1 | 0 | -1 | -3 | 6 | 5 | 3 | 2 | 1 | 0 | 1 | -2 | | | | | | | | |
| | Sidewalk C | -1 | 1 | 0 | -3 | 3 | 1 | 6 | 6 | 1 | -2 | 0 | 1 | | | | | | | | |
| | Sidewalk D | 1 | 0 | 2 | -3 | 7 | 6 | 0 | 0 | 1 | 2 | 0 | 2 | | | | | | | | |
| | Corner A & B | 0 | 0 | 1 | 0 | 0 | 0 | 0 | 0 | 0 | 0 | 0 | 1 | | | | | | | | |
| | Corner C & D | 0 | 0 | 0 | 0 | 0 | 0 | 0 | 0 | 0 | 0 | 0 | 0 | | | | | | | | |
| | Crosswalk (A-B-C) | -2 | 0 | 0 | -4 | 3 | 2 | 6 | 6 | 0 | -3 | 0 | -1 | | | | | | | | |
| | Crosswalk (C-D-A) | -3 | -1 | 5 | -9 | 3 | 0 | 10 | 14 | 0 | -5 | 1 | 8 | | | | | | | | |
| *Tenth Ave & W. 30th St* | Sidewalk A | 0 | 19 | 0 | 4 | 7 | 14 | 41 | 44 | 36 | 11 | 17 | 4 | 1 | 3102 | 0 | 1968 | 3666 | 2 | 2075 | 1 |
| | Sidewalk B | 4 | 3 | 1 | 6 | 14 | 12 | 11 | 14 | 6 | 4 | 12 | 7 | 0 | 353 | 0 | 635 | 418 | 0 | 1094 | 1 |
| | Sidewalk C | 0 | 4 | 1 | -2 | 10 | 12 | 13 | 11 | 4 | 6 | 2 | 2 | 0 | 131 | 15 | 0 | 132 | 1 | 0 | 23 |
| | Sidewalk D | 8 | 2 | 0 | 4 | 19 | 25 | 4 | 2 | 2 | 12 | 7 | 5 | 1 | 2 | 1 | 1 | 3 | 5 | 75 | 2 |
| | Corner A & B | 0 | 8 | 1 | 0 | 2 | 7 | 0 | 0 | 15 | 4 | 0 | 1 | 0 | 1968 | 0 | 0 | 2072 | 0 | 0 | 0 |
| | Corner C & D | 0 | 0 | 0 | 0 | 0 | 0 | 0 | 0 | 0 | 0 | 0 | 0 | 0 | 0 | 0 | 0 | 0 | 0 | 0 | 0 |
| | Crosswalk (A-B-C) | 0 | 7 | 3 | -3 | 11 | 16 | 13 | 12 | 15 | 7 | 2 | 4 | 0 | 1134 | 145 | -1 | 1587 | 1 | 0 | 75 |
| | Crosswalk (C-D-A) | 0 | 3 | 4 | -7 | 10 | 11 | 29 | 31 | 2 | 6 | 2 | 6 | 0 | 0 | 0 | 1 | 80 | 1 | 3 | 9 |
| *Tenth Ave & W. 31st St* | Sidewalk A | 0 | 0 | 9 | -2 | 0 | 0 | 69 | 65 | 0 | 0 | 11 | 11 | 0 | 0 | 729 | 29 | 0 | 0 | 28 | 781 |
| | Sidewalk B | 11 | 4 | 1 | 14 | 15 | 14 | 12 | 17 | 7 | 14 | 21 | 9 | 0 | 668 | 0 | 1478 | 713 | 55 | 1621 | 2 |
| | Sidewalk C | 1 | 6 | 4 | -2 | 11 | 14 | 13 | 12 | 10 | 3 | 4 | 5 | 0 | 874 | 0 | 353 | 949 | 1 | 402 | 0 |
| | Sidewalk D | 0 | 9 | 0 | 0 | 41 | 44 | 0 | 0 | 17 | 4 | 0 | 0 | 0 | 1968 | 0 | 0 | 2075 | 1 | 0 | 0 |
| | Corner A & B | 0 | 0 | 7 | 0 | 0 | 0 | 2 | 1 | 0 | 0 | 1 | 9 | 0 | 0 | 0 | 0 | 0 | 0 | 0 | 55 |
| | Corner C & D | 0 | 0 | 0 | 0 | 0 | 0 | 0 | 0 | 0 | 0 | 0 | 0 | 0 | 59 | 0 | 0 | 85 | 0 | 0 | 0 |
| | Crosswalk (A-B-C) | 0 | 11 | 4 | -2 | 11 | 17 | 13 | 12 | 16 | 9 | 2 | 4 | 0 | 2065 | 0 | 80 | 2203 | 1 | 77 | 0 |
| | Crosswalk (C-D-A) | 0 | 5 | 0 | 0 | 11 | 13 | 0 | 0 | 8 | 2 | 0 | 0 | 0 | 602 | 0 | 0 | 624 | 1 | 0 | 0 |
| *Tenth Ave & W. 33rd St* | Sidewalk A | 5 | 71 | 18 | 2 | 16 | 27 | 68 | 66 | 101 | 31 | 10 | 20 | 10 | 821 | 0 | 149 | 1004 | 26 | 157 | 9 |
| | Sidewalk B | 15 | 3 | 5 | 66 | 22 | 20 | 12 | 26 | 12 | 15 | 90 | 29 | 0 | 159 | 2 | 651 | 145 | 5 | 746 | 19 |
| | Sidewalk C | 1 | 72 | 11 | 2 | 15 | 26 | 21 | 21 | 118 | 25 | 7 | 15 | 16 | 2351 | 3 | 673 | 2389 | 33 | 720 | 65 |
| | Sidewalk D | 11 | 19 | 6 | 60 | 69 | 65 | 13 | 28 | 46 | 12 | 108 | 30 | 729 | 29 | 15 | 2560 | 30 | 781 | 2519 | 29 |
| | Corner A & B | 0 | 0 | 3 | 0 | 0 | 0 | 2 | 0 | 0 | 0 | 5 | 2 | 0 | 89 | 96 | 0 | 92 | 0 | 4 | 94 |
| | Corner C & D | 0 | 0 | 5 | 1 | 0 | 0 | 2 | 1 | 0 | 0 | 3 | 7 | 0 | 9 | 729 | 0 | 8 | 0 | 0 | 773 |
| | Crosswalk (A-B-C) | 4 | 67 | 15 | 4 | 12 | 26 | 22 | 20 | 93 | 30 | 8 | 15 | 5 | 695 | 3 | 122 | 872 | 22 | 26 | 8 |
| | Crosswalk (C-D-A) | 1 | 69 | 23 | 3 | 15 | 23 | 68 | 69 | 115 | 22 | 10 | 28 | 17 | 1837 | 4 | 30 | 1750 | 32 | 34 | 15 |
| *Tenth Ave & W. 34th St* | Sidewalk A | 11 | 135 | 3 | 24 | 153 | 156 | 12 | 9 | 197 | 39 | 32 | 2 | 5 | 162 | 0 | 96 | 210 | 23 | 193 | 5 |
| | Sidewalk B | 3 | 5 | 6 | 97 | 11 | 8 | 27 | 44 | 12 | 1 | 102 | 32 | 2 | 55 | 2 | 228 | 125 | 8 | 124 | 10 |
| | Sidewalk C | 7 | 99 | 15 | 1 | 71 | 88 | 29 | 27 | 129 | 43 | 12 | 16 | 9 | 461 | 0 | 159 | 400 | 26 | 146 | 6 |
| | Sidewalk D | 19 | 3 | 13 | 117 | 73 | 72 | 85 | 88 | 10 | 21 | 198 | 46 | 0 | 149 | 53 | 394 | 158 | 11 | 371 | 29 |
| | Corner A & B | 1 | 24 | 2 | 1 | 10 | 9 | 3 | 0 | 28 | 2 | 4 | 0 | 1 | 48 | 0 | 0 | 95 | 1 | 1 | 2 |
| | Corner C & D | 0 | 0 | 3 | 1 | 0 | 1 | 0 | 0 | 2 | 0 | 2 | 3 | 0 | 113 | 0 | 0 | 82 | 0 | 1 | 1 |
| | Crosswalk (A-B-C) | 9 | 104 | 7 | 3 | 72 | 76 | 29 | 39 | 160 | 35 | 9 | 55 | 5 | 171 | 1 | 113 | 160 | 17 | 99 | 11 |
| | Crosswalk (C-D-A) | 12 | 110 | 11 | 2 | 84 | 88 | 74 | 71 | 190 | 46 | 10 | 12 | 52 | 437 | 1 | 106 | 373 | 28 | 156 | 12 |
| *Tenth Ave & W. 35th St* | Sidewalk A | 3 | 75 | 5 | 25 | 5 | 24 | 134 | 134 | 35 | 19 | 31 | 10 | | | | | | | | |
| | Sidewalk B | 1 | 9 | 5 | 91 | 33 | 33 | 7 | 25 | 12 | 2 | 53 | 21 | | | | | | | | |
| | Sidewalk C | 8 | 122 | 3 | 6 | 73 | 117 | 4 | 0 | 74 | 56 | 12 | 0 | | | | | | | | |
| | Sidewalk D | 3 | 24 | 17 | 148 | 6 | 3 | 244 | 293 | 32 | 2 | 102 | 81 | | | | | | | | |
| | Corner A & B | 0 | 0 | 0 | 0 | 0 | 0 | 0 | 0 | 0 | 0 | 0 | 0 | | | | | | | | |
| | Corner C & D | 0 | 1 | 0 | 0 | 0 | 0 | 1 | 0 | 1 | 0 | 1 | 0 | | | | | | | | |
| | Crosswalk (A-B-C) | 4 | 87 | 2 | 13 | 6 | 25 | 33 | 33 | 49 | 21 | 16 | 3 | | | | | | | | |
| | Crosswalk (C-D-A) | 10 | 132 | 7 | 37 | 106 | 152 | 141 | 141 | 84 | 65 | 45 | 12 | | | | | | | | |

# Appendix S.5.2

**NET INCREMENTAL PEDESTRIAN VOLUMES (SIDEWALKS, CORNERS, AND CROSSWALKS)**
**2010 FUTURE WITH THE PROPOSED ACTION**

| Intersection | Elements | Weekday AM Peak 15-Min. | | | | Weekday MD Peak 15-Min. | | | | Weekday PM Peak 15-Min. | | | | Special Events Evening Peak 15-Min. | | | | Special Events Sunday Peak 15-Min. | | | |
|---|---|---|---|---|---|---|---|---|---|---|---|---|---|---|---|---|---|---|---|---|---|
| *Tenth Ave & W. 36th St* | Sidewalk A | 1 | 3 | 5 | 20 | 3 | 11 | 104 | 104 | 0 | 10 | 24 | 8 | | | | | | | | |
| | Sidewalk B | 1 | 5 | 1 | 4 | 27 | 26 | 9 | 18 | 7 | 3 | 1 | 10 | | | | | | | | |
| | Sidewalk C | 1 | 4 | 1 | 10 | 10 | 18 | 27 | 27 | 2 | 9 | 12 | 2 | | | | | | | | |
| | Sidewalk D | 6 | 23 | 1 | 3 | 127 | 127 | 0 | 8 | 30 | 10 | 0 | 9 | | | | | | | | |
| | Corner A & B | 0 | 0 | 0 | 0 | 0 | 0 | 0 | 0 | 0 | 0 | 0 | 0 | | | | | | | | |
| | Corner C & D | 0 | 0 | 0 | 0 | 0 | 0 | 0 | 0 | 0 | 0 | 0 | 0 | | | | | | | | |
| | Crosswalk (A-B-C) | 1 | 5 | 1 | 4 | 10 | 18 | 27 | 26 | 3 | 10 | 5 | 2 | | | | | | | | |
| | Crosswalk (C-D-A) | 1 | 4 | 5 | 22 | 10 | 18 | 117 | 117 | 2 | 9 | 28 | 9 | | | | | | | | |
| *Tenth Ave & W. 37th St* | Sidewalk A | 1 | 3 | 2 | 8 | 6 | 14 | 75 | 75 | 1 | 10 | 11 | 6 | | | | | | | | |
| | Sidewalk B | 3 | 15 | 3 | 5 | 31 | 31 | 16 | 24 | 20 | 5 | 3 | 11 | | | | | | | | |
| | Sidewalk C | 3 | 5 | 1 | 5 | 13 | 22 | 21 | 21 | 3 | 11 | 6 | 3 | | | | | | | | |
| | Sidewalk D | 4 | 19 | 1 | 3 | 99 | 99 | 0 | 8 | 25 | 8 | 0 | 9 | | | | | | | | |
| | Corner A & B | 0 | 1 | 1 | 1 | 0 | 0 | 4 | 3 | 1 | 0 | 2 | 1 | | | | | | | | |
| | Corner C & D | 0 | 0 | 0 | 0 | 0 | 0 | 0 | 0 | 0 | 0 | 0 | 0 | | | | | | | | |
| | Crosswalk (A-B-C) | 1 | 10 | 2 | 9 | 14 | 22 | 25 | 25 | 9 | 11 | 11 | 4 | | | | | | | | |
| | Crosswalk (C-D-A) | 1 | 8 | 4 | 15 | 10 | 19 | 89 | 88 | 5 | 10 | 19 | 6 | | | | | | | | |
| *Tenth Ave & W. 38th St* | Sidewalk A | 1 | 2 | 2 | 5 | 4 | 12 | 42 | 42 | 0 | 9 | 7 | 5 | | | | | | | | |
| | Sidewalk B | 3 | 6 | 2 | 4 | 35 | 35 | 11 | 20 | 9 | 8 | 2 | 10 | | | | | | | | |
| | Sidewalk C | 2 | 4 | 2 | 3 | 14 | 22 | 25 | 25 | 3 | 11 | 5 | 4 | | | | | | | | |
| | Sidewalk D | 3 | 8 | 1 | 2 | 64 | 64 | 0 | 9 | 11 | 6 | 1 | 9 | | | | | | | | |
| | Corner A & B | 0 | 1 | 1 | 1 | 0 | 0 | 3 | 3 | 1 | 0 | 2 | 1 | | | | | | | | |
| | Corner C & D | 0 | 0 | 0 | 0 | -1 | -1 | 0 | 0 | 0 | 0 | 0 | 0 | | | | | | | | |
| | Crosswalk (A-B-C) | 1 | 4 | 3 | 5 | 11 | 19 | 29 | 28 | 1 | 9 | 7 | 6 | | | | | | | | |
| | Crosswalk (C-D-A) | 2 | 4 | 2 | 7 | 10 | 18 | 55 | 55 | 2 | 10 | 9 | 5 | | | | | | | | |
| *Tenth Ave & W. 39th St* | Sidewalk A | 1 | 2 | 1 | 2 | 0 | 8 | 12 | 12 | 0 | 9 | 4 | 4 | | | | | | | | |
| | Sidewalk B | 4 | 7 | 2 | 4 | 36 | 36 | 11 | 20 | 11 | 9 | 2 | 10 | | | | | | | | |
| | Sidewalk C | 2 | 5 | 3 | 5 | 13 | 22 | 31 | 31 | 4 | 11 | 9 | 8 | | | | | | | | |
| | Sidewalk D | 2 | 5 | 1 | 2 | 33 | 32 | 0 | 8 | 8 | 5 | 0 | 8 | | | | | | | | |
| | Corner A & B | 0 | 0 | 0 | 1 | 0 | 0 | 2 | 2 | 0 | 0 | 1 | 1 | | | | | | | | |
| | Corner C & D | 0 | 0 | 0 | 0 | 0 | 0 | 0 | 0 | 0 | 0 | 0 | 0 | | | | | | | | |
| | Crosswalk (A-B-C) | 1 | 3 | 4 | 7 | 9 | 17 | 34 | 34 | 1 | 9 | 11 | 10 | | | | | | | | |
| | Crosswalk (C-D-A) | 1 | 4 | 2 | 4 | 10 | 18 | 23 | 22 | 2 | 9 | 5 | 5 | | | | | | | | |
| *Tenth Ave & W. 40th St* | Sidewalk A | 4 | 11 | 1 | 3 | 1 | 37 | 5 | 6 | 0 | 34 | 4 | 3 | | | | | | | | |
| | Sidewalk B | 11 | 11 | 5 | 10 | 36 | 35 | 2 | 22 | 71 | 14 | 2 | 49 | | | | | | | | |
| | Sidewalk C | 2 | 6 | 4 | 6 | 3 | 20 | 29 | 30 | 1 | 43 | 11 | 9 | | | | | | | | |
| | Sidewalk D | 1 | 2 | 0 | 0 | 6 | 5 | 0 | 0 | 3 | 4 | 0 | 0 | | | | | | | | |
| | Corner A & B | 0 | 1 | 4 | 3 | 0 | 0 | 3 | 3 | 1 | 0 | 31 | 2 | | | | | | | | |
| | Corner C & D | 0 | 0 | 0 | 0 | 0 | 0 | 0 | 0 | 0 | 0 | 0 | 0 | | | | | | | | |
| | Crosswalk (A-B-C) | 2 | 8 | 8 | 8 | 1 | 29 | 40 | 32 | 0 | 26 | 47 | 10 | | | | | | | | |
| | Crosswalk (C-D-A) | 1 | 2 | 3 | 3 | 0 | 8 | 14 | 5 | 0 | 7 | 10 | 4 | | | | | | | | |
| *Tenth Ave & W. 41st St* | Sidewalk A | 6 | 13 | 0 | 1 | 19 | 38 | 1 | 1 | 9 | 24 | 1 | 1 | | | | | | | | |
| | Sidewalk B | 17 | 34 | 10 | 9 | 77 | 79 | 9 | 26 | 38 | 92 | 63 | 21 | | | | | | | | |
| | Sidewalk C | 6 | 7 | 11 | 11 | 7 | 24 | 38 | 37 | 4 | 20 | 72 | 14 | | | | | | | | |
| | Sidewalk D | 2 | 3 | 2 | 6 | 7 | 7 | 0 | 17 | 4 | 3 | 0 | 15 | | | | | | | | |
| | Corner A & B | 0 | 0 | 2 | 9 | 0 | 0 | 8 | 9 | 0 | 0 | 5 | 63 | | | | | | | | |
| | Corner C & D | 0 | 0 | 0 | 0 | 0 | 0 | 0 | 0 | 0 | 0 | 0 | 0 | | | | | | | | |
| | Crosswalk (A-B-C) | 8 | 16 | 13 | 16 | 25 | 43 | 45 | 44 | 13 | 27 | 77 | 17 | | | | | | | | |
| | Crosswalk (C-D-A) | 1 | 5 | 1 | 3 | 0 | 16 | 6 | 7 | 0 | 15 | 4 | 4 | | | | | | | | |
| *Tenth Ave & W. 42nd St* | Sidewalk A | 63 | -9 | 2 | 1 | 34 | 48 | 13 | 13 | -19 | 79 | 4 | 4 | | | | | | | | |
| | Sidewalk B | 7 | 5 | 74 | 61 | 58 | 57 | 29 | 57 | 13 | 15 | 26 | 98 | | | | | | | | |
| | Sidewalk C | 75 | 230 | 8 | 9 | 130 | 218 | 9 | 6 | 195 | 181 | 23 | 6 | | | | | | | | |
| | Sidewalk D | 0 | 0 | 16 | 35 | 4 | 4 | 26 | 124 | 1 | 1 | 5 | 117 | | | | | | | | |
| | Corner A & B | 1 | 1 | 0 | 0 | 3 | 3 | 0 | 0 | 2 | 2 | 0 | 0 | | | | | | | | |
| | Corner C & D | 0 | 0 | 0 | 0 | 0 | 0 | 0 | 0 | 0 | 0 | 0 | 0 | | | | | | | | |
| | Crosswalk (A-B-C) | 62 | -7 | 10 | 21 | 32 | 50 | 67 | 74 | -20 | 81 | 21 | 22 | | | | | | | | |
| | Crosswalk (C-D-A) | 17 | 22 | 3 | 3 | 36 | 130 | 9 | 13 | 7 | 118 | 5 | 6 | | | | | | | | |
| *Dyer Ave & W. 42nd St* | Sidewalk A | 74 | 58 | 0 | 0 | 28 | 55 | 0 | 0 | 26 | 97 | 0 | 0 | | | | | | | | |
| | Sidewalk B | 0 | 0 | 74 | 58 | 0 | 0 | 28 | 55 | 0 | 0 | 26 | 97 | | | | | | | | |
| | Sidewalk C | 79 | 261 | 0 | 0 | 102 | 192 | 0 | 0 | 213 | 172 | 0 | 0 | | | | | | | | |
| | Sidewalk D | 0 | 0 | 79 | 261 | 0 | 0 | 102 | 192 | 0 | 0 | 213 | 172 | | | | | | | | |
| | Corner A & B | 0 | 0 | 0 | 0 | 0 | 0 | 0 | 0 | 0 | 0 | 0 | 0 | | | | | | | | |
| | Corner C & D | 0 | 0 | 0 | 0 | 0 | 0 | 0 | 0 | 0 | 0 | 0 | 0 | | | | | | | | |
| | Crosswalk (A-B-C) | 0 | 0 | 0 | 0 | 0 | 0 | 0 | 0 | 0 | 0 | 0 | 0 | | | | | | | | |
| | Crosswalk (C-D-A) | 79 | 261 | 0 | 0 | 102 | 192 | 0 | 0 | 213 | 172 | 0 | 0 | | | | | | | | |
| *Ninth Ave & W. 30th St* | Sidewalk A | 0 | 6 | -2 | 0 | 8 | 12 | 7 | 5 | 12 | 7 | 1 | -2 | 0 | 635 | 0 | 228 | 1096 | 3 | 254 | 8 |
| | Sidewalk B | -2 | 0 | 0 | 4 | 7 | 6 | 1 | 4 | 1 | -2 | 8 | 6 | -1 | 179 | 0 | 227 | 246 | 7 | 486 | 4 |
| | Sidewalk C | 0 | 4 | -1 | -2 | 0 | 2 | 7 | 5 | 3 | 6 | 0 | -3 | 0 | 0 | 65 | -1 | 190 | 3 | 9 | 32 |
| | Sidewalk D | -1 | -1 | 1 | 1 | 7 | 5 | 7 | 9 | 0 | -2 | 4 | 6 | 65 | -1 | 0 | 131 | 10 | 32 | 132 | 3 |
| | Corner A & B | 0 | 0 | 0 | 0 | 0 | 0 | 0 | 0 | 0 | 0 | 0 | 0 | 0 | 25 | 0 | 0 | 31 | 0 | 0 | 0 |
| | Corner C & D | 0 | 0 | 0 | -3 | 0 | 0 | 0 | 0 | 0 | 0 | 0 | 0 | 0 | 0 | 65 | 0 | 1 | 1 | 0 | 23 |
| | Crosswalk (A-B-C) | 0 | 6 | -2 | -1 | 1 | 4 | 6 | 5 | 9 | 7 | 1 | -2 | 0 | 407 | -1 | 0 | 839 | 3 | 8 | 122 |
| | Crosswalk (C-D-A) | 0 | 3 | -2 | -1 | 0 | 2 | 7 | 5 | 3 | 5 | 0 | -1 | 0 | 65 | 0 | 0 | 98 | 2 | 9 | 21 |
| *Ninth Ave & W. 31st St* | Sidewalk A | 0 | 10 | 0 | 11 | 8 | 13 | 12 | 11 | 14 | 8 | 1 | -2 | 0 | 1478 | 0 | 40 | 1567 | 3 | 43 | 5 |
| | Sidewalk B | -1 | 1 | 0 | 115 | 13 | 13 | 2 | 8 | 4 | -1 | 14 | 8 | 0 | 520 | 0 | 1737 | 560 | 4 | 1873 | 35 |
| | Sidewalk C | 0 | 7 | -1 | 1 | 0 | 4 | 13 | 12 | 6 | 6 | 2 | -2 | 0 | 450 | -1 | 179 | 549 | 4 | 250 | 11 |
| | Sidewalk D | 0 | 1 | 0 | 6 | 13 | 12 | 8 | 10 | 1 | 0 | 9 | 2 | 0 | 215 | 0 | 875 | 236 | 12 | 950 | 2 |
| | Corner A & B | 0 | 0 | 0 | 0 | 0 | 0 | 0 | 0 | 0 | 0 | 0 | 0 | 0 | 0 | 0 | 0 | 0 | 0 | 4 | 4 |
| | Corner C & D | 0 | 0 | 0 | 0 | 0 | 0 | 0 | 0 | 0 | 0 | 0 | 0 | 0 | 57 | 0 | 0 | 107 | 0 | 0 | 0 |
| | Crosswalk (A-B-C) | 1 | 11 | -1 | 2 | 2 | 7 | 13 | 13 | 15 | 8 | 3 | -1 | 0 | 1807 | 0 | 451 | 1936 | 18 | 490 | 11 |
| | Crosswalk (C-D-A) | 1 | 5 | 0 | 1 | 1 | 4 | 14 | 12 | 8 | 2 | 3 | -1 | 0 | 721 | -1 | 369 | 784 | 3 | 403 | 13 |
| *Ninth Ave & W. 33rd St* | Sidewalk A | 4 | 66 | 4 | 19 | 9 | 22 | 22 | 21 | 90 | 29 | 8 | 5 | 2 | 632 | 0 | 187 | 702 | 20 | 130 | 19 |
| | Sidewalk B | 2 | 3 | 0 | 128 | 21 | 20 | 2 | 12 | 8 | 1 | 16 | 20 | 0 | 173 | 0 | 489 | 171 | 19 | 474 | 15 |
| | Sidewalk C | 2 | 98 | 0 | 1 | 4 | 19 | 20 | 19 | 172 | 34 | 4 | -1 | 2 | 2645 | -1 | 520 | 2874 | 61 | 557 | 1 |
| | Sidewalk D | 0 | 0 | 0 | 203 | 19 | 18 | 10 | 22 | 2 | -1 | 104 | 24 | 38 | 40 | 1 | 2338 | 39 | 2 | 2331 | 24 |
| | Corner A & B | 0 | 1 | 2 | 0 | 0 | 1 | 2 | 0 | 0 | 2 | 4 | 1 | 0 | 57 | 51 | 0 | 16 | 0 | 3 | 52 |
| | Corner C & D | 0 | 1 | 0 | 0 | 1 | 2 | 0 | 0 | 2 | 1 | 0 | 0 | 0 | 509 | 38 | 0 | 547 | 0 | 0 | 0 |
| | Crosswalk (A-B-C) | 5 | 64 | 36 | 65 | 3 | 13 | 22 | 20 | 88 | 25 | 12 | 70 | 2 | 560 | 0 | 104 | 613 | 19 | 42 | 24 |
| | Crosswalk (C-D-A) | -1 | 62 | 4 | 73 | 3 | 16 | 22 | 20 | 103 | 27 | 9 | 3 | 1 | 2227 | 0 | 114 | 2315 | 41 | 45 | 20 |

# Appendix S.5.2

**NET INCREMENTAL PEDESTRIAN VOLUMES (SIDEWALKS, CORNERS, AND CROSSWALKS)**
**2010 FUTURE WITH THE PROPOSED ACTION**

| Intersection | Elements | Weekday AM Peak 15-Min. | | | | Weekday MD Peak 15-Min. | | | | Weekday PM Peak 15-Min. | | | | Special Events Evening Peak 15-Min. | | | | Special Events Sunday Peak 15-Min. | | | |
|---|---|---|---|---|---|---|---|---|---|---|---|---|---|---|---|---|---|---|---|---|---|
| ***Ninth Ave & W. 34th St*** | Sidewalk A | 6 | 93 | 3 | 11 | 24 | 40 | 11 | 7 | 101 | 32 | 8 | 0 | 3 | 228 | 0 | 99 | 126 | 12 | 51 | 15 |
| | Sidewalk B | 1 | 2 | 6 | 91 | 11 | 7 | 11 | 28 | 7 | -2 | 103 | 31 | 3 | 13 | 4 | 375 | 18 | 19 | 144 | 7 |
| | Sidewalk C | 5 | 90 | 3 | 17 | 11 | 31 | 28 | 27 | 105 | 37 | 8 | 1 | 2 | 473 | 0 | 173 | 536 | 20 | 169 | 16 |
| | Sidewalk D | 4 | 3 | 6 | 99 | 28 | 28 | 67 | 84 | 8 | 5 | 129 | 43 | 1 | 188 | 9 | 461 | 130 | 20 | 402 | 27 |
| | Corner A & B | 0 | 2 | 2 | 1 | 7 | 7 | 3 | 0 | 2 | 0 | 4 | 0 | 0 | 50 | 0 | 0 | 38 | 1 | 2 | 3 |
| | Corner C & D | 0 | 1 | 6 | 1 | 0 | 1 | 29 | 27 | 2 | 1 | 10 | 7 | 0 | 104 | 42 | 2 | 119 | 0 | 4 | 5 |
| | Crosswalk (A-B-C) | 7 | 92 | 8 | 8 | 18 | 35 | 5 | 1 | 101 | 32 | 10 | -2 | 5 | 267 | 2 | 158 | 144 | 9 | 74 | 17 |
| | Crosswalk (C-D-A) | 6 | 94 | 3 | 9 | 40 | 57 | 4 | 1 | 119 | 38 | 9 | 0 | 5 | 469 | 3 | 138 | 443 | 23 | 74 | 17 |
| ***Ninth Ave & W. 37th St*** | Sidewalk A | 2 | 4 | 1 | 4 | 10 | 19 | 24 | 25 | 2 | 11 | 4 | 3 | | | | | | | | |
| | Sidewalk B | -1 | 2 | 2 | 4 | 21 | 21 | 4 | 13 | 3 | 0 | 2 | 10 | | | | | | | | |
| | Sidewalk C | 2 | 4 | 0 | 7 | 2 | 10 | 21 | 22 | 2 | 10 | 4 | 0 | | | | | | | | |
| | Sidewalk D | 2 | 2 | 2 | 5 | 19 | 20 | 9 | 18 | 3 | 1 | 3 | 10 | | | | | | | | |
| | Corner A & B | 1 | 0 | 0 | 0 | 2 | 2 | 0 | 0 | 1 | 1 | 0 | 0 | | | | | | | | |
| | Corner C & D | 0 | 0 | 0 | 0 | 0 | 0 | 0 | 0 | 0 | 0 | 0 | 0 | | | | | | | | |
| | Crosswalk (A-B-C) | 3 | 4 | -1 | 6 | 4 | 13 | 21 | 21 | 3 | 11 | 3 | 0 | | | | | | | | |
| | Crosswalk (C-D-A) | 2 | 5 | 1 | 4 | 3 | 11 | 20 | 20 | 2 | 10 | 3 | 1 | | | | | | | | |
| ***Ninth Ave & W. 38th St*** | Sidewalk A | 1 | 3 | -1 | -1 | 7 | 15 | 0 | 0 | 1 | 9 | -5 | -4 | | | | | | | | |
| | Sidewalk B | 2 | 3 | 10 | 5 | 16 | 17 | 5 | 14 | 3 | 2 | 5 | 19 | | | | | | | | |
| | Sidewalk C | 6 | 5 | 0 | 5 | 5 | 14 | 15 | 15 | 3 | 15 | 2 | -1 | | | | | | | | |
| | Sidewalk D | 17 | 2 | 1 | 4 | 23 | 23 | 9 | 17 | 7 | 19 | 2 | 10 | | | | | | | | |
| | Corner A & B | 0 | -1 | 0 | 0 | -5 | -5 | 0 | 0 | -2 | -2 | 0 | 0 | | | | | | | | |
| | Corner C & D | 0 | 0 | 0 | 0 | 0 | 0 | 0 | 0 | 0 | 0 | 0 | 0 | | | | | | | | |
| | Crosswalk (A-B-C) | 7 | 4 | 6 | 5 | 1 | 10 | 19 | 19 | 3 | 14 | 6 | 6 | | | | | | | | |
| | Crosswalk (C-D-A) | 12 | 5 | 5 | 0 | 7 | 16 | 4 | 4 | 6 | 20 | -3 | 3 | | | | | | | | |
| ***Ninth Ave & W. 39th St*** | Sidewalk A | 2 | 3 | 1 | 0 | 8 | 16 | 7 | 7 | 1 | 10 | 0 | 0 | | | | | | | | |
| | Sidewalk B | 4 | 2 | 0 | 2 | 11 | 10 | 0 | 9 | -1 | 4 | 0 | 8 | | | | | | | | |
| | Sidewalk C | 9 | 2 | 2 | 4 | 5 | 16 | 12 | 12 | -1 | 14 | 3 | 2 | | | | | | | | |
| | Sidewalk D | -6 | -3 | 1 | 4 | -5 | -5 | 8 | 17 | -7 | -9 | 2 | 10 | | | | | | | | |
| | Corner A & B | 0 | 0 | 0 | 0 | 0 | 0 | 0 | 0 | 0 | 0 | 0 | 0 | | | | | | | | |
| | Corner C & D | -1 | 1 | 0 | -1 | 0 | 1 | 0 | -2 | 0 | -2 | -1 | -1 | | | | | | | | |
| | Crosswalk (A-B-C) | 1 | 3 | 4 | 2 | 0 | 9 | 13 | 11 | 1 | 8 | 0 | 4 | | | | | | | | |
| | Crosswalk (C-D-A) | -1 | 2 | -1 | 0 | -2 | 6 | 3 | 4 | 0 | 7 | -1 | -2 | | | | | | | | |
| ***Ninth Ave & W. 42nd St*** | Sidewalk A | 74 | 58 | 6 | 3 | 28 | 55 | 10 | 10 | 26 | 97 | 6 | 8 | | | | | | | | |
| | Sidewalk B | 1 | 1 | 75 | 59 | 13 | 13 | 31 | 66 | 2 | 3 | 33 | 107 | | | | | | | | |
| | Sidewalk C | 53 | 172 | 1 | 2 | 48 | 120 | 9 | 9 | 140 | 125 | 0 | 2 | | | | | | | | |
| | Sidewalk D | -1 | 0 | 79 | 261 | 6 | 6 | 102 | 192 | 1 | 0 | 213 | 172 | | | | | | | | |
| | Corner A & B | 0 | 0 | 0 | 0 | 0 | 0 | 0 | 0 | 0 | 1 | 0 | 0 | | | | | | | | |
| | Corner C & D | 1 | 0 | 1 | 1 | 1 | 0 | 9 | 9 | -2 | 0 | 2 | 2 | | | | | | | | |
| | Crosswalk (A-B-C) | 75 | 54 | 2 | 2 | 36 | 63 | 7 | 15 | 33 | 101 | 2 | 10 | | | | | | | | |
| | Crosswalk (C-D-A) | 55 | 177 | 65 | 94 | 63 | 143 | 34 | 45 | 144 | 135 | 78 | 73 | | | | | | | | |
| ***Eighth Ave & W. 30th St*** | Sidewalk A | 1 | 5 | -2 | -1 | 1 | 4 | 0 | -2 | 8 | 6 | 0 | -4 | 0 | 228 | -1 | 104 | 489 | 5 | 127 | 19 |
| | Sidewalk B | 1 | 1 | 1 | 3 | 1 | 1 | 1 | 2 | 2 | 1 | 5 | 6 | 0 | 95 | 0 | 27 | 246 | 38 | 36 | 4 |
| | Sidewalk C | 1 | 4 | 1 | 0 | 1 | 2 | 0 | 0 | 5 | 6 | 0 | 0 | 0 | 0 | 0 | 0 | 6 | 2 | 29 | 166 |
| | Sidewalk D | -2 | 0 | 1 | 2 | 0 | -2 | 0 | 2 | 0 | -4 | 3 | 5 | 0 | -1 | 0 | 0 | 14 | 151 | 192 | 5 |
| | Corner A & B | 0 | 0 | 0 | 0 | 0 | 0 | 0 | 0 | 0 | 0 | 0 | 0 | 0 | 105 | 0 | 0 | 109 | 2 | 2 | 2 |
| | Corner C & D | 0 | 0 | 0 | 0 | 0 | 0 | 0 | 0 | 0 | 0 | 0 | 0 | 0 | 0 | 0 | 0 | 0 | 0 | 0 | 69 |
| | Crosswalk (A-B-C) | 1 | 5 | 1 | 0 | 1 | 3 | 1 | 0 | 8 | 7 | 0 | 1 | 0 | 123 | 0 | 0 | 314 | 7 | 34 | 102 |
| | Crosswalk (C-D-A) | 1 | 4 | -3 | -1 | 0 | 2 | 0 | -2 | 4 | 6 | 0 | -4 | 0 | 0 | -1 | 0 | 77 | 4 | 16 | 83 |
| ***Eighth Ave & W. 31st St*** | Sidewalk A | 0 | 8 | -3 | 0 | 1 | 6 | 0 | -2 | 11 | 7 | 1 | -3 | 0 | 1308 | -1 | 43 | 1410 | 37 | 49 | 6 |
| | Sidewalk B | 1 | 0 | 0 | 100 | 0 | 0 | 0 | 5 | 0 | 1 | 6 | 6 | 0 | 54 | 0 | 617 | 138 | 87 | 628 | 16 |
| | Sidewalk C | 0 | 4 | 1 | 1 | 1 | 3 | 0 | 1 | 5 | 6 | 1 | 1 | 0 | 116 | 0 | 95 | 352 | 5 | 234 | 43 |
| | Sidewalk D | -2 | 0 | 0 | 6 | 0 | -2 | 1 | 5 | 1 | -3 | 6 | 7 | -1 | 104 | 0 | 450 | 132 | 24 | 551 | 6 |
| | Corner A & B | 0 | 0 | 0 | 0 | 0 | 0 | 0 | 0 | 0 | 0 | 0 | 0 | 0 | 0 | 0 | 0 | 0 | 0 | 0 | 0 |
| | Corner C & D | 0 | 0 | 0 | 0 | 0 | 0 | 0 | 0 | 0 | 0 | 0 | 0 | 0 | 23 | 0 | 0 | 137 | 0 | 2 | 2 |
| | Crosswalk (A-B-C) | 0 | 7 | 0 | 1 | 1 | 6 | 0 | 1 | 9 | 7 | 1 | 1 | 0 | 1054 | 0 | 261 | 1141 | 49 | 323 | 53 |
| | Crosswalk (C-D-A) | 0 | 5 | -2 | 1 | 0 | 3 | 0 | -1 | 6 | 7 | 2 | -3 | 0 | 322 | 0 | 219 | 438 | 13 | 239 | 12 |
| ***Eighth Ave & W. 33rd St*** | Sidewalk A | 0 | 28 | 2 | 27 | 2 | 12 | 1 | 0 | 17 | 20 | 5 | 1 | 1 | 406 | 0 | 101 | 383 | 17 | 122 | 20 |
| | Sidewalk B | 2 | 5 | 2 | 49 | 2 | 2 | 3 | 6 | 5 | 34 | 13 | 7 | 1 | 122 | 41 | 147 | 186 | 64 | 124 | 1 |
| | Sidewalk C | 0 | 5 | 14 | 7 | 1 | 3 | 0 | 2 | 8 | 5 | 1 | 60 | 0 | 222 | 0 | 55 | 244 | 24 | 140 | 90 |
| | Sidewalk D | -1 | 0 | -3 | 217 | 0 | -2 | 3 | 10 | 0 | -4 | 99 | 16 | -1 | 44 | 1 | 2001 | 46 | 3 | 2164 | 46 |
| | Corner A & B | 0 | 0 | 0 | 0 | 0 | 0 | 0 | 0 | 0 | 0 | 1 | 0 | 0 | 0 | 0 | 0 | 0 | 0 | 0 | 1 |
| | Corner C & D | 0 | 0 | 0 | 0 | 0 | 0 | 0 | 0 | 0 | 0 | 0 | 0 | 0 | 45 | 0 | 0 | 44 | 0 | 0 | 0 |
| | Crosswalk (A-B-C) | 2 | 24 | 11 | 6 | 2 | 9 | 5 | 2 | 15 | 16 | 13 | 35 | 41 | 259 | 0 | 28 | 251 | 19 | 107 | 81 |
| | Crosswalk (C-D-A) | 3 | 26 | 5 | 20 | 2 | 11 | 3 | 1 | 43 | 19 | 6 | 2 | 1 | 1305 | 0 | 28 | 1431 | 51 | 41 | 17 |
| ***Eighth Ave & W. 34th St*** | Sidewalk A | 6 | 86 | 2 | 23 | 11 | 28 | 6 | 1 | 102 | 32 | 7 | 0 | 2 | 168 | 0 | 18 | 141 | 6 | 32 | 19 |
| | Sidewalk B | 1 | 5 | 3 | 58 | 4 | 1 | 4 | 22 | 7 | 57 | 34 | 24 | 0 | 20 | 1 | 115 | 60 | 49 | 106 | 3 |
| | Sidewalk C | 4 | 42 | 26 | 19 | 5 | 33 | 3 | 4 | 67 | 42 | 7 | 60 | 2 | 552 | 1 | 123 | 594 | 29 | 183 | 62 |
| | Sidewalk D | 3 | 1 | 5 | 108 | 2 | 0 | 11 | 31 | 5 | 2 | 104 | 37 | 0 | 101 | 2 | 460 | 119 | 17 | 501 | 22 |
| | Corner A & B | 0 | 0 | 1 | 1 | 0 | 0 | 4 | 0 | 0 | 0 | 4 | 0 | 0 | 0 | 1 | 0 | -1 | -1 | 1 | 2 |
| | Corner C & D | 0 | 0 | 2 | 19 | 0 | 0 | 0 | 0 | 1 | 0 | 1 | 1 | 0 | 110 | 0 | 0 | 117 | 4 | 1 | 1 |
| | Crosswalk (A-B-C) | 6 | 71 | 15 | 24 | 10 | 27 | 7 | 2 | 87 | 29 | 12 | 66 | 2 | 141 | 0 | 32 | 122 | 6 | 90 | 59 |
| | Crosswalk (C-D-A) | 3 | 54 | 4 | 59 | 8 | 30 | 5 | 1 | 64 | 39 | 10 | 0 | 2 | 479 | 0 | 27 | 515 | 26 | 43 | 19 |
| ***Eighth Ave & W. 37th St*** | Sidewalk A | 2 | 3 | 1 | 7 | 3 | 11 | 2 | 2 | 1 | 10 | 3 | 2 | | | | | | | | |
| | Sidewalk B | 0 | 1 | 1 | 3 | 0 | 1 | 1 | 9 | 2 | 1 | 1 | 9 | | | | | | | | |
| | Sidewalk C | 1 | 4 | 1 | 2 | 1 | 9 | 1 | 1 | 1 | 9 | 2 | 2 | | | | | | | | |
| | Sidewalk D | 1 | 1 | 2 | 4 | 2 | 3 | 1 | 10 | 2 | 2 | 1 | 10 | | | | | | | | |
| | Corner A & B | 0 | 0 | 0 | 0 | 0 | 0 | 0 | 0 | 0 | 0 | 0 | 0 | | | | | | | | |
| | Corner C & D | 0 | 0 | 0 | 0 | 0 | 0 | 0 | 0 | 0 | 0 | 0 | 0 | | | | | | | | |
| | Crosswalk (A-B-C) | 1 | 3 | 0 | 2 | 2 | 10 | 1 | 1 | 2 | 10 | 2 | 1 | | | | | | | | |
| | Crosswalk (C-D-A) | 2 | 4 | 0 | 7 | 1 | 9 | 2 | 2 | 2 | 10 | 3 | 2 | | | | | | | | |
| ***Eighth Ave & W. 38th St*** | Sidewalk A | 10 | 4 | 5 | 7 | 5 | 13 | 4 | 4 | 5 | 20 | 3 | 5 | | | | | | | | |
| | Sidewalk B | 5 | 1 | 6 | 4 | 4 | 4 | 4 | 12 | 2 | 6 | 3 | 14 | | | | | | | | |
| | Sidewalk C | 2 | 4 | 1 | 1 | 1 | 9 | 2 | 2 | 1 | 9 | 2 | 1 | | | | | | | | |
| | Sidewalk D | 1 | 1 | 6 | 4 | 4 | 3 | 4 | 12 | 2 | 2 | 3 | 15 | | | | | | | | |
| | Corner A & B | 4 | 0 | 0 | 0 | 1 | 1 | 0 | 0 | 1 | 4 | 0 | 0 | | | | | | | | |
| | Corner C & D | 0 | 0 | 0 | 1 | 0 | 0 | 0 | 0 | 0 | 0 | 1 | 0 | | | | | | | | |
| | Crosswalk (A-B-C) | 6 | 4 | 4 | 2 | 2 | 11 | 3 | 4 | 2 | 14 | 2 | 5 | | | | | | | | |
| | Crosswalk (C-D-A) | 5 | 4 | 1 | 7 | 4 | 12 | 5 | 4 | 4 | 14 | 4 | 2 | | | | | | | | |

# Appendix S.5.2

**NET INCREMENTAL PEDESTRIAN VOLUMES (SIDEWALKS, CORNERS, AND CROSSWALKS)**
**2010 FUTURE WITH THE PROPOSED ACTION**

| Intersection | Elements | Weekday AM Peak 15-Min. | | | | Weekday MD Peak 15-Min. | | | | Weekday PM Peak 15-Min. | | | | Special Events Evening Peak 15-Min. | | | | Special Events Sunday Peak 15-Min. | | | |
|---|---|---|---|---|---|---|---|---|---|---|---|---|---|---|---|---|---|---|---|---|---|
| *Eighth Ave & W. 39th St* | Sidewalk A | 0 | 2 | 12 | -1 | -1 | 7 | 8 | 10 | 0 | 8 | 0 | 18 | | | | | | | | |
| | Sidewalk B | 10 | -3 | 5 | 1 | 6 | 6 | 2 | 10 | -1 | 11 | -1 | 12 | | | | | | | | |
| | Sidewalk C | 4 | 3 | 5 | 2 | 3 | 12 | 6 | 6 | 2 | 12 | 3 | 6 | | | | | | | | |
| | Sidewalk D | 4 | 2 | 22 | -13 | 6 | 6 | 10 | 20 | 3 | 6 | -6 | 36 | | | | | | | | |
| | Corner A & B | -1 | -1 | 0 | 0 | -1 | -1 | 0 | 0 | -1 | -1 | 0 | 0 | | | | | | | | |
| | Corner C & D | 0 | 0 | 0 | 0 | 0 | 0 | 0 | 0 | 0 | 0 | 0 | 0 | | | | | | | | |
| | Crosswalk (A-B-C) | 5 | -1 | 8 | -3 | 2 | 11 | 6 | 6 | -2 | 14 | 0 | 9 | | | | | | | | |
| | Crosswalk (C-D-A) | 8 | -2 | 19 | -4 | 4 | 13 | 12 | 14 | -1 | 17 | -1 | 24 | | | | | | | | |
| *Eighth Ave & W. 42nd St* | Sidewalk A | 75 | 55 | 1 | 1 | 29 | 65 | 6 | 6 | 33 | 107 | 2 | 2 | | | | | | | | |
| | Sidewalk B | 1 | 1 | 37 | 44 | 6 | 6 | 14 | 64 | 2 | 2 | 22 | 78 | | | | | | | | |
| | Sidewalk C | 32 | 85 | 1 | 0 | 15 | 66 | 2 | 2 | 64 | 77 | 0 | 1 | | | | | | | | |
| | Sidewalk D | 2 | -1 | 48 | 160 | 7 | 6 | 40 | 112 | 3 | 3 | 124 | 118 | | | | | | | | |
| | Corner A & B | 0 | 0 | 0 | 0 | 0 | 0 | 0 | 0 | 0 | 0 | 0 | 0 | | | | | | | | |
| | Corner C & D | 0 | 0 | 2 | 0 | 0 | 0 | 4 | 2 | 0 | 0 | 2 | 0 | | | | | | | | |
| | Crosswalk (A-B-C) | 35 | 39 | 2 | 4 | 13 | 54 | 5 | 16 | 22 | 69 | 2 | 11 | | | | | | | | |
| | Crosswalk (C-D-A) | 35 | 84 | 17 | 65 | 24 | 85 | 17 | 26 | 66 | 89 | 60 | 28 | | | | | | | | |
| *Seventh Ave & W. 31st St* | Sidewalk A | 0 | 5 | 0 | 0 | 1 | 4 | 0 | 0 | 6 | 6 | 0 | 0 | | | | | | | | |
| | Sidewalk B | 0 | 1 | 0 | 58 | 0 | 1 | 1 | 3 | 1 | 0 | 5 | 5 | | | | | | | | |
| | Sidewalk C | 0 | 3 | 0 | 1 | 0 | 3 | 0 | 0 | 3 | 5 | 0 | 0 | | | | | | | | |
| | Sidewalk D | 0 | 0 | 0 | 4 | 0 | 0 | 0 | 3 | 0 | 0 | 4 | 5 | | | | | | | | |
| | Corner A & B | 0 | 0 | 0 | 0 | 0 | 0 | 0 | 0 | 0 | 0 | 0 | 0 | | | | | | | | |
| | Corner C & D | 0 | 0 | 0 | 0 | 0 | 0 | 0 | 0 | 0 | 0 | 0 | 0 | | | | | | | | |
| | Crosswalk (A-B-C) | 0 | 5 | 0 | 1 | 0 | 4 | 0 | 0 | 5 | 6 | 1 | 0 | | | | | | | | |
| | Crosswalk (C-D-A) | 0 | 3 | 0 | 1 | 0 | 3 | 0 | 0 | 4 | 5 | 0 | 0 | | | | | | | | |
| *Seventh Ave & W. 33rd St* | Sidewalk A | 1 | 14 | 2 | 1 | 3 | 5 | 2 | 0 | 13 | 6 | 5 | 0 | | | | | | | | |
| | Sidewalk B | 0 | 0 | 0 | 54 | 1 | 0 | 1 | 3 | 1 | 0 | 7 | 5 | | | | | | | | |
| | Sidewalk C | 0 | 6 | 0 | 0 | 1 | 5 | 0 | 0 | 9 | 6 | 0 | 0 | | | | | | | | |
| | Sidewalk D | 0 | 0 | 0 | 116 | 0 | 0 | 1 | 4 | 0 | 0 | 8 | 5 | | | | | | | | |
| | Corner A & B | 1 | 11 | 0 | 0 | 2 | 1 | 0 | 0 | 4 | 2 | 1 | 0 | | | | | | | | |
| | Corner C & D | 0 | 0 | 0 | 0 | 0 | 0 | 0 | 0 | 0 | 0 | 0 | 0 | | | | | | | | |
| | Crosswalk (A-B-C) | 0 | 5 | 1 | 26 | 1 | 3 | 0 | 0 | 7 | 5 | 1 | 0 | | | | | | | | |
| | Crosswalk (C-D-A) | 0 | 5 | 1 | 31 | 1 | 4 | 1 | 0 | 8 | 5 | 1 | 0 | | | | | | | | |
| *Seventh Ave & W. 34th St* | Sidewalk A | 2 | 27 | 2 | 3 | 3 | 23 | 4 | 0 | 33 | 22 | 5 | 0 | | | | | | | | |
| | Sidewalk B | 2 | 1 | 2 | 21 | 5 | 0 | 3 | 25 | 6 | 0 | 18 | 24 | | | | | | | | |
| | Sidewalk C | 2 | 13 | 0 | 1 | 3 | 25 | 1 | 0 | 18 | 24 | 1 | 0 | | | | | | | | |
| | Sidewalk D | 2 | 0 | 4 | 66 | 2 | 0 | 6 | 32 | 6 | 0 | 63 | 39 | | | | | | | | |
| | Corner A & B | 0 | 0 | 1 | 0 | 0 | 0 | 4 | 0 | 0 | 0 | 5 | 0 | | | | | | | | |
| | Corner C & D | 0 | 0 | 0 | 0 | 0 | 0 | 3 | 1 | 0 | 0 | 1 | 4 | | | | | | | | |
| | Crosswalk (A-B-C) | 2 | 20 | 1 | 2 | 3 | 24 | 4 | 1 | 25 | 24 | 7 | 0 | | | | | | | | |
| | Crosswalk (C-D-A) | 2 | 20 | 1 | 4 | 4 | 21 | 4 | 0 | 29 | 21 | 5 | -2 | | | | | | | | |
| *Sixth Ave & W. 33rd St* | Sidewalk A | 0 | 4 | 0 | 0 | 1 | 3 | 0 | 0 | 7 | 5 | 1 | 0 | | | | | | | | |
| | Sidewalk B | 0 | 0 | 0 | 4 | 0 | 0 | 1 | 4 | 0 | 0 | 7 | 5 | | | | | | | | |
| | Sidewalk C | 0 | 4 | 0 | 7 | 1 | 4 | 0 | 0 | 7 | 5 | 1 | 0 | | | | | | | | |
| | Sidewalk D | 1 | 0 | 0 | 60 | 0 | 0 | 1 | 5 | 1 | 0 | 8 | 6 | | | | | | | | |
| | Corner A & B | 0 | 0 | 0 | 0 | 0 | 0 | 0 | 0 | 0 | 0 | 0 | 0 | | | | | | | | |
| | Corner C & D | 0 | 0 | 0 | 7 | 0 | 0 | 0 | 0 | 0 | 0 | 0 | 0 | | | | | | | | |
| | Crosswalk (A-B-C) | 0 | 4 | 0 | 0 | 1 | 3 | 0 | 0 | 7 | 6 | 0 | 0 | | | | | | | | |
| | Crosswalk (C-D-A) | 0 | 4 | 0 | 0 | 1 | 4 | 0 | 0 | 7 | 6 | 0 | 0 | | | | | | | | |
| *Sixth Ave & W. 34th St* | Sidewalk A | 2 | 13 | 0 | 0 | 2 | 24 | 0 | 0 | 18 | 24 | 0 | 0 | 0 | 0 | 0 | 0 | 0 | 0 | 0 | 0 |
| | Sidewalk B | 0 | 0 | 1 | 13 | 0 | 0 | 2 | 23 | 0 | 0 | 18 | 24 | 0 | 0 | 1 | 1 | 0 | 0 | 13 | 3 |
| | Sidewalk C | 1 | 13 | 0 | 0 | 2 | 23 | 0 | 0 | 18 | 24 | 0 | 0 | 1 | 1 | 0 | 0 | 13 | 3 | 0 | 0 |
| | Sidewalk D | 0 | 0 | 2 | 13 | 0 | 0 | 2 | 23 | 0 | 0 | 18 | 24 | 0 | 0 | 0 | 0 | 0 | 0 | 0 | 0 |
| | Corner A & B | 0 | 0 | 0 | 0 | 0 | 0 | 0 | 0 | 0 | 0 | 0 | 0 | 0 | 0 | 0 | 0 | 0 | 0 | 0 | 0 |
| | Corner C & D | 0 | 0 | 0 | 0 | 0 | 0 | 0 | 0 | 0 | 0 | 0 | 0 | 0 | 0 | 0 | 0 | 0 | 0 | 0 | 0 |
| | Crosswalk (A-B-C) | 2 | 13 | 0 | 0 | 2 | 23 | 0 | 0 | 18 | 24 | 0 | 0 | 1 | 1 | 0 | 0 | 14 | 3 | 0 | 0 |
| | Crosswalk (C-D-A) | 1 | 13 | 0 | 0 | 2 | 23 | 0 | 0 | 18 | 24 | 0 | 0 | 1 | 1 | 0 | 0 | 13 | 3 | 0 | 0 |
| *Broadway & W. 34th St* | Sidewalk A | 2 | 14 | 0 | 0 | 3 | 25 | 0 | 0 | 18 | 24 | 0 | 0 | 1 | 34 | 0 | 9 | 43 | 3 | 19 | 11 |
| | Sidewalk B | 0 | 0 | 2 | 13 | 0 | 0 | 2 | 23 | 0 | 0 | 18 | 24 | 0 | 0 | 0 | 0 | 0 | 0 | 0 | 0 |
| | Sidewalk C | 2 | 13 | 0 | 0 | 2 | 23 | 0 | 0 | 18 | 24 | 0 | 0 | 0 | 0 | 0 | 0 | 0 | 0 | 0 | 0 |
| | Sidewalk D | 0 | 0 | 2 | 19 | 1 | 0 | 2 | 24 | 0 | 0 | 19 | 24 | 0 | 0 | 1 | 24 | 12 | 11 | 35 | 5 |
| | Corner A & B | 0 | 0 | 0 | 0 | 0 | 0 | 0 | 0 | 0 | 0 | 0 | 0 | 0 | 10 | 0 | 0 | 8 | 0 | 0 | 0 |
| | Corner C & D | 0 | 0 | 0 | 0 | 0 | 0 | 0 | 0 | 0 | 0 | 0 | 0 | 0 | 0 | 0 | 0 | 0 | 0 | 0 | 0 |
| | Crosswalk (A-B-C) | 2 | 12 | 0 | 0 | 2 | 23 | 0 | 0 | 18 | 24 | 0 | 0 | 1 | 1 | 0 | 0 | 13 | 3 | 0 | 0 |
| | Crosswalk (C-D-A) | 2 | 13 | 0 | 0 | 3 | 23 | 0 | 0 | 18 | 23 | 0 | 0 | 1 | 1 | 0 | 0 | 13 | 3 | 11 | 11 |
| *Blvd & W. 33rd St* | Sidewalk A | 4 | 22 | 89 | 15 | 7 | 26 | 24 | 53 | 29 | 34 | 7 | 137 | 1 | 681 | 19 | 69 | 847 | 20 | 65 | 43 |
| | Sidewalk B | 33 | 4 | 7 | 72 | 8 | 9 | 22 | 33 | 5 | 74 | 102 | 32 | 3 | 56 | 10 | 822 | 53 | 16 | 1005 | 27 |
| | Sidewalk C | 6 | 60 | 0 | 0 | 17 | 31 | 0 | 0 | 108 | 30 | 0 | 0 | 14 | 2559 | 0 | 0 | 2519 | 29 | 0 | 0 |
| | Sidewalk D | 0 | 0 | 0 | 26 | 0 | 0 | 5 | 22 | 0 | 0 | 34 | 28 | 0 | 0 | 0 | 3048 | 0 | 0 | 2970 | 16 |
| | Corner A & B | 0 | 0 | 17 | 2 | 3 | 3 | 8 | 8 | 0 | 0 | 2 | 36 | 0 | 0 | 2 | 3 | 0 | 0 | 4 | 8 |
| | Corner C & D | 0 | 0 | 0 | 0 | 0 | 0 | 0 | 0 | 0 | 0 | 0 | 0 | 0 | 0 | 0 | 0 | 0 | 0 | 0 | 0 |
| | Crosswalk (A-B-C) | 4 | 53 | 16 | 5 | 13 | 23 | 0 | 2 | 62 | 28 | 7 | 41 | 7 | 555 | 2 | 317 | 743 | 23 | 304 | 8 |
| | Crosswalk (C-D-A) | 2 | 17 | 48 | 12 | 0 | 0 | 13 | 37 | 35 | 1 | 9 | 88 | 6 | 340 | 13 | 226 | 159 | 6 | 216 | 33 |
| *Blvd & W. 34th St* | Sidewalk A | 27 | 319 | 307 | 26 | 201 | 200 | 112 | 125 | 432 | 61 | 34 | 423 | 9 | 204 | 3 | 7 | 272 | 28 | 12 | 26 |
| | Sidewalk B | 1 | 0 | 12 | 149 | 1 | -1 | 164 | 168 | 1 | 0 | 212 | 40 | 2 | 1 | 5 | 233 | 6 | 3 | 275 | 23 |
| | Sidewalk C | 13 | 117 | 34 | 6 | 91 | 95 | 14 | 14 | 198 | 46 | 4 | 74 | 53 | 394 | 3 | 56 | 371 | 30 | 54 | 16 |
| | Sidewalk D | 57 | 8 | 1 | 90 | 31 | 31 | 13 | 81 | 8 | 84 | 46 | 150 | 53 | 58 | 2 | 504 | 53 | 22 | 502 | 93 |
| | Corner A & B | 0 | 0 | 1 | 0 | 0 | 0 | 2 | 0 | 0 | 0 | 1 | 0 | 0 | 0 | 0 | 0 | 0 | 0 | 0 | 0 |
| | Corner C & D | 0 | 0 | 0 | 0 | 0 | 0 | 0 | 0 | 0 | 0 | 0 | 0 | 0 | 47 | 0 | 0 | 45 | 0 | 0 | 0 |
| | Crosswalk (A-B-C) | 21 | 223 | 76 | 10 | 205 | 208 | 43 | 40 | 323 | 50 | 12 | 113 | 8 | 217 | 4 | 21 | 275 | 27 | 20 | 13 |
| | Crosswalk (C-D-A) | 26 | 373 | 403 | 33 | 90 | 90 | 105 | 122 | 486 | 68 | 46 | 533 | 74 | 378 | 4 | 24 | 365 | 47 | 22 | 31 |

# Appendix S.5.2

**NET INCREMENTAL PEDESTRIAN VOLUMES (SIDEWALKS, CORNERS, AND CROSSWALKS)**
**2025 FUTURE WITH THE PROPOSED ACTION**

| Intersection | Elements | Weekday AM Peak 15-Min. | | | | Weekday MD Peak 15-Min. | | | | Weekday PM Peak 15-Min. | | | | Special Events Evening Peak 15-Min. | | | | Special Events Sunday Peak 15-Min. | | | |
|---|---|---|---|---|---|---|---|---|---|---|---|---|---|---|---|---|---|---|---|---|---|
| ***Rt 9A & West 30th St*** | Sidewalk A | 0 | 0 | 0 | 2 | 0 | 0 | 1 | 2 | 0 | 0 | 4 | 0 | 0 | 0 | 0 | 0 | 0 | 0 | 0 | 0 |
| | Sidewalk B | 0 | 0 | 0 | 0 | 0 | 0 | 0 | 0 | 0 | 0 | 0 | 0 | 0 | 0 | 0 | 0 | 0 | 0 | 0 | 0 |
| | Sidewalk C | 0 | 0 | 0 | 0 | 0 | 0 | 0 | 0 | 0 | 0 | 0 | 0 | 0 | 0 | 0 | 0 | 0 | 0 | 0 | 0 |
| | Sidewalk D | 0 | 0 | 0 | 0 | 0 | 0 | 0 | 0 | 0 | 0 | 0 | 0 | 0 | 0 | 0 | 0 | 0 | 0 | 0 | 0 |
| | Corner A & B | 0 | 0 | 0 | 0 | 0 | 0 | 0 | 0 | 0 | 0 | 0 | 0 | 0 | 0 | 0 | 0 | 0 | 0 | 0 | 0 |
| | Corner C & D | 0 | 0 | 0 | 0 | 0 | 0 | 0 | 0 | 0 | 0 | 0 | 0 | 0 | 0 | 0 | 0 | 0 | 0 | 0 | 0 |
| | Crosswalk (A-B-C) | 0 | 0 | 2 | 0 | 0 | 0 | 2 | 1 | 0 | 0 | 0 | 4 | 0 | 0 | 435 | 0 | 0 | 0 | 0 | 422 |
| | Crosswalk (C-D-A) | 2 | 0 | 0 | 0 | 2 | 1 | 0 | 0 | 0 | 4 | 0 | 0 | 435 | 0 | 0 | 0 | 0 | 422 | 0 | 0 |
| ***Rt 9A & West 34th St*** | Sidewalk A | 0 | 0 | 0 | 3 | 0 | 0 | 1 | 3 | 0 | 0 | 8 | 0 | 0 | 0 | 0 | 957 | 0 | 0 | 1078 | 0 |
| | Sidewalk B | 0 | 3 | 1 | 0 | 1 | 2 | 1 | 1 | 6 | 0 | 0 | 2 | 0 | 696 | 139 | 0 | 676 | 0 | 0 | 135 |
| | Sidewalk C | 4 | 0 | 0 | 0 | 3 | 2 | 0 | 0 | 1 | 9 | 0 | 0 | 992 | 0 | 0 | 0 | 0 | 963 | 0 | 0 |
| | Sidewalk D | 0 | 2 | 0 | 0 | 1 | 2 | 0 | 0 | 4 | 0 | 0 | 0 | 0 | 435 | 0 | 0 | 422 | 0 | 0 | 0 |
| | Corner A & B | 0 | 0 | 0 | 1 | 0 | 0 | 0 | 0 | 0 | 0 | 1 | 0 | 0 | 0 | 0 | 139 | 0 | 0 | 135 | 0 |
| | Corner C & D | 0 | 0 | 0 | 0 | 0 | 0 | 0 | 0 | 0 | 0 | 0 | 0 | 0 | 0 | 0 | 0 | 0 | 0 | 0 | 0 |
| | Crosswalk (A-B-C) | 0 | 0 | 0 | 2 | 0 | 0 | 1 | 2 | 0 | 0 | 5 | 0 | 0 | 0 | 0 | 557 | 0 | 0 | 541 | 0 |
| | Crosswalk (C-D-A) | 2 | 0 | 0 | 0 | 2 | 1 | 0 | 0 | 0 | 4 | 0 | 0 | 435 | 0 | 0 | 0 | 0 | 422 | 0 | 0 |
| ***Rt 9A & West 39th St*** | Sidewalk A | 0 | 0 | 1 | 1 | 0 | 0 | 0 | 0 | 0 | 0 | 1 | 1 | | | | | | | | |
| | Sidewalk B | 0 | 0 | 0 | 0 | 0 | 0 | 0 | 0 | 0 | 0 | 0 | 0 | | | | | | | | |
| | Sidewalk C | 12 | 35 | 0 | 3 | 1 | 0 | 1 | 2 | 11 | 37 | 6 | 0 | | | | | | | | |
| | Sidewalk D | 0 | 3 | 0 | 0 | 1 | 3 | 0 | 0 | 8 | 0 | 0 | 0 | | | | | | | | |
| | Corner A & B | 0 | 0 | 0 | 0 | 0 | 0 | 0 | 0 | 0 | 0 | 0 | 0 | | | | | | | | |
| | Corner C & D | 0 | 0 | 0 | 0 | 0 | 0 | 0 | 0 | 0 | 0 | 0 | 0 | | | | | | | | |
| | Crosswalk (A-B-C) | 0 | 0 | 0 | 0 | 0 | 0 | 0 | 0 | 0 | 0 | 0 | 0 | | | | | | | | |
| | Crosswalk (C-D-A) | 36 | 33 | 1 | 1 | 18 | 1 | 0 | 0 | 47 | 43 | 1 | 1 | | | | | | | | |
| ***Rt 9A & West 40th St*** | Sidewalk A | 0 | 0 | 1 | 1 | 0 | 0 | 0 | 0 | 0 | 0 | 1 | 1 | | | | | | | | |
| | Sidewalk B | 0 | 0 | 0 | 0 | 0 | 0 | 0 | 0 | 0 | 0 | 0 | 0 | | | | | | | | |
| | Sidewalk C | 0 | 0 | 0 | 0 | 0 | 0 | 0 | 0 | 0 | 0 | 0 | 0 | | | | | | | | |
| | Sidewalk D | 1 | 1 | 0 | 0 | 0 | 0 | 0 | 0 | 1 | 1 | 0 | 0 | | | | | | | | |
| | Corner A & B | 0 | 0 | 0 | 0 | 0 | 0 | 0 | 0 | 0 | 0 | 0 | 0 | | | | | | | | |
| | Corner C & D | 0 | 0 | 0 | 0 | 0 | 0 | 0 | 0 | 0 | 0 | 0 | 0 | | | | | | | | |
| | Crosswalk (A-B-C) | 0 | 0 | 0 | 0 | 0 | 0 | 0 | 0 | 0 | 0 | 0 | 0 | | | | | | | | |
| | Crosswalk (C-D-A) | 0 | 0 | 1 | 1 | 0 | 0 | 0 | 0 | 0 | 0 | 1 | 1 | | | | | | | | |
| ***Rt 9A & West 42nd St*** | Sidewalk A | 0 | 0 | 1 | 0 | 0 | 0 | 0 | 0 | 0 | 0 | 0 | 1 | | | | | | | | |
| | Sidewalk B | -3 | -3 | -8 | 0 | -4 | -4 | -12 | -11 | 2 | 2 | 3 | -7 | | | | | | | | |
| | Sidewalk C | 2 | 2 | 0 | 0 | 2 | 2 | 0 | 0 | 2 | 2 | 0 | 0 | | | | | | | | |
| | Sidewalk D | 1 | 1 | 0 | 0 | 0 | 0 | 0 | 0 | 1 | 1 | 0 | 0 | | | | | | | | |
| | Corner A & B | 0 | 0 | -4 | -6 | 0 | 0 | -7 | -4 | 0 | 0 | 0 | 0 | | | | | | | | |
| | Corner C & D | 0 | 0 | 0 | 0 | 0 | 0 | 0 | 0 | 0 | 0 | 0 | 0 | | | | | | | | |
| | Crosswalk (A-B-C) | 0 | 1 | 2 | 5 | -1 | -1 | 3 | -1 | 1 | 0 | 2 | -4 | | | | | | | | |
| | Crosswalk (C-D-A) | 0 | 0 | 0 | 0 | 0 | 0 | 0 | 0 | 0 | 0 | 0 | 0 | | | | | | | | |
| ***Eleventh Ave & West 29th*** | Sidewalk A | 0 | 0 | 63 | 36 | 0 | 0 | 148 | 133 | 0 | 0 | 43 | 67 | | | | | | | | |
| | Sidewalk B | 93 | 46 | 2 | 27 | 201 | 199 | 24 | 37 | 50 | 107 | 57 | 24 | | | | | | | | |
| | Sidewalk C | 3 | 7 | 70 | 41 | 21 | 17 | 158 | 159 | 10 | 2 | 36 | 66 | | | | | | | | |
| | Sidewalk D | 51 | 36 | 0 | 0 | 138 | 129 | 0 | 0 | 32 | 40 | 0 | 0 | | | | | | | | |
| | Corner A & B | 0 | 0 | 15 | 2 | 0 | 0 | 27 | 20 | 0 | 0 | 13 | 30 | | | | | | | | |
| | Corner C & D | 0 | 0 | 0 | 0 | 0 | 0 | 0 | 0 | 0 | 0 | 0 | 0 | | | | | | | | |
| | Crosswalk (A-B-C) | 0 | 12 | 77 | 44 | 3 | 10 | 175 | 179 | 27 | 11 | 37 | 76 | | | | | | | | |
| | Crosswalk (C-D-A) | 0 | 0 | 51 | 36 | 0 | 0 | 138 | 129 | 0 | 0 | 32 | 40 | | | | | | | | |
| ***Eleventh Ave & West 30th*** | Sidewalk A | 0 | 12 | 38 | 10 | 3 | 10 | 97 | 82 | 27 | 11 | 25 | 47 | 0 | 0 | 1 | 2 | 509 | 0 | 8 | 13 |
| | Sidewalk B | 88 | 56 | 56 | 55 | 301 | 294 | 134 | 143 | 55 | 68 | 49 | 51 | -1 | 0 | 11 | 1140 | 9 | 20 | 1133 | 31 |
| | Sidewalk C | 8 | 8 | 106 | 58 | 26 | 32 | 257 | 256 | 6 | 16 | 58 | 117 | -1 | 37 | 49 | -1 | 71 | -2 | 17 | 92 |
| | Sidewalk D | 78 | 47 | 0 | 0 | 204 | 189 | 0 | 0 | 50 | 77 | 0 | 0 | 94 | 3 | 0 | 0 | 37 | 399 | 0 | 0 |
| | Corner A & B | 0 | 0 | 5 | 2 | 0 | 0 | 26 | 25 | 0 | 0 | 6 | 3 | 0 | 0 | 0 | 0 | 0 | 0 | 2 | 6 |
| | Corner C & D | 5 | 1 | 0 | 0 | 0 | 4 | 0 | 0 | 0 | 8 | 0 | 0 | 0 | 0 | 0 | 0 | 0 | 0 | 0 | 0 |
| | Crosswalk (A-B-C) | 21 | 33 | 109 | 75 | 57 | 64 | 332 | 319 | 46 | 23 | 71 | 93 | 4 | 1179 | 50 | 6 | 1180 | 14 | 58 | 134 |
| | Crosswalk (C-D-A) | 19 | 24 | 66 | 30 | 55 | 58 | 157 | 138 | 27 | 18 | 45 | 82 | 1 | 43 | 134 | 2 | 86 | 12 | 25 | 461 |
| ***Eleventh Ave & West 33rd*** | Sidewalk A | 0 | 2 | 67 | 57 | 0 | 2 | 99 | 132 | 0 | 3 | 86 | 74 | 0 | 51 | 5 | 3652 | 0 | 0 | 4488 | 43 |
| | Sidewalk B | 107 | 78 | 39 | 35 | 200 | 247 | 94 | 107 | 81 | 106 | 33 | 52 | 3 | 10 | 9 | 859 | 28 | 44 | 868 | 20 |
| | Sidewalk C | 49 | 80 | 106 | 109 | 243 | 209 | 293 | 331 | 96 | 61 | 123 | 107 | 2 | 1162 | 5 | 2 | 1601 | 27 | 22 | 29 |
| | Sidewalk D | 28 | 11 | 0 | 0 | 87 | 79 | 0 | 0 | 14 | 22 | 0 | 0 | 1 | 1 | 0 | 0 | 8 | 12 | 0 | 0 |
| | Corner A & B | 0 | 0 | 3 | 0 | 0 | 0 | 2 | 0 | 0 | 0 | 5 | 0 | 0 | 0 | 0 | 8 | 0 | 0 | 2 | 14 |
| | Corner C & D | 11 | 11 | 0 | 0 | 130 | 130 | 0 | 0 | 7 | 7 | 0 | 0 | 1 | 1 | 0 | 0 | 8 | 8 | 0 | 0 |
| | Crosswalk (A-B-C) | 19 | 29 | 115 | 74 | 63 | 60 | 178 | 242 | 41 | 37 | 81 | 132 | 1 | 859 | 3 | 1 | 587 | 11 | 286 | 30 |
| | Crosswalk (C-D-A) | 16 | 45 | 57 | 23 | 65 | 58 | 89 | 95 | 53 | 34 | 38 | 44 | 1 | 1160 | 1 | 1 | 1848 | 9 | 15 | 20 |
| ***Eleventh Ave & West 34th*** | Sidewalk A | 1 | 0 | 132 | 42 | 1 | 1 | 144 | 148 | 0 | 2 | 135 | 81 | 0 | 0 | 10 | 289 | 0 | 0 | 828 | 96 |
| | Sidewalk B | 160 | 109 | 66 | 29 | 304 | 302 | 195 | 202 | 99 | 136 | 22 | 73 | 6 | 882 | 2 | 229 | 1471 | 77 | 232 | 18 |
| | Sidewalk C | 8 | 80 | 118 | 112 | 87 | 134 | 251 | 290 | 54 | 109 | 144 | 116 | 0 | 675 | 77 | 11 | 567 | 54 | 42 | 73 |
| | Sidewalk D | 82 | 77 | 4 | 0 | 147 | 182 | 3 | 2 | 147 | 89 | 1 | 9 | 4 | 3912 | 992 | 0 | 5299 | 39 | 0 | 963 |
| | Corner A & B | 28 | 0 | 10 | 12 | 8 | 0 | 101 | 97 | 3 | 0 | 17 | 5 | 1 | 2 | 1 | 1 | 4 | 5 | 7 | 9 |
| | Corner C & D | 2 | 2 | 0 | 6 | 29 | 29 | 3 | 3 | 2 | 2 | 26 | 3 | -1 | -1 | 0 | 992 | -2 | -2 | 1154 | 0 |
| | Crosswalk (A-B-C) | 125 | 63 | 123 | 98 | 85 | 57 | 256 | 291 | 34 | 108 | 118 | 134 | 3 | 296 | 5 | 814 | 449 | 27 | 1265 | 79 |
| | Crosswalk (C-D-A) | 22 | 70 | 116 | 62 | 57 | 97 | 128 | 152 | 69 | 164 | 132 | 109 | 1 | 1479 | 3 | 1446 | 1751 | 40 | 2453 | 70 |
| ***Eleventh Ave & West 35th*** | Sidewalk A | 0 | 0 | 37 | 30 | 0 | 0 | 129 | 73 | 0 | 0 | 44 | 18 | | | | | | | | |
| | Sidewalk B | 283 | 293 | 84 | 62 | 310 | 301 | 132 | 133 | 99 | 90 | 36 | 38 | | | | | | | | |
| | Sidewalk C | 39 | 53 | 256 | 255 | 62 | 103 | 302 | 300 | 9 | 66 | 140 | 99 | | | | | | | | |
| | Sidewalk D | 133 | 42 | 0 | 0 | 144 | 148 | 0 | 0 | 135 | 82 | 0 | 0 | | | | | | | | |
| | Corner A & B | 0 | 0 | 34 | 38 | 0 | 0 | 69 | 69 | 0 | 0 | 12 | 9 | | | | | | | | |
| | Corner C & D | 4 | 4 | 0 | 0 | 27 | 27 | 0 | 0 | 3 | 3 | 0 | 0 | | | | | | | | |
| | Crosswalk (A-B-C) | 22 | 10 | 278 | 280 | 34 | 28 | 292 | 290 | 14 | 17 | 111 | 91 | | | | | | | | |
| | Crosswalk (C-D-A) | 23 | 40 | 18 | 18 | 33 | 73 | 62 | 62 | 14 | 92 | 11 | 12 | | | | | | | | |
| ***Eleventh Ave & West 36th*** | Sidewalk A | 0 | 0 | 74 | 24 | 0 | 0 | 127 | 47 | 0 | 0 | 55 | 36 | | | | | | | | |
| | Sidewalk B | 399 | 389 | 141 | 102 | 305 | 289 | 47 | 42 | 162 | 100 | 55 | 60 | | | | | | | | |
| | Sidewalk C | 178 | 188 | 584 | 1305 | 86 | 83 | 417 | 415 | 99 | 88 | 1042 | 311 | | | | | | | | |
| | Sidewalk D | 37 | 30 | 0 | 0 | 129 | 73 | 0 | 0 | 44 | 18 | 0 | 0 | | | | | | | | |
| | Corner A & B | 0 | 0 | 1 | 3 | 0 | 0 | 2 | 2 | 0 | 0 | 3 | 1 | | | | | | | | |
| | Corner C & D | 8 | 19 | 0 | 0 | 10 | 10 | 0 | 0 | 21 | 8 | 0 | 0 | | | | | | | | |
| | Crosswalk (A-B-C) | 85 | 7 | 452 | 460 | 32 | 16 | 319 | 314 | 13 | 15 | 178 | 142 | | | | | | | | |
| | Crosswalk (C-D-A) | 52 | 47 | 125 | 6 | 34 | 57 | 50 | 16 | 14 | 108 | 20 | 27 | | | | | | | | |

# Appendix S.5.2

**NET INCREMENTAL PEDESTRIAN VOLUMES (SIDEWALKS, CORNERS, AND CROSSWALKS)**
**2025 FUTURE WITH THE PROPOSED ACTION**

| Intersection | Elements | Weekday AM Peak 15-Min. | | | | Weekday MD Peak 15-Min. | | | | Weekday PM Peak 15-Min. | | | | Special Events Evening Peak 15-Min. | | | | Special Events Sunday Peak 15-Min. | | | |
|---|---|---|---|---|---|---|---|---|---|---|---|---|---|---|---|---|---|---|---|---|---|
| ***Eleventh Ave & West 37th*** | Sidewalk A | 0 | 0 | 31 | 21 | 0 | 0 | 112 | 28 | 0 | 0 | 59 | 10 | | | | | | | | |
| | Sidewalk B | 190 | 206 | 158 | 114 | 268 | 240 | 123 | 122 | 213 | 76 | 34 | 59 | | | | | | | | |
| | Sidewalk C | 24 | 28 | 294 | 308 | 21 | 29 | 279 | 250 | 19 | 23 | 240 | 91 | | | | | | | | |
| | Sidewalk D | 73 | 23 | 0 | 0 | 127 | 47 | 0 | 0 | 54 | 36 | 0 | 0 | | | | | | | | |
| | Corner A & B | 0 | 0 | 7 | 7 | 0 | 0 | 44 | 44 | 0 | 0 | 6 | 6 | | | | | | | | |
| | Corner C & D | 16 | 17 | 0 | 0 | 13 | 13 | 0 | 0 | 13 | 8 | 0 | 0 | | | | | | | | |
| | Crosswalk (A-B-C) | 33 | 9 | 300 | 297 | 21 | 24 | 284 | 251 | 9 | 37 | 228 | 87 | | | | | | | | |
| | Crosswalk (C-D-A) | 24 | 11 | 31 | 9 | 13 | 17 | 33 | 29 | 4 | 16 | 11 | 29 | | | | | | | | |
| ***Eleventh Ave & West 38th*** | Sidewalk A | 0 | 0 | 38 | 24 | 0 | 0 | 140 | 42 | 0 | 0 | 77 | 13 | | | | | | | | |
| | Sidewalk B | 67 | 104 | 30 | 28 | 211 | 177 | 130 | 138 | 231 | 41 | 19 | 31 | | | | | | | | |
| | Sidewalk C | 35 | 55 | 65 | 112 | 39 | 47 | 215 | 181 | 45 | 34 | 252 | 40 | | | | | | | | |
| | Sidewalk D | 31 | 21 | 0 | 0 | 112 | 28 | 0 | 0 | 59 | 10 | 0 | 0 | | | | | | | | |
| | Corner A & B | 0 | 0 | 12 | 15 | 0 | 0 | 52 | 52 | 0 | 0 | 8 | 8 | | | | | | | | |
| | Corner C & D | 13 | 31 | 0 | 0 | 17 | 16 | 0 | 0 | 29 | 9 | 0 | 0 | | | | | | | | |
| | Crosswalk (A-B-C) | 7 | 8 | 63 | 96 | 32 | 40 | 216 | 182 | 6 | 17 | 229 | 40 | | | | | | | | |
| | Crosswalk (C-D-A) | 9 | 16 | 9 | 9 | 18 | 27 | 19 | 19 | 7 | 20 | 7 | 8 | | | | | | | | |
| ***Eleventh Ave & West 39th*** | Sidewalk A | 0 | 0 | 34 | 77 | 0 | 0 | 161 | 60 | 0 | 0 | 78 | 21 | 0 | 0 | 11 | 10 | 0 | 0 | 154 | 23 |
| | Sidewalk B | 65 | 110 | 5 | 6 | 183 | 136 | 4 | 13 | 287 | 41 | 2 | 12 | 8 | 5 | 1 | 1 | 359 | 37 | 86 | 3 |
| | Sidewalk C | 21 | 57 | 71 | 185 | 19 | 27 | 176 | 141 | 56 | 29 | 338 | 42 | 3 | 265 | 7 | 241 | 388 | 12 | 691 | 32 |
| | Sidewalk D | 38 | 24 | 12 | 35 | 140 | 42 | 1 | 0 | 77 | 13 | 11 | 37 | 8 | 208 | 174 | 0 | 815 | 16 | 0 | 218 |
| | Corner A & B | 0 | 0 | 0 | 1 | 0 | 0 | 0 | 0 | 0 | 0 | 1 | 0 | 0 | 0 | 0 | 0 | 0 | 0 | 0 | 0 |
| | Corner C & D | 1 | 37 | 12 | 2 | 5 | 4 | 0 | 0 | 42 | 2 | 12 | 2 | 1 | 132 | 0 | 0 | 188 | 0 | 49 | 0 |
| | Crosswalk (A-B-C) | 28 | 6 | 65 | 133 | 10 | 12 | 183 | 142 | 5 | 11 | 286 | 44 | 1 | 1 | 8 | 5 | 47 | 4 | 398 | 38 |
| | Crosswalk (C-D-A) | 35 | 26 | 31 | 50 | 9 | 11 | 150 | 50 | 11 | 34 | 73 | 17 | 2 | 28 | 10 | 10 | 81 | 4 | 529 | 20 |
| ***Eleventh Ave & West 40th*** | Sidewalk A | 63 | 13 | 34 | 35 | 28 | 28 | 183 | 41 | 11 | 66 | 95 | 14 | | | | | | | | |
| | Sidewalk B | 53 | 99 | 26 | 77 | 143 | 96 | 36 | 122 | 279 | 33 | 8 | 156 | | | | | | | | |
| | Sidewalk C | 2 | 0 | 63 | 108 | 0 | 0 | 169 | 122 | 1 | 3 | 285 | 40 | | | | | | | | |
| | Sidewalk D | 34 | 77 | 0 | 0 | 161 | 60 | 0 | 0 | 78 | 21 | 0 | 0 | | | | | | | | |
| | Corner A & B | 0 | 0 | 1 | 4 | 0 | 0 | 2 | 2 | 0 | 0 | 4 | 0 | | | | | | | | |
| | Corner C & D | 1 | 1 | 0 | 0 | 0 | 0 | 0 | 0 | 1 | 1 | 0 | 0 | | | | | | | | |
| | Crosswalk (A-B-C) | 10 | 67 | 63 | 106 | 7 | 93 | 169 | 122 | 2 | 144 | 282 | 39 | | | | | | | | |
| | Crosswalk (C-D-A) | 1 | 0 | 32 | 77 | 0 | 0 | 161 | 60 | 0 | 2 | 77 | 19 | | | | | | | | |
| ***Eleventh Ave & West 42nd*** | Sidewalk A | -44 | -29 | 0 | 48 | -97 | -82 | 44 | 57 | 12 | 70 | 92 | 18 | 35 | 37 | 24 | 28 | -42 | -27 | 45 | 17 |
| | Sidewalk B | 44 | 63 | -9 | -22 | 92 | 108 | -27 | -17 | 49 | 46 | 4 | 30 | 7 | 6 | 15 | 11 | 268 | 34 | -9 | -8 |
| | Sidewalk C | 139 | 178 | 58 | 112 | 97 | 276 | 155 | 108 | 40 | 392 | 296 | 37 | 43 | 41 | 13 | 8 | 190 | 179 | 243 | 34 |
| | Sidewalk D | 15 | 27 | 3 | 3 | 50 | 51 | 3 | 3 | 33 | 16 | 2 | 2 | 10 | 8 | 0 | 0 | 176 | 15 | 2 | 37 |
| | Corner A & B | 0 | 0 | 2 | 5 | 0 | 0 | 0 | 0 | 0 | 0 | 3 | 1 | 4 | 4 | 1 | 1 | -2 | 0 | 1 | 1 |
| | Corner C & D | 20 | 12 | 0 | 0 | 41 | 14 | 0 | 0 | 113 | 10 | 0 | 0 | 2 | 1 | 0 | 0 | 20 | 8 | 35 | 0 |
| | Crosswalk (A-B-C) | 16 | -26 | 63 | 160 | -21 | -7 | 124 | 158 | 5 | 78 | 102 | 63 | 28 | 26 | 21 | 20 | 19 | 7 | 271 | 58 |
| | Crosswalk (C-D-A) | 69 | 133 | 21 | 76 | 32 | 224 | 69 | 92 | 6 | 333 | 92 | 33 | 34 | 29 | 29 | 29 | 167 | 138 | 150 | 27 |
| ***Tenth Ave & W. 29th St*** | Sidewalk A | 6 | 5 | 168 | 130 | 11 | 10 | 456 | 464 | 4 | 5 | 91 | 136 | | | | | | | | |
| | Sidewalk B | 58 | 41 | 10 | 19 | 124 | 122 | 47 | 45 | 31 | 49 | 18 | 6 | | | | | | | | |
| | Sidewalk C | 10 | 19 | 47 | 37 | 47 | 45 | 122 | 123 | 18 | 6 | 28 | 37 | | | | | | | | |
| | Sidewalk D | 127 | 101 | 8 | 5 | 342 | 342 | 11 | 12 | 73 | 97 | 4 | 8 | | | | | | | | |
| | Corner A & B | 4 | 3 | 6 | 1 | 10 | 11 | 1 | 1 | 2 | 3 | 0 | 7 | | | | | | | | |
| | Corner C & D | 0 | 0 | 0 | 0 | 0 | 0 | 0 | 0 | 0 | 0 | 0 | 0 | | | | | | | | |
| | Crosswalk (A-B-C) | 10 | 14 | 51 | 39 | 47 | 45 | 123 | 121 | 12 | 7 | 29 | 41 | | | | | | | | |
| | Crosswalk (C-D-A) | 8 | 13 | 149 | 116 | 47 | 43 | 399 | 404 | 12 | 3 | 82 | 120 | | | | | | | | |
| ***Tenth Ave & W. 30th St*** | Sidewalk A | 125 | 153 | 169 | 145 | 351 | 351 | 594 | 593 | 121 | 91 | 103 | 120 | 22 | 446 | 29 | 230 | 554 | 91 | 320 | 103 |
| | Sidewalk B | 76 | 41 | 73 | 88 | 95 | 96 | 254 | 255 | 39 | 85 | 64 | 51 | 2 | -4 | 3 | 23 | 14 | -10 | 74 | 43 |
| | Sidewalk C | 14 | 27 | 75 | 54 | 62 | 64 | 184 | 183 | 26 | 17 | 42 | 62 | -2 | -3 | 16 | -1 | 10 | -8 | 20 | 37 |
| | Sidewalk D | 184 | 144 | 8 | 13 | 518 | 526 | 16 | 13 | 102 | 149 | 15 | 10 | 3 | -2 | -1 | 4 | 56 | 43 | 18 | -12 |
| | Corner A & B | -1 | 3 | 11 | 2 | 0 | 3 | 1 | 1 | 6 | 1 | 2 | 12 | 10 | 1053 | 0 | 0 | 1072 | 0 | 3 | 1 |
| | Corner C & D | 0 | 0 | 0 | 0 | 0 | 0 | 0 | 0 | 0 | 0 | 0 | 0 | 0 | 0 | 0 | 0 | 0 | 0 | 0 | 0 |
| | Crosswalk (A-B-C) | 99 | 105 | 73 | 46 | 312 | 318 | 150 | 148 | 76 | 69 | 37 | 68 | 4 | 31 | 9 | -2 | 105 | 51 | 13 | 12 |
| | Crosswalk (C-D-A) | 26 | 31 | 209 | 169 | 99 | 100 | 626 | 630 | 23 | 24 | 119 | 162 | -2 | 4 | 7 | 1 | 35 | -1 | 78 | 71 |
| ***Tenth Ave & W. 31st St*** | Sidewalk A | 0 | 38 | 556 | 194 | 0 | 0 | 753 | 738 | 0 | 0 | 175 | 502 | 0 | 0 | 114 | 936 | 0 | 0 | 1046 | 242 |
| | Sidewalk B | 75 | 53 | 83 | 418 | 176 | 176 | 118 | 119 | 53 | 89 | 452 | 94 | 1 | 610 | 34 | 1757 | 629 | 9 | 2275 | 33 |
| | Sidewalk C | 37 | 64 | 95 | 57 | 108 | 121 | 152 | 154 | 60 | 41 | 47 | 98 | 3 | 21 | 5 | -2 | 23 | 19 | 13 | 5 |
| | Sidewalk D | 172 | 147 | 0 | 0 | 596 | 594 | 0 | 0 | 106 | 123 | 0 | 0 | 19 | 1055 | 0 | 0 | 1157 | 71 | 0 | 0 |
| | Corner A & B | 0 | 0 | 4 | 3 | 0 | 0 | 1 | 1 | 0 | 0 | 2 | 4 | 0 | 0 | 0 | 2 | 0 | 0 | 2 | 6 |
| | Corner C & D | 0 | 0 | 0 | 0 | 0 | 0 | 0 | 0 | 0 | 0 | 0 | 0 | -1 | -1 | 0 | 0 | -4 | -4 | 0 | 0 |
| | Crosswalk (A-B-C) | 81 | 417 | 95 | 64 | 201 | 201 | 175 | 177 | 454 | 90 | 49 | 100 | 27 | 1776 | 7 | 590 | 1893 | 42 | 628 | 15 |
| | Crosswalk (C-D-A) | 29 | 57 | 0 | 0 | 85 | 98 | 0 | 0 | 60 | 39 | 0 | 0 | 4 | 612 | 0 | 0 | 627 | 17 | 0 | 0 |
| ***Tenth Ave & W. 33rd St*** | Sidewalk A | 148 | 543 | 523 | 363 | 235 | 261 | 679 | 698 | 583 | 187 | 280 | 494 | 30 | 151 | 20 | 43 | 235 | 47 | 169 | 157 |
| | Sidewalk B | 204 | 142 | 116 | 599 | 398 | 305 | 160 | 174 | 497 | 175 | 613 | 166 | 18 | 83 | 20 | 426 | 195 | 80 | 441 | 37 |
| | Sidewalk C | 385 | 1046 | 108 | 117 | 338 | 356 | 232 | 228 | 1171 | 428 | 136 | 117 | 82 | 2351 | 6 | 616 | 2601 | 117 | 638 | 21 |
| | Sidewalk D | 223 | 437 | 393 | 685 | 814 | 773 | 517 | 494 | 666 | 188 | 852 | 414 | 469 | 488 | 59 | 1913 | 641 | 568 | 2135 | 142 |
| | Corner A & B | 0 | 0 | 25 | 6 | 0 | 0 | 9 | 7 | 0 | 0 | 19 | 25 | 0 | 2 | 1 | 2 | 15 | 0 | 5 | 8 |
| | Corner C & D | 4 | 11 | 7 | 3 | 0 | 1 | 27 | 26 | 16 | 9 | 3 | 7 | 0 | 581 | 443 | 0 | 594 | -3 | 2 | 458 |
| | Crosswalk (A-B-C) | 165 | 714 | 327 | 212 | 278 | 238 | 329 | 290 | 952 | 190 | 338 | 326 | 37 | 387 | 14 | 136 | 472 | 54 | 184 | 87 |
| | Crosswalk (C-D-A) | 410 | 902 | 426 | 399 | 474 | 457 | 881 | 835 | 1165 | 440 | 536 | 391 | 73 | 1854 | 27 | 124 | 2094 | 131 | 253 | 157 |
| ***Tenth Ave & W. 34th St*** | Sidewalk A | 109 | 519 | 472 | 212 | 549 | 576 | 615 | 633 | 617 | 106 | 178 | 525 | 19 | 31 | 19 | 27 | 101 | 69 | 148 | 136 |
| | Sidewalk B | 167 | 153 | 56 | 395 | 347 | 364 | 247 | 260 | 128 | 199 | 414 | 77 | 16 | 23 | 15 | 150 | 127 | 115 | 142 | 36 |
| | Sidewalk C | 75 | 696 | 199 | 203 | 438 | 529 | 362 | 344 | 570 | 108 | 251 | 178 | 14 | 350 | 15 | 84 | 379 | 59 | 180 | 83 |
| | Sidewalk D | 324 | 601 | 71 | 325 | 891 | 906 | 600 | 593 | 702 | 289 | 446 | 69 | 30 | 86 | 52 | 296 | 238 | 163 | 296 | 45 |
| | Corner A & B | 55 | 2 | 19 | 10 | 22 | 7 | 17 | 9 | 6 | 0 | 18 | 9 | 2 | 2 | 3 | 1 | 22 | 1 | 16 | 8 |
| | Corner C & D | 11 | 15 | 29 | 5 | 31 | 17 | 15 | 15 | 118 | -8 | 4 | 26 | 5 | 62 | 0 | 1 | 84 | 1 | 3 | 5 |
| | Crosswalk (A-B-C) | 84 | 476 | 236 | 172 | 416 | 380 | 390 | 458 | 681 | 89 | 117 | 445 | 26 | 119 | 11 | 60 | 168 | 52 | 111 | 121 |
| | Crosswalk (C-D-A) | 106 | 675 | 421 | 473 | 744 | 663 | 929 | 1019 | 1173 | 116 | 235 | 503 | 71 | 338 | 19 | 51 | 389 | 66 | 175 | 178 |
| ***Tenth Ave & W. 35th St*** | Sidewalk A | 83 | 397 | 316 | 207 | 370 | 388 | 570 | 572 | 357 | 82 | 169 | 274 | | | | | | | | |
| | Sidewalk B | 154 | 164 | 61 | 396 | 334 | 335 | 230 | 269 | 132 | 118 | 271 | 79 | | | | | | | | |
| | Sidewalk C | 65 | 361 | 174 | 147 | 282 | 327 | 332 | 349 | 285 | 99 | 117 | 197 | | | | | | | | |
| | Sidewalk D | 325 | 396 | 35 | 200 | 800 | 817 | 173 | 209 | 329 | 326 | 175 | 77 | | | | | | | | |
| | Corner A & B | 2 | 7 | 11 | 14 | 11 | 11 | 13 | 13 | 7 | 1 | 12 | 9 | | | | | | | | |
| | Corner C & D | 8 | 7 | 5 | 1 | 8 | 8 | 0 | 4 | 6 | 6 | 1 | 21 | | | | | | | | |
| | Crosswalk (A-B-C) | 76 | 430 | 170 | 159 | 304 | 335 | 339 | 350 | 329 | 88 | 131 | 168 | | | | | | | | |
| | Crosswalk (C-D-A) | 71 | 382 | 344 | 269 | 337 | 376 | 691 | 705 | 336 | 106 | 211 | 340 | | | | | | | | |

# Appendix S.5.2

**NET INCREMENTAL PEDESTRIAN VOLUMES (SIDEWALKS, CORNERS, AND CROSSWALKS)**
**2025 FUTURE WITH THE PROPOSED ACTION**

| Intersection | Elements | Weekday AM Peak 15-Min. | | | | Weekday MD Peak 15-Min. | | | | Weekday PM Peak 15-Min. | | | | Special Events Evening Peak 15-Min. | | | | Special Events Sunday Peak 15-Min. | | | |
|---|---|---|---|---|---|---|---|---|---|---|---|---|---|---|---|---|---|---|---|---|---|
| ***Tenth Ave & W. 36th St*** | Sidewalk A | 70 | 109 | 195 | 208 | 109 | 119 | 504 | 503 | 120 | 80 | 164 | 131 | | | | | | | | |
| | Sidewalk B | 146 | 147 | 82 | 158 | 347 | 348 | 150 | 161 | 119 | 120 | 176 | 96 | | | | | | | | |
| | Sidewalk C | 45 | 77 | 153 | 151 | 179 | 190 | 295 | 297 | 61 | 46 | 116 | 120 | | | | | | | | |
| | Sidewalk D | 203 | 262 | 34 | 65 | 621 | 621 | 146 | 153 | 225 | 145 | 79 | 58 | | | | | | | | |
| | Corner A & B | 3 | 8 | 13 | 12 | 2 | 2 | 16 | 16 | 8 | 2 | 8 | 9 | | | | | | | | |
| | Corner C & D | 9 | 10 | 3 | 0 | 10 | 11 | 0 | 0 | 7 | 8 | 0 | 5 | | | | | | | | |
| | Crosswalk (A-B-C) | 92 | 152 | 135 | 151 | 171 | 182 | 315 | 316 | 167 | 106 | 128 | 110 | | | | | | | | |
| | Crosswalk (C-D-A) | 63 | 113 | 201 | 242 | 229 | 239 | 564 | 564 | 111 | 73 | 209 | 147 | | | | | | | | |
| ***Tenth Ave & W. 37th St*** | Sidewalk A | 115 | 169 | 191 | 184 | 275 | 278 | 364 | 363 | 140 | 88 | 146 | 127 | | | | | | | | |
| | Sidewalk B | 175 | 169 | 107 | 146 | 337 | 338 | 234 | 241 | 129 | 148 | 120 | 90 | | | | | | | | |
| | Sidewalk C | 52 | 121 | 145 | 140 | 119 | 130 | 303 | 305 | 102 | 50 | 104 | 110 | | | | | | | | |
| | Sidewalk D | 210 | 212 | 16 | 65 | 483 | 477 | 47 | 54 | 177 | 144 | 77 | 24 | | | | | | | | |
| | Corner A & B | 3 | 4 | 20 | 18 | 10 | 10 | 25 | 24 | 3 | 3 | 13 | 13 | | | | | | | | |
| | Corner C & D | 9 | 10 | 1 | 0 | 10 | 11 | 0 | 0 | 7 | 8 | 0 | 2 | | | | | | | | |
| | Crosswalk (A-B-C) | 142 | 185 | 139 | 130 | 303 | 302 | 306 | 301 | 171 | 115 | 109 | 104 | | | | | | | | |
| | Crosswalk (C-D-A) | 73 | 306 | 220 | 202 | 139 | 142 | 439 | 435 | 288 | 71 | 162 | 138 | | | | | | | | |
| ***Tenth Ave & W. 38th St*** | Sidewalk A | 90 | 188 | 187 | 242 | 274 | 300 | 294 | 291 | 146 | 89 | 196 | 149 | | | | | | | | |
| | Sidewalk B | 139 | 157 | 63 | 137 | 284 | 271 | 184 | 200 | 143 | 111 | 98 | 63 | | | | | | | | |
| | Sidewalk C | 52 | 97 | 180 | 153 | 145 | 152 | 303 | 303 | 90 | 52 | 125 | 163 | | | | | | | | |
| | Sidewalk D | 182 | 220 | 38 | 130 | 333 | 322 | 148 | 152 | 159 | 134 | 138 | 40 | | | | | | | | |
| | Corner A & B | 6 | 27 | 3 | 2 | 17 | 17 | 8 | 8 | 24 | 5 | 1 | 2 | | | | | | | | |
| | Corner C & D | 21 | 21 | 1 | 0 | 22 | 22 | 0 | 0 | 15 | 15 | 0 | 2 | | | | | | | | |
| | Crosswalk (A-B-C) | 102 | 203 | 136 | 131 | 260 | 285 | 288 | 279 | 148 | 96 | 121 | 114 | | | | | | | | |
| | Crosswalk (C-D-A) | 69 | 135 | 187 | 251 | 183 | 180 | 339 | 335 | 145 | 61 | 184 | 143 | | | | | | | | |
| ***Tenth Ave & W. 39th St*** | Sidewalk A | 17 | 201 | 150 | 317 | 31 | 39 | 226 | 227 | 191 | 30 | 270 | 134 | | | | | | | | |
| | Sidewalk B | 172 | 316 | 15 | 58 | 306 | 287 | 36 | 45 | 312 | 152 | 53 | 23 | | | | | | | | |
| | Sidewalk C | 53 | 104 | 127 | 142 | 138 | 147 | 231 | 218 | 94 | 54 | 132 | 105 | | | | | | | | |
| | Sidewalk D | 200 | 256 | 32 | 179 | 263 | 260 | 149 | 157 | 213 | 167 | 171 | 41 | | | | | | | | |
| | Corner A & B | 6 | 81 | 2 | 1 | 7 | 7 | 4 | 4 | 77 | 8 | 1 | 2 | | | | | | | | |
| | Corner C & D | 15 | 15 | 0 | 0 | 16 | 16 | 0 | 0 | 10 | 12 | 0 | 0 | | | | | | | | |
| | Crosswalk (A-B-C) | 38 | 147 | 146 | 225 | 53 | 60 | 279 | 263 | 142 | 45 | 221 | 128 | | | | | | | | |
| | Crosswalk (C-D-A) | 67 | 182 | 172 | 262 | 170 | 175 | 248 | 247 | 175 | 70 | 218 | 148 | | | | | | | | |
| ***Tenth Ave & W. 40th St*** | Sidewalk A | 51 | 55 | 214 | 333 | 102 | 142 | 265 | 267 | 30 | 68 | 281 | 184 | | | | | | | | |
| | Sidewalk B | 302 | 365 | 54 | 160 | 440 | 424 | 115 | 132 | 354 | 280 | 147 | 58 | | | | | | | | |
| | Sidewalk C | 7 | 32 | 170 | 315 | 14 | 33 | 291 | 273 | 20 | 18 | 311 | 151 | | | | | | | | |
| | Sidewalk D | 149 | 316 | 2 | 4 | 212 | 213 | 0 | 0 | 269 | 133 | 5 | 3 | | | | | | | | |
| | Corner A & B | 31 | 31 | 108 | 9 | 34 | 34 | 64 | 68 | 24 | 24 | 9 | 112 | | | | | | | | |
| | Corner C & D | 2 | 2 | 0 | 0 | 1 | 1 | 0 | 0 | 2 | 1 | 1 | 0 | | | | | | | | |
| | Crosswalk (A-B-C) | 72 | 112 | 181 | 310 | 135 | 167 | 310 | 282 | 84 | 78 | 312 | 156 | | | | | | | | |
| | Crosswalk (C-D-A) | 15 | 24 | 153 | 309 | 22 | 32 | 212 | 204 | 17 | 19 | 274 | 135 | | | | | | | | |
| ***Tenth Ave & W. 41st St*** | Sidewalk A | 17 | 12 | 108 | 179 | 36 | 54 | 164 | 179 | 3 | 28 | 120 | 97 | | | | | | | | |
| | Sidewalk B | 142 | 187 | 14 | 25 | 329 | 293 | 37 | 55 | 245 | 100 | 15 | 22 | | | | | | | | |
| | Sidewalk C | 48 | 69 | 484 | 995 | 82 | 103 | 565 | 545 | 38 | 51 | 941 | 462 | | | | | | | | |
| | Sidewalk D | 226 | 341 | 66 | 231 | 258 | 260 | 111 | 176 | 304 | 199 | 160 | 180 | | | | | | | | |
| | Corner A & B | 0 | 0 | 4 | 3 | 0 | 0 | 8 | 8 | 0 | 0 | 3 | 7 | | | | | | | | |
| | Corner C & D | 22 | 34 | 26 | 25 | 54 | 58 | 28 | 28 | 15 | 19 | 19 | 19 | | | | | | | | |
| | Crosswalk (A-B-C) | 57 | 32 | 118 | 199 | 76 | 88 | 313 | 284 | 23 | 45 | 234 | 76 | | | | | | | | |
| | Crosswalk (C-D-A) | 157 | 386 | 132 | 184 | 182 | 240 | 183 | 192 | 317 | 259 | 139 | 114 | | | | | | | | |
| ***Tenth Ave & W. 42nd St*** | Sidewalk A | 12 | -3 | 55 | 72 | 7 | 14 | 101 | 101 | 20 | 39 | 59 | 42 | | | | | | | | |
| | Sidewalk B | 66 | 73 | 16 | 52 | 193 | 190 | 23 | 52 | 69 | 53 | 30 | 38 | | | | | | | | |
| | Sidewalk C | 265 | 443 | 94 | 149 | 235 | 399 | 227 | 188 | 293 | 503 | 227 | 54 | | | | | | | | |
| | Sidewalk D | 96 | 165 | 194 | 233 | 137 | 152 | 165 | 339 | 110 | 87 | 88 | 431 | | | | | | | | |
| | Corner A & B | -7 | -5 | 0 | 1 | -8 | -8 | 1 | 0 | 2 | 0 | 2 | 0 | | | | | | | | |
| | Corner C & D | 20 | 25 | 16 | 23 | 46 | 12 | 17 | 17 | 105 | 9 | 21 | 13 | | | | | | | | |
| | Crosswalk (A-B-C) | 47 | 23 | 91 | 155 | 32 | 37 | 227 | 245 | 22 | 45 | 116 | 75 | | | | | | | | |
| | Crosswalk (C-D-A) | 188 | 220 | 71 | 147 | 172 | 324 | 114 | 149 | 94 | 415 | 77 | 79 | | | | | | | | |
| ***Dyer Ave & W. 42nd St*** | Sidewalk A | 10 | 45 | 0 | 0 | 10 | 39 | 0 | 0 | 25 | 33 | 0 | 0 | | | | | | | | |
| | Sidewalk B | 0 | 0 | 10 | 45 | 0 | 0 | 10 | 39 | 0 | 0 | 25 | 33 | | | | | | | | |
| | Sidewalk C | 111 | 192 | 0 | 0 | 131 | 226 | 0 | 0 | 131 | 177 | 0 | 0 | | | | | | | | |
| | Sidewalk D | 0 | 0 | 111 | 192 | 0 | 0 | 131 | 226 | 0 | 0 | 131 | 177 | | | | | | | | |
| | Corner A & B | 0 | 0 | 0 | 0 | 0 | 0 | 0 | 0 | 0 | 0 | 0 | 0 | | | | | | | | |
| | Corner C & D | 0 | 0 | 0 | 0 | 0 | 0 | 0 | 0 | 0 | 0 | 0 | 0 | | | | | | | | |
| | Crosswalk (A-B-C) | 0 | 0 | 0 | 0 | 0 | 0 | 0 | 0 | 0 | 0 | 0 | 0 | | | | | | | | |
| | Crosswalk (C-D-A) | 111 | 192 | 0 | 0 | 131 | 226 | 0 | 0 | 131 | 177 | 0 | 0 | | | | | | | | |
| ***Ninth Ave & W. 30th St*** | Sidewalk A | 71 | 80 | 30 | 28 | 227 | 229 | 115 | 114 | 59 | 49 | 25 | 26 | 6 | 24 | 69 | 3 | 83 | 50 | 296 | 20 |
| | Sidewalk B | 37 | 35 | 14 | 24 | 108 | 106 | 34 | 35 | 33 | 31 | 25 | 17 | 23 | 0 | -1 | 32 | 124 | 19 | 19 | 74 |
| | Sidewalk C | 13 | 22 | 70 | 67 | 31 | 34 | 209 | 206 | 20 | 17 | 50 | 49 | -1 | 12 | 17 | 1 | 2 | 124 | 130 | 41 |
| | Sidewalk D | 58 | 55 | 11 | 20 | 213 | 210 | 36 | 38 | 39 | 39 | 20 | 14 | 43 | -1 | -1 | -3 | 110 | 25 | 9 | -11 |
| | Corner A & B | 0 | 0 | 0 | 0 | -1 | 0 | 0 | -1 | 1 | 1 | 0 | 0 | 1 | 0 | 6 | 0 | 2 | 0 | 36 | 0 |
| | Corner C & D | 1 | 1 | 0 | 0 | 1 | 1 | 0 | 0 | 0 | 0 | 0 | 0 | 0 | 0 | -2 | -2 | 1 | 1 | 60 | -5 |
| | Crosswalk (A-B-C) | 42 | 52 | 69 | 67 | 127 | 129 | 206 | 204 | 42 | 34 | 50 | 50 | 2 | 31 | 22 | 1 | 39 | 105 | 158 | 41 |
| | Crosswalk (C-D-A) | 12 | 21 | 59 | 57 | 30 | 33 | 213 | 210 | 20 | 16 | 40 | 42 | -1 | 7 | 57 | 2 | 1 | 95 | 225 | 48 |
| ***Ninth Ave & W. 31st St*** | Sidewalk A | 83 | 402 | 66 | 247 | 150 | 149 | 181 | 179 | 460 | 108 | 257 | 64 | 20 | 672 | 121 | 491 | 620 | 355 | 627 | 210 |
| | Sidewalk B | 55 | 184 | 28 | 38 | 177 | 175 | 84 | 81 | 186 | 48 | 55 | 32 | 1 | 1 | 11 | 2100 | 16 | 15 | 1857 | 352 |
| | Sidewalk C | 20 | 35 | 62 | 58 | 35 | 48 | 189 | 186 | 38 | 28 | 46 | 48 | 2 | 50 | 26 | 2 | 15 | 63 | 140 | 34 |
| | Sidewalk D | 54 | 52 | 33 | 85 | 195 | 193 | 82 | 94 | 38 | 41 | 56 | 40 | 69 | 3 | 5 | 22 | 370 | 31 | 25 | 20 |
| | Corner A & B | 33 | 208 | 3 | 3 | 42 | 42 | -1 | -1 | 232 | 43 | 2 | 2 | 32 | 63 | 0 | 0 | 74 | 87 | 3 | 3 |
| | Corner C & D | 0 | 0 | 11 | 8 | 0 | 0 | 21 | 21 | 0 | 0 | 7 | 10 | 0 | 0 | 1 | 1 | 0 | 0 | 5 | 6 |
| | Crosswalk (A-B-C) | 46 | 184 | 42 | 40 | 113 | 112 | 166 | 163 | 219 | 58 | 33 | 32 | 10 | 2126 | 29 | 2 | 1856 | 430 | 104 | 23 |
| | Crosswalk (C-D-A) | 37 | 54 | 55 | 54 | 55 | 69 | 176 | 175 | 55 | 43 | 42 | 42 | 3 | 48 | 96 | 2 | 26 | 101 | 453 | 34 |
| ***Ninth Ave & W. 33rd St*** | Sidewalk A | 110 | 533 | 158 | 259 | 128 | 142 | 321 | 369 | 607 | 163 | 73 | 173 | 59 | 174 | 14 | 695 | 418 | 35 | 116 | 700 |
| | Sidewalk B | 109 | 139 | 32 | 183 | 305 | 313 | 58 | 59 | 111 | 98 | 184 | 45 | 9 | 270 | 11 | 745 | 157 | 273 | 421 | 576 |
| | Sidewalk C | 218 | 163 | 565 | 136 | 122 | 115 | 229 | 241 | 178 | 277 | 90 | 625 | 37 | 2544 | 1 | 1 | 2350 | 440 | 20 | 17 |
| | Sidewalk D | 659 | 153 | 278 | 1025 | 236 | 237 | 349 | 371 | 130 | 729 | 1092 | 354 | 1 | 1011 | 33 | 3022 | 42 | 1268 | 2528 | 963 |
| | Corner A & B | 3 | 23 | 1 | 7 | 10 | 23 | 0 | 2 | 48 | 21 | 2 | 1 | 2 | 12 | 0 | 2 | 5 | 11 | 1 | 9 |
| | Corner C & D | 1 | 0 | 480 | 26 | 0 | 0 | 36 | 30 | 0 | 1 | 49 | 537 | 1 | 0 | 0 | 0 | 1 | 0 | 0 | 0 |
| | Crosswalk (A-B-C) | 76 | 324 | 265 | 200 | 86 | 83 | 331 | 341 | 367 | 98 | 165 | 276 | 20 | 672 | 13 | 356 | 451 | 297 | 159 | 586 |
| | Crosswalk (C-D-A) | 239 | 533 | 357 | 231 | 233 | 224 | 347 | 378 | 625 | 286 | 106 | 383 | 30 | 2882 | 12 | 1221 | 2432 | 950 | 173 | 1397 |

# Appendix S.5.2

**NET INCREMENTAL PEDESTRIAN VOLUMES (SIDEWALKS, CORNERS, AND CROSSWALKS)**
**2025 FUTURE WITH THE PROPOSED ACTION**

| Intersection | Elements | Weekday AM Peak 15-Min. | | | | Weekday MD Peak 15-Min. | | | | Weekday PM Peak 15-Min. | | | | Special Events Evening Peak 15-Min. | | | | Special Events Sunday Peak 15-Min. | | | |
|---|---|---|---|---|---|---|---|---|---|---|---|---|---|---|---|---|---|---|---|---|---|
| ***Ninth Ave & W. 34th St*** | Sidewalk A | 48 | 369 | 106 | 98 | 210 | 217 | 289 | 286 | 408 | 67 | 79 | 83 | 14 | 37 | 12 | 318 | 56 | 31 | 71 | 398 |
| | Sidewalk B | 66 | 87 | 30 | 279 | 268 | 266 | 103 | 62 | 64 | 54 | 496 | 29 | 9 | 30 | 14 | 596 | 58 | 90 | 198 | 267 |
| | Sidewalk C | 40 | 358 | 114 | 144 | 67 | 86 | 328 | 335 | 378 | 66 | 114 | 104 | 10 | 590 | 10 | 271 | 451 | 387 | 158 | 274 |
| | Sidewalk D | 169 | 142 | 74 | 798 | 345 | 394 | 408 | 500 | 71 | 182 | 570 | 111 | 13 | 928 | 17 | 351 | 160 | 922 | 384 | 63 |
| | Corner A & B | 5 | 8 | 2 | 2 | 65 | 65 | 4 | 1 | 7 | 3 | -6 | 1 | 0 | 0 | 0 | 0 | 3 | 3 | 0 | 2 |
| | Corner C & D | 1 | 105 | 322 | 18 | 1 | 2 | 217 | 141 | 9 | 2 | 35 | 68 | 1 | 133 | 46 | 5 | 89 | 138 | 24 | 16 |
| | Crosswalk (A-B-C) | 43 | 321 | 104 | 86 | 149 | 135 | 234 | 200 | 425 | 60 | 165 | 57 | 13 | 377 | 9 | 247 | 167 | 164 | 95 | 198 |
| | Crosswalk (C-D-A) | 102 | 468 | 150 | 98 | 246 | 264 | 248 | 224 | 457 | 85 | 133 | 113 | 14 | 588 | 10 | 549 | 410 | 349 | 105 | 540 |
| ***Ninth Ave & W. 37th St*** | Sidewalk A | 96 | 131 | 61 | 69 | 191 | 200 | 201 | 202 | 110 | 84 | 62 | 55 | | | | | | | | |
| | Sidewalk B | 78 | 68 | 47 | 78 | 229 | 229 | 71 | 79 | 52 | 62 | 77 | 51 | | | | | | | | |
| | Sidewalk C | 30 | 84 | 94 | 80 | 59 | 67 | 254 | 256 | 79 | 33 | 63 | 72 | | | | | | | | |
| | Sidewalk D | 74 | 74 | 49 | 112 | 223 | 223 | 84 | 95 | 63 | 59 | 97 | 49 | | | | | | | | |
| | Corner A & B | 12 | 14 | 0 | 0 | 16 | 17 | 1 | 1 | 11 | 10 | 0 | 0 | | | | | | | | |
| | Corner C & D | 0 | 0 | 7 | 3 | -1 | -1 | 1 | 1 | 0 | 0 | 2 | 3 | | | | | | | | |
| | Crosswalk (A-B-C) | 71 | 104 | 95 | 84 | 130 | 137 | 262 | 263 | 92 | 67 | 68 | 76 | | | | | | | | |
| | Crosswalk (C-D-A) | 41 | 97 | 73 | 78 | 70 | 78 | 231 | 232 | 88 | 42 | 68 | 63 | | | | | | | | |
| ***Ninth Ave & W. 38th St*** | Sidewalk A | 53 | 123 | 27 | 32 | 147 | 163 | 121 | 120 | 89 | 56 | 35 | 27 | | | | | | | | |
| | Sidewalk B | 82 | 189 | 21 | 31 | 209 | 237 | 23 | 31 | 107 | 81 | 31 | 32 | | | | | | | | |
| | Sidewalk C | 123 | 56 | 69 | 55 | 80 | 64 | 181 | 181 | 63 | 53 | 44 | 58 | | | | | | | | |
| | Sidewalk D | 67 | 56 | 43 | 85 | 156 | 158 | 108 | 115 | 57 | 65 | 81 | 45 | | | | | | | | |
| | Corner A & B | 2 | 27 | 0 | 0 | 8 | 14 | 1 | 1 | 9 | 5 | 0 | 0 | | | | | | | | |
| | Corner C & D | 4 | 4 | 3 | 2 | 3 | 2 | 1 | 2 | 3 | 3 | 3 | 4 | | | | | | | | |
| | Crosswalk (A-B-C) | 38 | 77 | 95 | 174 | 87 | 96 | 236 | 263 | 71 | 45 | 91 | 93 | | | | | | | | |
| | Crosswalk (C-D-A) | 49 | 81 | 45 | 41 | 86 | 95 | 157 | 158 | 81 | 55 | 46 | 45 | | | | | | | | |
| ***Ninth Ave & W. 39th St*** | Sidewalk A | 14 | 58 | 47 | 50 | 32 | 42 | 118 | 107 | 53 | 23 | 70 | 34 | | | | | | | | |
| | Sidewalk B | 94 | 252 | -3 | 14 | 213 | 247 | 19 | 27 | 137 | 97 | 15 | 13 | | | | | | | | |
| | Sidewalk C | 26 | 33 | 70 | 175 | 30 | 39 | 161 | 187 | 37 | 32 | 95 | 73 | | | | | | | | |
| | Sidewalk D | 13 | 20 | 45 | 93 | 71 | 69 | 111 | 119 | 20 | 14 | 86 | 48 | | | | | | | | |
| | Corner A & B | 3 | 5 | -1 | -1 | 9 | 1 | 1 | 1 | 33 | 0 | -1 | -1 | | | | | | | | |
| | Corner C & D | 1 | 0 | 0 | -2 | 1 | 3 | 0 | -2 | -9 | 1 | -1 | 0 | | | | | | | | |
| | Crosswalk (A-B-C) | 7 | 51 | 90 | 219 | 21 | 35 | 210 | 239 | 37 | 20 | 119 | 92 | | | | | | | | |
| | Crosswalk (C-D-A) | 26 | 72 | 38 | 43 | 69 | 81 | 110 | 105 | 60 | 37 | 50 | 28 | | | | | | | | |
| ***Ninth Ave & W. 42nd St*** | Sidewalk A | 10 | 45 | 20 | 31 | 10 | 39 | 78 | 79 | 25 | 33 | 20 | 10 | | | | | | | | |
| | Sidewalk B | 38 | 41 | 26 | 116 | 88 | 88 | 23 | 62 | 35 | 32 | 85 | 58 | | | | | | | | |
| | Sidewalk C | 73 | 74 | 35 | 52 | 56 | 130 | 89 | 88 | 52 | 135 | 42 | 24 | | | | | | | | |
| | Sidewalk D | 28 | 32 | 111 | 192 | 74 | 75 | 131 | 226 | 26 | 24 | 131 | 177 | | | | | | | | |
| | Corner A & B | 1 | 1 | 0 | 0 | 0 | 1 | 0 | 0 | 1 | 2 | 0 | 0 | | | | | | | | |
| | Corner C & D | 3 | 0 | 3 | 3 | 4 | 1 | 9 | 9 | 7 | 1 | 3 | 3 | | | | | | | | |
| | Crosswalk (A-B-C) | 18 | 67 | 44 | 88 | 22 | 52 | 91 | 101 | 53 | 41 | 63 | 46 | | | | | | | | |
| | Crosswalk (C-D-A) | 81 | 114 | 34 | 87 | 87 | 171 | 89 | 100 | 74 | 146 | 60 | 33 | | | | | | | | |
| ***Eighth Ave & W. 30th St*** | Sidewalk A | 10 | 16 | 69 | 43 | 21 | 22 | 65 | 61 | 21 | 15 | 44 | 65 | 1 | 33 | 9 | 6 | 27 | 82 | 30 | 26 |
| | Sidewalk B | 186 | 78 | 13 | 52 | 219 | 219 | 27 | 29 | 83 | 194 | 58 | 20 | 14 | 31 | 1 | 2 | 64 | 47 | 1 | -2 |
| | Sidewalk C | 6 | 15 | 128 | 54 | 17 | 19 | 147 | 147 | 17 | 12 | 56 | 133 | -1 | 1 | 31 | 7 | -3 | -6 | 182 | 34 |
| | Sidewalk D | 47 | 37 | 25 | 16 | 70 | 67 | 22 | 23 | 38 | 44 | 19 | 33 | 5 | 1 | 0 | 12 | 20 | 13 | 0 | 122 |
| | Corner A & B | 2 | 2 | 40 | 9 | 3 | 2 | 24 | 24 | 1 | 1 | 11 | 45 | 0 | 0 | 2 | 2 | 2 | 2 | 4 | 5 |
| | Corner C & D | 0 | 0 | 0 | 0 | 0 | 0 | 0 | 0 | 0 | 0 | 0 | 0 | 0 | 0 | 0 | 0 | 0 | 0 | 0 | 0 |
| | Crosswalk (A-B-C) | 12 | 18 | 141 | 64 | 21 | 23 | 180 | 179 | 21 | 15 | 65 | 144 | 0 | 32 | 22 | 9 | 17 | 71 | 114 | 39 |
| | Crosswalk (C-D-A) | 8 | 14 | 63 | 37 | 17 | 19 | 59 | 55 | 16 | 13 | 41 | 62 | -1 | 11 | 6 | 2 | -2 | 68 | 22 | 16 |
| ***Eighth Ave & W. 31st St*** | Sidewalk A | 24 | 30 | 33 | 28 | 69 | 66 | 49 | 46 | 50 | 29 | 27 | 27 | 4 | 176 | 3 | 3 | 97 | 125 | 19 | 18 |
| | Sidewalk B | 148 | 65 | 140 | 69 | 178 | 174 | 179 | 181 | 76 | 149 | 74 | 148 | 15 | 15 | 14 | 770 | 78 | 82 | 665 | 136 |
| | Sidewalk C | 13 | 50 | 194 | 84 | 29 | 39 | 235 | 235 | 57 | 21 | 86 | 201 | 1 | 55 | 16 | 32 | 12 | 106 | 53 | 51 |
| | Sidewalk D | 78 | 53 | 18 | 59 | 86 | 82 | 30 | 42 | 52 | 75 | 33 | 26 | 9 | 4 | 2 | 49 | 34 | 27 | 12 | 59 |
| | Corner A & B | 0 | 1 | 0 | 1 | 0 | 0 | 0 | 0 | 1 | 1 | 1 | 0 | 0 | 1 | 0 | 0 | 0 | 1 | 0 | 0 |
| | Corner C & D | 0 | 0 | 8 | 4 | 0 | 0 | 3 | 3 | 0 | 0 | 5 | 8 | 0 | 0 | 0 | 1 | 0 | 0 | 3 | 3 |
| | Crosswalk (A-B-C) | 24 | 29 | 266 | 109 | 62 | 59 | 305 | 304 | 47 | 27 | 113 | 276 | 12 | 1369 | 48 | 16 | 1188 | 279 | 116 | 66 |
| | Crosswalk (C-D-A) | 49 | 38 | 36 | 30 | 53 | 65 | 56 | 52 | 42 | 58 | 29 | 31 | 4 | 52 | 5 | 0 | 21 | 68 | 20 | 12 |
| ***Eighth Ave & W. 33rd St*** | Sidewalk A | 58 | 176 | 56 | 75 | 49 | 50 | 73 | 76 | 181 | 78 | 71 | 56 | 5 | 258 | 6 | 52 | 171 | 130 | 59 | 44 |
| | Sidewalk B | 151 | 262 | 14 | 120 | 366 | 325 | 30 | 33 | 437 | 120 | 115 | 24 | 21 | 164 | 44 | 261 | 189 | 144 | 141 | 151 |
| | Sidewalk C | 213 | 98 | 195 | 206 | 230 | 251 | 238 | 227 | 90 | 304 | 287 | 215 | 16 | 438 | 17 | 25 | 383 | 153 | 94 | 112 |
| | Sidewalk D | 38 | 28 | 33 | 149 | 43 | 39 | 78 | 69 | 23 | 31 | 162 | 54 | -1 | -2 | 22 | 1989 | 3 | 0 | 1803 | 363 |
| | Corner A & B | 1 | 1 | 0 | 0 | 0 | 0 | 0 | 0 | 2 | 1 | 1 | 0 | 0 | 38 | 0 | 0 | 0 | 44 | 0 | 1 |
| | Corner C & D | 0 | 0 | 3 | 0 | 0 | 0 | 0 | 0 | 0 | 0 | 0 | 4 | 0 | 0 | 0 | 0 | 0 | 0 | 1 | 2 |
| | Crosswalk (A-B-C) | 53 | 144 | 190 | 352 | 70 | 66 | 433 | 398 | 146 | 59 | 530 | 173 | 48 | 403 | 24 | 57 | 266 | 188 | 110 | 149 |
| | Crosswalk (C-D-A) | 75 | 84 | 53 | 89 | 72 | 74 | 56 | 54 | 91 | 100 | 98 | 55 | 21 | 1432 | 5 | 31 | 1295 | 306 | 26 | 59 |
| ***Eighth Ave & W. 34th St*** | Sidewalk A | 70 | 212 | 95 | 87 | 64 | 28 | 64 | 67 | 407 | 102 | 76 | 97 | 8 | 73 | 6 | 10 | 56 | 70 | 27 | 34 |
| | Sidewalk B | 86 | 143 | 12 | 66 | 210 | 212 | 7 | 38 | 122 | 84 | 44 | 38 | 10 | 43 | 4 | 200 | 61 | 69 | 110 | 112 |
| | Sidewalk C | 18 | 110 | 200 | 260 | 25 | 49 | 354 | 313 | 114 | 47 | 438 | 171 | 4 | 602 | 22 | 165 | 456 | 185 | 187 | 143 |
| | Sidewalk D | 53 | 69 | 32 | 349 | 57 | 59 | 48 | 68 | 66 | 55 | 368 | 60 | 5 | 126 | 10 | 590 | 103 | 65 | 423 | 226 |
| | Corner A & B | -1 | -4 | 1 | 1 | -14 | -14 | 4 | 0 | 16 | 2 | 4 | 0 | 1 | 1 | 1 | 1 | -2 | -1 | 1 | 3 |
| | Corner C & D | 8 | 13 | 6 | 3 | 29 | 18 | 1 | 2 | 48 | 8 | 5 | 7 | 7 | 122 | 0 | 0 | 116 | 40 | 2 | 2 |
| | Crosswalk (A-B-C) | 45 | 192 | 154 | 225 | 45 | 53 | 313 | 271 | 251 | 91 | 393 | 119 | 6 | 230 | 14 | 79 | 129 | 118 | 95 | 121 |
| | Crosswalk (C-D-A) | 41 | 173 | 46 | 91 | 37 | 50 | 58 | 65 | 189 | 51 | 76 | 52 | 8 | 549 | 6 | 57 | 417 | 190 | 47 | 54 |
| ***Eighth Ave & W. 37th St*** | Sidewalk A | 31 | 57 | 12 | 24 | 45 | 52 | 27 | 26 | 59 | 37 | 43 | 31 | | | | | | | | |
| | Sidewalk B | 11 | 33 | 10 | 19 | 20 | 20 | 15 | 23 | 42 | 16 | 16 | 19 | | | | | | | | |
| | Sidewalk C | 5 | 26 | 33 | 33 | 10 | 20 | 64 | 63 | 21 | 16 | 35 | 34 | | | | | | | | |
| | Sidewalk D | 25 | 11 | 18 | 68 | 20 | 20 | 37 | 45 | 22 | 36 | 67 | 25 | | | | | | | | |
| | Corner A & B | 2 | 23 | 0 | 0 | 9 | 8 | 0 | 0 | 27 | 4 | 0 | 0 | | | | | | | | |
| | Corner C & D | 3 | 5 | 5 | 1 | 8 | 8 | 1 | 0 | 5 | 4 | 1 | 2 | | | | | | | | |
| | Crosswalk (A-B-C) | 18 | 24 | 21 | 45 | 26 | 34 | 48 | 47 | 20 | 24 | 53 | 27 | | | | | | | | |
| | Crosswalk (C-D-A) | 16 | 61 | 21 | 12 | 34 | 43 | 25 | 24 | 64 | 24 | 26 | 38 | | | | | | | | |
| ***Eighth Ave & W. 38th St*** | Sidewalk A | 14 | 18 | 38 | -4 | 3 | 11 | 47 | 47 | 20 | 27 | 44 | 57 | | | | | | | | |
| | Sidewalk B | 28 | 11 | 21 | 9 | 27 | 26 | 9 | 18 | 44 | 33 | 13 | 31 | | | | | | | | |
| | Sidewalk C | 11 | 23 | 7 | 4 | 11 | 19 | 16 | 15 | 18 | 18 | 35 | 14 | | | | | | | | |
| | Sidewalk D | 8 | -5 | 89 | 42 | 23 | 23 | 56 | 65 | 37 | 29 | 57 | 99 | | | | | | | | |
| | Corner A & B | 3 | 2 | 0 | 0 | 2 | 2 | 0 | 0 | 1 | 3 | 0 | 0 | | | | | | | | |
| | Corner C & D | 0 | 0 | 3 | 3 | 0 | 0 | 3 | 3 | 0 | 0 | 2 | 3 | | | | | | | | |
| | Crosswalk (A-B-C) | 24 | 15 | 26 | 5 | 10 | 19 | 24 | 24 | 18 | 34 | 41 | 33 | | | | | | | | |
| | Crosswalk (C-D-A) | 35 | 29 | 54 | -1 | 23 | 32 | 51 | 52 | 31 | 44 | 56 | 78 | | | | | | | | |

# Appendix S.5.2

**NET INCREMENTAL PEDESTRIAN VOLUMES (SIDEWALKS, CORNERS, AND CROSSWALKS)**
**2025 FUTURE WITH THE PROPOSED ACTION**

| Intersection | Elements | Weekday AM Peak 15-Min. | | | | Weekday MD Peak 15-Min. | | | | Weekday PM Peak 15-Min. | | | | Special Events Evening Peak 15-Min. | | | | Special Events Sunday Peak 15-Min. | | | |
|---|---|---|---|---|---|---|---|---|---|---|---|---|---|---|---|---|---|---|---|---|---|
| ***Eighth Ave & W. 39th St*** | Sidewalk A | -11 | 3 | 23 | -67 | 4 | 13 | 68 | 71 | 5 | 6 | 17 | 75 | | | | | | | | |
| | Sidewalk B | 40 | 6 | -7 | 2 | 30 | 30 | 9 | 18 | 41 | 45 | 9 | 7 | | | | | | | | |
| | Sidewalk C | 11 | 20 | 26 | 6 | 7 | 17 | 29 | 28 | 15 | 19 | 39 | 33 | | | | | | | | |
| | Sidewalk D | 35 | -9 | 55 | 3 | 49 | 50 | 27 | 37 | 40 | 57 | 23 | 70 | | | | | | | | |
| | Corner A & B | -12 | -12 | 0 | 0 | 4 | 3 | 0 | 0 | -5 | -2 | 0 | 0 | | | | | | | | |
| | Corner C & D | 0 | 0 | 3 | 4 | 0 | 0 | 3 | 3 | 0 | 0 | 3 | 3 | | | | | | | | |
| | Crosswalk (A-B-C) | -11 | 0 | 36 | 3 | 12 | 21 | 29 | 28 | 10 | 8 | 37 | 42 | | | | | | | | |
| | Crosswalk (C-D-A) | 18 | 16 | 58 | -35 | 13 | 21 | 60 | 63 | 21 | 29 | 32 | 89 | | | | | | | | |
| ***Eighth Ave & W. 42nd St*** | Sidewalk A | 22 | 109 | -12 | -8 | 15 | 54 | 14 | 14 | 80 | 54 | 0 | -3 | | | | | | | | |
| | Sidewalk B | 0 | 3 | 13 | 50 | 10 | 10 | 7 | 57 | 5 | 2 | 32 | 51 | | | | | | | | |
| | Sidewalk C | 9 | 29 | -1 | 0 | 6 | 58 | 6 | 5 | 14 | 52 | 2 | 0 | | | | | | | | |
| | Sidewalk D | -4 | 14 | 33 | 121 | 26 | 25 | 40 | 115 | 36 | 5 | 91 | 127 | | | | | | | | |
| | Corner A & B | 1 | 1 | 0 | 0 | 1 | 1 | 0 | 0 | 2 | 2 | 0 | 0 | | | | | | | | |
| | Corner C & D | 0 | 0 | 9 | 0 | 0 | 0 | 15 | 8 | 0 | 0 | 35 | 4 | | | | | | | | |
| | Crosswalk (A-B-C) | 8 | 31 | 3 | 23 | 5 | 46 | 11 | 22 | 19 | 40 | 19 | 14 | | | | | | | | |
| | Crosswalk (C-D-A) | 17 | 55 | 1 | 66 | 18 | 81 | 21 | 37 | 33 | 68 | 42 | 24 | | | | | | | | |
| ***Seventh Ave & W. 31st St*** | Sidewalk A | 35 | 113 | 56 | 30 | 125 | 127 | 109 | 109 | 116 | 39 | 26 | 48 | | | | | | | | |
| | Sidewalk B | 12 | 12 | 21 | 85 | 49 | 49 | 71 | 73 | 7 | 5 | 86 | 27 | | | | | | | | |
| | Sidewalk C | 3 | 7 | 55 | 24 | 9 | 11 | 88 | 87 | 7 | 9 | 20 | 54 | | | | | | | | |
| | Sidewalk D | 29 | 27 | 4 | 29 | 113 | 113 | 5 | 15 | 18 | 19 | 8 | 11 | | | | | | | | |
| | Corner A & B | 0 | -1 | 0 | 0 | 0 | 0 | 0 | 0 | 0 | 0 | 0 | 0 | | | | | | | | |
| | Corner C & D | 0 | 23 | 22 | 0 | 0 | 0 | 9 | 1 | 0 | 0 | 4 | 1 | | | | | | | | |
| | Crosswalk (A-B-C) | 27 | 110 | 33 | 16 | 79 | 82 | 57 | 56 | 115 | 36 | 14 | 30 | | | | | | | | |
| | Crosswalk (C-D-A) | 14 | 33 | 58 | 40 | 44 | 46 | 155 | 155 | 32 | 17 | 29 | 47 | | | | | | | | |
| ***Seventh Ave & W. 33rd St*** | Sidewalk A | 4 | 62 | 25 | 146 | 11 | 13 | 89 | 95 | 49 | 11 | 127 | 29 | | | | | | | | |
| | Sidewalk B | 18 | 19 | 9 | 59 | 66 | 65 | 35 | 32 | 15 | 13 | 99 | 18 | | | | | | | | |
| | Sidewalk C | 22 | 71 | 9 | 8 | 81 | 74 | 32 | 32 | 105 | 27 | 5 | 5 | | | | | | | | |
| | Sidewalk D | 25 | 48 | 40 | 228 | 84 | 84 | 148 | 145 | 44 | 22 | 266 | 51 | | | | | | | | |
| | Corner A & B | 2 | 43 | 0 | 0 | 7 | 8 | 0 | 0 | 25 | 4 | 1 | 0 | | | | | | | | |
| | Corner C & D | 0 | 0 | -1 | 0 | 0 | 0 | 0 | 0 | 0 | 0 | 0 | 0 | | | | | | | | |
| | Crosswalk (A-B-C) | 13 | 44 | 14 | 34 | 51 | 51 | 50 | 46 | 64 | 17 | 51 | 12 | | | | | | | | |
| | Crosswalk (C-D-A) | 28 | 97 | 37 | 180 | 97 | 88 | 134 | 141 | 151 | 34 | 158 | 41 | | | | | | | | |
| ***Seventh Ave & W. 34th St*** | Sidewalk A | 9 | 53 | 20 | 50 | -1 | 30 | 60 | 57 | 36 | 35 | 56 | 17 | | | | | | | | |
| | Sidewalk B | 17 | 17 | 5 | 67 | 53 | 49 | 11 | 43 | 17 | 11 | 19 | 31 | | | | | | | | |
| | Sidewalk C | 8 | 43 | 15 | 16 | 14 | 36 | 49 | 49 | 50 | 32 | 12 | 10 | | | | | | | | |
| | Sidewalk D | 22 | 144 | 14 | 103 | 73 | 78 | 17 | 41 | 124 | 27 | 101 | 42 | | | | | | | | |
| | Corner A & B | -1 | -2 | 1 | 0 | -4 | -4 | 4 | 0 | 0 | 0 | 5 | 0 | | | | | | | | |
| | Corner C & D | 0 | 0 | 14 | 0 | 0 | 0 | 8 | 2 | 0 | 0 | 2 | 4 | | | | | | | | |
| | Crosswalk (A-B-C) | 7 | 63 | 16 | 23 | 5 | 37 | 53 | 50 | 27 | 35 | 18 | 10 | | | | | | | | |
| | Crosswalk (C-D-A) | 10 | 52 | 19 | 70 | 16 | 33 | 60 | 59 | 62 | 31 | 56 | 18 | | | | | | | | |
| ***Sixth Ave & W. 33rd St*** | Sidewalk A | 3 | 29 | 3 | 4 | 13 | 12 | 0 | 0 | 49 | 9 | 6 | 4 | | | | | | | | |
| | Sidewalk B | 5 | 11 | 2 | 29 | 16 | 2 | 9 | 12 | 60 | 5 | 35 | 9 | | | | | | | | |
| | Sidewalk C | 2 | 30 | 122 | 9 | 9 | 12 | 14 | 14 | 36 | 9 | 18 | 129 | | | | | | | | |
| | Sidewalk D | 136 | 10 | 11 | 61 | 17 | 16 | 23 | 16 | 19 | 144 | 102 | 22 | | | | | | | | |
| | Corner A & B | 1 | 0 | 0 | 0 | 0 | 0 | 0 | 0 | 0 | 0 | 0 | 0 | | | | | | | | |
| | Corner C & D | 0 | 0 | 135 | 10 | 0 | 0 | 15 | 15 | 0 | 0 | 19 | 144 | | | | | | | | |
| | Crosswalk (A-B-C) | 3 | 29 | 5 | 11 | 13 | 12 | 12 | 2 | 49 | 10 | 46 | 5 | | | | | | | | |
| | Crosswalk (C-D-A) | 16 | 161 | 2 | 4 | 35 | 28 | 0 | 0 | 211 | 33 | 5 | 4 | | | | | | | | |
| ***Sixth Ave & W. 34th St*** | Sidewalk A | 2 | 21 | 2 | 3 | 2 | 26 | 0 | 0 | 19 | 26 | 4 | 4 | 0 | 0 | 0 | 0 | 0 | 0 | 0 | 0 |
| | Sidewalk B | 6 | 17 | 2 | 14 | 16 | 5 | 2 | 23 | 59 | 5 | 19 | 25 | 1 | 1 | 1 | 1 | 2 | 1 | 14 | 3 |
| | Sidewalk C | 2 | 14 | 5 | 11 | 2 | 23 | 17 | 2 | 19 | 25 | 59 | 5 | 1 | 1 | 1 | 1 | 14 | 3 | 2 | 1 |
| | Sidewalk D | 2 | 4 | 2 | 14 | 0 | 0 | 2 | 23 | 4 | 4 | 19 | 25 | 0 | 0 | 0 | 0 | 0 | 0 | 0 | 0 |
| | Corner A & B | 0 | 0 | 0 | 0 | 0 | 0 | 0 | 0 | 0 | 0 | 0 | 0 | 0 | 0 | 0 | 0 | 0 | 0 | 0 | 0 |
| | Corner C & D | 0 | 0 | 0 | 0 | 0 | 0 | 0 | 0 | 0 | 0 | 0 | 0 | 0 | 0 | 0 | 0 | 0 | 0 | 0 | 0 |
| | Crosswalk (A-B-C) | 2 | 21 | 5 | 11 | 2 | 25 | 17 | 2 | 20 | 26 | 59 | 5 | 1 | 1 | 1 | 1 | 14 | 3 | 2 | 1 |
| | Crosswalk (C-D-A) | 2 | 14 | 2 | 4 | 2 | 23 | 0 | 0 | 19 | 25 | 4 | 3 | 1 | 1 | 0 | 0 | 14 | 3 | 0 | 0 |
| ***Broadway & W. 34th St*** | Sidewalk A | 5 | 54 | 13 | 46 | 10 | 35 | 54 | 61 | 42 | 30 | 24 | 13 | 2 | 32 | 1 | 2 | 24 | 27 | 10 | 11 |
| | Sidewalk B | 13 | 13 | 3 | 21 | 49 | 49 | 2 | 25 | 9 | 9 | 20 | 26 | 0 | 0 | 0 | 0 | 0 | 0 | 0 | 0 |
| | Sidewalk C | 3 | 14 | 14 | 14 | 2 | 23 | 49 | 49 | 20 | 26 | 10 | 10 | 0 | 0 | 0 | 0 | 0 | 0 | 0 | 0 |
| | Sidewalk D | 16 | 33 | 3 | 14 | 62 | 60 | 3 | 24 | 51 | 13 | 19 | 25 | 2 | 1 | 1 | 88 | 13 | 9 | 35 | 69 |
| | Corner A & B | 1 | 0 | 0 | 0 | 0 | 1 | 0 | 0 | 0 | 0 | 0 | 0 | 0 | 10 | 0 | 0 | 8 | 0 | 0 | 0 |
| | Corner C & D | 0 | 0 | 0 | 0 | 0 | 0 | 0 | 0 | 0 | 0 | 0 | 0 | 0 | 0 | 0 | 0 | 0 | 0 | 0 | 0 |
| | Crosswalk (A-B-C) | 3 | 21 | 12 | 14 | 3 | 26 | 49 | 49 | 20 | 26 | 9 | 8 | 1 | 1 | 0 | 0 | 15 | 3 | 0 | 0 |
| | Crosswalk (C-D-A) | 3 | 15 | 14 | 34 | 3 | 23 | 62 | 60 | 20 | 25 | 51 | 13 | 2 | 1 | 2 | 1 | 14 | 3 | 12 | 9 |
| ***Blvd & W. 33rd St*** | Sidewalk A | 54 | 178 | 539 | 1742 | 138 | 150 | 595 | 634 | 191 | 68 | 1831 | 645 | 21 | 828 | 74 | 200 | 870 | 32 | 423 | 197 |
| | Sidewalk B | 167 | 164 | 492 | 475 | 353 | 383 | 263 | 294 | 164 | 181 | 429 | 548 | 8 | 114 | 29 | 724 | 168 | 72 | 946 | 54 |
| | Sidewalk C | 376 | 391 | 0 | 0 | 468 | 483 | 0 | 0 | 385 | 393 | 0 | 0 | 43 | 1908 | 0 | 0 | 2084 | 125 | 0 | 0 |
| | Sidewalk D | 0 | 0 | 47 | 215 | 0 | 0 | 218 | 229 | 0 | 0 | 231 | 73 | 0 | 0 | 7 | 1163 | 0 | 0 | 1529 | 30 |
| | Corner A & B | 6 | 4 | 59 | 56 | 43 | 43 | 93 | 92 | 3 | 4 | 64 | 64 | 0 | 58 | 2 | 2 | 215 | 3 | 11 | 12 |
| | Corner C & D | 0 | 0 | 0 | 0 | 0 | 0 | 0 | 0 | 0 | 0 | 0 | 0 | 0 | 0 | 0 | 0 | 0 | 0 | 0 | 0 |
| | Crosswalk (A-B-C) | 750 | 420 | 183 | 581 | 346 | 349 | 412 | 471 | 451 | 796 | 416 | 206 | 38 | 667 | 18 | 189 | 627 | 86 | 557 | 111 |
| | Crosswalk (C-D-A) | 101 | 118 | 277 | 1032 | 190 | 190 | 302 | 336 | 95 | 100 | 1095 | 363 | 10 | 5 | 34 | 301 | 389 | 48 | 359 | 105 |
| ***Blvd & W. 34th St*** | Sidewalk A | 62 | 193 | 764 | 339 | 381 | 378 | 465 | 478 | 243 | 65 | 340 | 819 | 6 | 185 | 24 | 283 | 226 | 35 | 306 | 111 |
| | Sidewalk B | 390 | 217 | 258 | 332 | 322 | 327 | 307 | 339 | 228 | 428 | 295 | 290 | 14 | 221 | 16 | 102 | 310 | 76 | 135 | 56 |
| | Sidewalk C | 46 | 309 | 178 | 614 | 399 | 392 | 348 | 378 | 428 | 59 | 547 | 203 | 51 | 295 | 15 | 116 | 285 | 35 | 185 | 77 |
| | Sidewalk D | 227 | 224 | 37 | 416 | 356 | 357 | 264 | 309 | 208 | 212 | 406 | 131 | 48 | 170 | 10 | 679 | 309 | 74 | 603 | 75 |
| | Corner A & B | 3 | 2 | 6 | 4 | 6 | 6 | 8 | 11 | 2 | 2 | 5 | 21 | 0 | 127 | 0 | 1 | 111 | 3 | 2 | 5 |
| | Corner C & D | 0 | 0 | 4 | 3 | 0 | 0 | 11 | 11 | 0 | 0 | 3 | 2 | 0 | 46 | 0 | 2 | 48 | 0 | 3 | 5 |
| | Crosswalk (A-B-C) | 265 | 289 | 228 | 301 | 385 | 387 | 427 | 460 | 335 | 287 | 203 | 248 | 19 | 182 | 11 | 139 | 244 | 49 | 207 | 82 |
| | Crosswalk (C-D-A) | 398 | 299 | 341 | 140 | 389 | 386 | 475 | 491 | 410 | 430 | 105 | 401 | 52 | 322 | 8 | 210 | 312 | 44 | 251 | 82 |
| ***Blvd & W. 35th St*** | Sidewalk A | 98 | 322 | 517 | 192 | 206 | 204 | 743 | 754 | 314 | 84 | 140 | 495 | 9 | 305 | 15 | 556 | 149 | 32 | 202 | 111 |
| | Sidewalk B | 396 | 181 | 227 | 261 | 454 | 453 | 249 | 269 | 141 | 346 | 210 | 228 | 14 | 134 | 13 | 15 | 243 | 87 | 75 | 46 |
| | Sidewalk C | 37 | 253 | 332 | 445 | 180 | 216 | 428 | 431 | 236 | 80 | 349 | 265 | 8 | 355 | 16 | 223 | 447 | 23 | 324 | 83 |
| | Sidewalk D | 924 | 466 | 39 | 53 | 781 | 802 | 62 | 103 | 396 | 890 | 9 | 66 | 25 | 283 | 4 | 255 | 331 | 136 | 157 | 10 |
| | Corner A & B | 2 | 1 | 3 | 3 | 8 | 8 | 3 | 3 | 1 | 2 | 2 | 2 | 0 | 268 | 0 | 0 | 54 | 1 | 2 | 2 |
| | Corner C & D | 2 | 21 | 0 | 0 | 4 | 4 | 0 | 0 | 23 | 2 | 1 | 0 | 1 | 175 | 0 | 0 | 200 | 2 | 0 | 0 |
| | Crosswalk (A-B-C) | 316 | 308 | 441 | 270 | 429 | 435 | 405 | 417 | 281 | 292 | 198 | 408 | 17 | 75 | 17 | 80 | 166 | 63 | 169 | 86 |
| | Crosswalk (C-D-A) | 480 | 377 | 794 | 259 | 319 | 365 | 648 | 667 | 306 | 484 | 201 | 771 | 18 | 220 | 18 | 325 | 319 | 50 | 191 | 119 |

# Appendix S.5.2

**NET INCREMENTAL PEDESTRIAN VOLUMES (SIDEWALKS, CORNERS, AND CROSSWALKS)**
**2025 FUTURE WITH THE PROPOSED ACTION**

| Intersection | Elements | Weekday AM Peak 15-Min. | | | | Weekday MD Peak 15-Min. | | | | Weekday PM Peak 15-Min. | | | | Special Events Evening Peak 15-Min. | | | | Special Events Sunday Peak 15-Min. | | | |
|---|---|---|---|---|---|---|---|---|---|---|---|---|---|---|---|---|---|---|---|---|---|
| ***Blvd & W. 36th St*** | Sidewalk A | 40 | 81 | 229 | 140 | 82 | 88 | 542 | 541 | 98 | 66 | 125 | 217 | 12 | 12 | 14 | 19 | 98 | 37 | 131 | 83 |
| | Sidewalk B | 189 | 145 | 38 | 80 | 351 | 342 | 102 | 109 | 132 | 165 | 106 | 60 | 16 | 18 | 11 | 10 | 145 | 89 | 96 | 37 |
| | Sidewalk C | 36 | 101 | 310 | 260 | 151 | 157 | 416 | 414 | 121 | 61 | 139 | 189 | 12 | 245 | 13 | 132 | 318 | 39 | 242 | 81 |
| | Sidewalk D | 253 | 231 | 190 | 176 | 639 | 638 | 86 | 83 | 200 | 208 | 86 | 101 | 12 | 313 | 19 | 78 | 190 | 89 | 164 | 49 |
| | Corner A & B | 5 | 4 | 3 | 2 | 13 | 13 | 3 | 3 | 8 | 8 | 1 | 1 | 2 | 3 | 0 | 0 | 32 | 5 | 2 | 2 |
| | Corner C & D | 8 | 28 | 0 | 0 | 52 | 52 | 0 | 0 | 29 | 7 | 0 | 0 | 1 | 118 | 0 | 0 | 143 | 6 | 0 | 0 |
| | Crosswalk (A-B-C) | 50 | 95 | 195 | 149 | 124 | 129 | 355 | 347 | 114 | 73 | 129 | 191 | 14 | 12 | 14 | 16 | 108 | 46 | 137 | 83 |
| | Crosswalk (C-D-A) | 164 | 225 | 260 | 174 | 175 | 174 | 591 | 589 | 161 | 87 | 164 | 248 | 18 | 134 | 14 | 20 | 224 | 52 | 140 | 96 |
| ***Blvd & W. 37th St*** | Sidewalk A | 52 | 91 | 204 | 478 | 218 | 220 | 556 | 555 | 92 | 43 | 440 | 209 | 6 | 7 | 17 | 19 | 101 | 32 | 139 | 83 |
| | Sidewalk B | 182 | 151 | 84 | 109 | 339 | 335 | 265 | 263 | 137 | 152 | 125 | 68 | 17 | 25 | 12 | 10 | 139 | 99 | 146 | 56 |
| | Sidewalk C | 17 | 74 | 209 | 155 | 49 | 55 | 320 | 314 | 88 | 24 | 145 | 187 | 3 | 2 | 17 | 20 | 57 | 13 | 146 | 100 |
| | Sidewalk D | 216 | 564 | 29 | 23 | 555 | 549 | 21 | 29 | 553 | 212 | 14 | 28 | 20 | 21 | 2 | 4 | 153 | 91 | 72 | 15 |
| | Corner A & B | 1 | 1 | 1 | 1 | 7 | 7 | 1 | 1 | 1 | 1 | 1 | 1 | 0 | 2 | 0 | 0 | 27 | 1 | 1 | 1 |
| | Corner C & D | 3 | 11 | 0 | 5 | 3 | 3 | 1 | 1 | 12 | 3 | 5 | 0 | 0 | 0 | 0 | 0 | 21 | 2 | 0 | 0 |
| | Crosswalk (A-B-C) | 93 | 129 | 204 | 162 | 329 | 329 | 315 | 308 | 138 | 74 | 153 | 177 | 11 | 14 | 18 | 22 | 132 | 65 | 162 | 100 |
| | Crosswalk (C-D-A) | 39 | 108 | 246 | 519 | 80 | 85 | 546 | 543 | 120 | 39 | 487 | 241 | 5 | 5 | 19 | 22 | 83 | 25 | 156 | 95 |
| ***Blvd & W. 38th St*** | Sidewalk A | 49 | 93 | 188 | 747 | 209 | 216 | 420 | 418 | 93 | 46 | 695 | 196 | 5 | 5 | 27 | 22 | 98 | 31 | 169 | 85 |
| | Sidewalk B | 140 | 170 | 45 | 139 | 232 | 233 | 250 | 262 | 146 | 114 | 116 | 49 | 16 | 20 | 10 | 7 | 156 | 96 | 74 | 37 |
| | Sidewalk C | 38 | 130 | 188 | 170 | 148 | 152 | 298 | 297 | 139 | 40 | 142 | 165 | 10 | 18 | 19 | 29 | 71 | 28 | 135 | 102 |
| | Sidewalk D | 179 | 943 | 53 | 38 | 507 | 505 | 38 | 47 | 885 | 185 | 25 | 54 | 31 | 23 | 4 | 7 | 150 | 80 | 83 | 27 |
| | Corner A & B | 0 | 0 | 2 | 0 | 0 | 0 | 1 | 1 | 0 | 0 | 1 | 2 | 0 | 0 | 0 | 1 | 37 | 0 | 1 | 1 |
| | Corner C & D | 5 | 10 | 1 | 18 | 48 | 48 | 3 | 2 | 10 | 4 | 21 | 1 | 1 | 7 | 0 | 0 | 22 | 4 | 1 | 0 |
| | Crosswalk (A-B-C) | 74 | 164 | 161 | 194 | 296 | 307 | 242 | 244 | 138 | 66 | 162 | 138 | 11 | 8 | 19 | 22 | 109 | 52 | 136 | 96 |
| | Crosswalk (C-D-A) | 72 | 214 | 209 | 815 | 162 | 167 | 451 | 454 | 213 | 67 | 755 | 230 | 16 | 16 | 24 | 19 | 100 | 48 | 158 | 83 |

# Appendix S.5.2

**PEDESTRIAN VOLUMES (SIDEWALKS, CORNERS, AND CROSSWALKS)**
**2010 FUTURE WITH THE PROPOSED ACTION**

| Intersection | Elements | Weekday AM Peak 15-Min. | | | | Weekday MD Peak 15-Min. | | | | Weekday PM Peak 15-Min. | | | | Special Events Evening Peak 15-Min. | | | | Special Events Sunday Peak 15-Min. | | | |
|---|---|---|---|---|---|---|---|---|---|---|---|---|---|---|---|---|---|---|---|---|---|
| ***Rt 9A & West 30th St*** | Sidewalk A | 0 | 0 | 22 | 40 | 0 | 0 | 12 | 20 | 0 | 0 | 34 | 18 | 0 | 0 | 17 | 13 | 0 | 0 | 20 | 26 |
| | Sidewalk B | 0 | 0 | 0 | 0 | 2 | 0 | 0 | 0 | 0 | 6 | 1 | 1 | 4 | 5 | 4 | 3 | 0 | 7 | 2 | 1 |
| | Sidewalk C | 2 | 0 | 2 | 2 | 1 | 0 | 1 | 1 | 1 | 2 | 1 | 1 | 0 | 0 | 1 | 2 | 1 | 1 | 0 | 0 |
| | Sidewalk D | 20 | 26 | 0 | 0 | 13 | 20 | 0 | 0 | 31 | 18 | 0 | 0 | 17 | 14 | 0 | 0 | 20 | 26 | 0 | 0 |
| | Corner A & B | 0 | 0 | 0 | 0 | 0 | 0 | 0 | 0 | 0 | 0 | 4 | 0 | 0 | 0 | 4 | 2 | 0 | 0 | 1 | 0 |
| | Corner C & D | 0 | 0 | 0 | 0 | 0 | 0 | 0 | 0 | 0 | 0 | 0 | 0 | 0 | 0 | 0 | 0 | 0 | 0 | 0 | 0 |
| | Crosswalk (A-B-C) | 0 | 0 | 1 | 0 | 0 | 0 | 1 | 2 | 0 | 0 | 0 | 5 | 0 | 0 | 2 | 1 | 0 | 1 | 0 | 6 |
| | Crosswalk (C-D-A) | 6 | 2 | 24 | 36 | 1 | 1 | 14 | 31 | 2 | 2 | 28 | 31 | 0 | 0 | 24 | 14 | 0 | 2 | 20 | 24 |
| ***Rt 9A & West 34th St*** | Sidewalk A | 1 | 1 | 0 | 7 | 0 | 0 | 4 | 6 | 0 | 0 | 6 | 3 | 0 | 0 | 0 | 1074 | 0 | 0 | 1092 | 19 |
| | Sidewalk B | 0 | 3 | 4 | 10 | 1 | 6 | 11 | 17 | 7 | 1 | 8 | 13 | 1 | 605 | 0 | 2 | 612 | 3 | 3 | 0 |
| | Sidewalk C | 31 | 21 | 0 | 0 | 61 | 49 | 2 | 0 | 46 | 60 | 0 | 0 | 1680 | 2 | 1 | 0 | 66 | 1739 | 5 | 0 |
| | Sidewalk D | 9 | 2 | 0 | 0 | 2 | 3 | 2 | 0 | 3 | 0 | 0 | 0 | 0 | 0 | 0 | 0 | 16 | 19 | 0 | 0 |
| | Corner A & B | 3 | 0 | 3 | 1 | 7 | 7 | 7 | 8 | 3 | 13 | 5 | 13 | 0 | 0 | 0 | 4 | 0 | 0 | 3 | 0 |
| | Corner C & D | 3 | 0 | 3 | 0 | 4 | 3 | 4 | 3 | 2 | 9 | 2 | 8 | 0 | 0 | 0 | 0 | 0 | 0 | 0 | 0 |
| | Crosswalk (A-B-C) | 3 | 8 | 0 | 3 | 9 | 10 | 3 | 2 | 8 | 7 | 11 | 0 | 0 | 0 | 1 | 605 | 0 | 0 | 611 | 0 |
| | Crosswalk (C-D-A) | 32 | 19 | 0 | 4 | 61 | 48 | 3 | 4 | 46 | 48 | 0 | 3 | 1074 | 0 | 9 | 14 | 67 | 1133 | 13 | 13 |
| ***Rt 9A & West 39th St*** | Sidewalk A | 0 | 0 | 0 | 0 | 0 | 0 | 0 | 0 | 0 | 0 | 0 | 0 | | | | | | | | |
| | Sidewalk B | 0 | 0 | 0 | 0 | 7 | 4 | 0 | 0 | 3 | 0 | 0 | 0 | | | | | | | | |
| | Sidewalk C | 15 | 12 | 1 | 5 | 41 | 43 | 10 | 7 | 25 | 36 | 11 | 0 | | | | | | | | |
| | Sidewalk D | 0 | 3 | 0 | 0 | 1 | 13 | 0 | 0 | 6 | 2 | 0 | 0 | | | | | | | | |
| | Corner A & B | 1 | 2 | 0 | 0 | 0 | 0 | 0 | 0 | 0 | 0 | 0 | 0 | | | | | | | | |
| | Corner C & D | 0 | 0 | 0 | 0 | 0 | 0 | 0 | 0 | 0 | 2 | 0 | 0 | | | | | | | | |
| | Crosswalk (A-B-C) | 2 | 0 | 0 | 0 | 0 | 0 | 6 | 3 | 0 | 0 | 3 | 0 | | | | | | | | |
| | Crosswalk (C-D-A) | 26 | 16 | 33 | 43 | 34 | 33 | 30 | 16 | 22 | 43 | 40 | 29 | | | | | | | | |
| ***Rt 9A & West 40th St*** | Sidewalk A | 0 | 0 | 0 | 0 | 0 | 1 | 1 | 0 | 1 | 3 | 0 | 0 | | | | | | | | |
| | Sidewalk B | 0 | 1 | 1 | 0 | 3 | 0 | 0 | 2 | 3 | 0 | 0 | 3 | | | | | | | | |
| | Sidewalk C | 0 | 0 | 0 | 0 | 0 | 1 | 2 | 0 | 0 | 0 | 1 | 0 | | | | | | | | |
| | Sidewalk D | 0 | 0 | 0 | 0 | 0 | 0 | 0 | 0 | 0 | 0 | 0 | 0 | | | | | | | | |
| | Corner A & B | 0 | 0 | 0 | 1 | 0 | 0 | 0 | 1 | 0 | 0 | 1 | 0 | | | | | | | | |
| | Corner C & D | 0 | 0 | 0 | 0 | 1 | 0 | 0 | 0 | 0 | 0 | 0 | 0 | | | | | | | | |
| | Crosswalk (A-B-C) | 0 | 0 | 2 | 0 | 0 | 0 | 1 | 4 | 0 | 0 | 1 | 0 | | | | | | | | |
| | Crosswalk (C-D-A) | 0 | 2 | 26 | 47 | 0 | 1 | 20 | 18 | 1 | 2 | 43 | 36 | | | | | | | | |
| ***Rt 9A & West 42nd St*** | Sidewalk A | 2 | 0 | 4 | 0 | 2 | 6 | 1 | 1 | 28 | 0 | 0 | 1 | | | | | | | | |
| | Sidewalk B | 4 | 10 | 24 | 40 | 10 | 18 | 61 | 72 | 4 | 25 | 65 | 49 | | | | | | | | |
| | Sidewalk C | 32 | 38 | 0 | 5 | 53 | 54 | 6 | 2 | 62 | 49 | 10 | 4 | | | | | | | | |
| | Sidewalk D | 2 | 3 | 0 | 3 | 0 | 0 | 2 | 2 | 0 | 7 | 1 | 0 | | | | | | | | |
| | Corner A & B | 0 | 0 | 4 | 5 | 3 | 0 | 14 | 6 | 23 | 0 | 6 | 1 | | | | | | | | |
| | Corner C & D | 4 | 0 | 0 | 0 | 0 | 1 | 0 | 0 | 2 | 4 | 0 | 0 | | | | | | | | |
| | Crosswalk (A-B-C) | 24 | 30 | 1 | 13 | 50 | 63 | 8 | 7 | 57 | 53 | 2 | 17 | | | | | | | | |
| | Crosswalk (C-D-A) | 27 | 31 | 32 | 46 | 49 | 51 | 35 | 35 | 38 | 48 | 14 | 16 | | | | | | | | |
| ***Eleventh Ave & West 29th*** | Sidewalk A | 0 | 0 | 31 | 4 | 2 | 1 | 40 | 31 | 0 | 4 | 29 | 58 | | | | | | | | |
| | Sidewalk B | 51 | 9 | 3 | 51 | 56 | 91 | 22 | 31 | 28 | 95 | 86 | 25 | | | | | | | | |
| | Sidewalk C | 4 | 9 | 28 | 10 | 16 | 6 | 47 | 70 | 12 | 2 | 19 | 46 | | | | | | | | |
| | Sidewalk D | 7 | 2 | 0 | 0 | 33 | 24 | 0 | 0 | 16 | 16 | 5 | 2 | | | | | | | | |
| | Corner A & B | 0 | 0 | 24 | 1 | 0 | 0 | 17 | 9 | 0 | 1 | 12 | 41 | | | | | | | | |
| | Corner C & D | 0 | 4 | 0 | 0 | 3 | 4 | 0 | 0 | 2 | 3 | 1 | 0 | | | | | | | | |
| | Crosswalk (A-B-C) | 2 | 26 | 25 | 5 | 5 | 13 | 42 | 78 | 41 | 12 | 16 | 51 | | | | | | | | |
| | Crosswalk (C-D-A) | 0 | 0 | 8 | 4 | 2 | 1 | 31 | 27 | 2 | 0 | 18 | 15 | | | | | | | | |
| ***Eleventh Ave & West 30th*** | Sidewalk A | 2 | 12 | 30 | 4 | 13 | 15 | 42 | 34 | 29 | 17 | 28 | 49 | 0 | 0 | 1 | 2 | 0 | 0 | 6 | 10 |
| | Sidewalk B | 34 | 8 | 12 | 13 | 56 | 96 | 66 | 91 | 23 | 59 | 28 | 28 | 8 | 10 | 6 | 759 | 30 | 40 | 1220 | 26 |
| | Sidewalk C | 7 | 5 | 55 | 7 | 14 | 13 | 73 | 113 | 8 | 11 | 44 | 100 | 3 | 32 | 75 | 8 | 124 | 8 | 35 | 173 |
| | Sidewalk D | 32 | 7 | 1 | 0 | 56 | 44 | 3 | 2 | 31 | 58 | 5 | 0 | 165 | 1 | 0 | 1 | 10 | 330 | 2 | 0 |
| | Corner A & B | 0 | 5 | 3 | 4 | 18 | 14 | 30 | 24 | 4 | 13 | 9 | 11 | 0 | 0 | 3 | 0 | 0 | 0 | 4 | 7 |
| | Corner C & D | 4 | 4 | 0 | 4 | 14 | 12 | 14 | 9 | 2 | 14 | 2 | 8 | 1 | 1 | 0 | 0 | 4 | 2 | 0 | 0 |
| | Crosswalk (A-B-C) | 5 | 26 | 16 | 4 | 34 | 49 | 71 | 64 | 50 | 15 | 31 | 29 | 1 | 807 | 53 | 2 | 1202 | 10 | 13 | 18 |
| | Crosswalk (C-D-A) | 1 | 19 | 52 | 4 | 6 | 8 | 60 | 56 | 30 | 7 | 38 | 82 | 2 | 52 | 216 | 3 | 243 | 1 | 10 | 570 |
| ***Eleventh Ave & West 33rd*** | Sidewalk A | 0 | 1 | 24 | 39 | 2 | 0 | 46 | 39 | 0 | 0 | 93 | 32 | 0 | 0 | 2 | 3444 | 0 | 1 | 3942 | 28 |
| | Sidewalk B | 45 | 15 | 13 | 27 | 141 | 133 | 69 | 110 | 48 | 63 | 47 | 58 | 17 | 6 | 5 | 694 | 558 | 56 | 873 | 47 |
| | Sidewalk C | 2 | 26 | 31 | 6 | 5 | 24 | 53 | 73 | 36 | 29 | 24 | 42 | 2 | 3048 | 3 | 8 | 2972 | 16 | 20 | 27 |
| | Sidewalk D | 19 | 6 | 1 | 4 | 24 | 16 | 0 | 0 | 10 | 19 | 1 | 0 | 4 | 4 | 0 | 1 | 2 | 7 | 0 | 2 |
| | Corner A & B | 0 | 0 | 10 | 11 | 1 | 0 | 83 | 66 | 0 | 0 | 29 | 19 | 0 | 0 | 4 | 9 | 0 | 0 | 35 | 31 |
| | Corner C & D | 0 | 0 | 0 | 0 | 1 | 0 | 0 | 0 | 0 | 1 | 0 | 0 | 0 | 0 | 1 | 0 | 0 | 2 | 0 | 0 |
| | Crosswalk (A-B-C) | 5 | 23 | 38 | 6 | 5 | 25 | 56 | 73 | 29 | 34 | 31 | 46 | 1 | 681 | 3 | 7 | 1352 | 15 | 27 | 34 |
| | Crosswalk (C-D-A) | 5 | 22 | 20 | 10 | 5 | 20 | 26 | 16 | 36 | 25 | 20 | 16 | 0 | 3048 | 2 | 2 | 2965 | 10 | 12 | 14 |
| ***Eleventh Ave & West 34th*** | Sidewalk A | 8 | 18 | 84 | 11 | 15 | 31 | 83 | 8 | 12 | 15 | 178 | 4 | 11 | 5 | 3 | 369 | 9 | 5 | 968 | 115 |
| | Sidewalk B | 85 | 23 | 76 | 29 | 176 | 145 | 196 | 194 | 79 | 87 | 53 | 113 | 6 | 463 | 3 | 206 | 1111 | 67 | 298 | 83 |
| | Sidewalk C | 13 | 101 | 59 | 16 | 40 | 113 | 134 | 128 | 75 | 180 | 52 | 61 | 41 | 504 | 97 | 4 | 541 | 129 | 554 | 74 |
| | Sidewalk D | 24 | 42 | 36 | 21 | 58 | 57 | 74 | 52 | 133 | 34 | 51 | 59 | 3 | 3443 | 1681 | 3 | 3943 | 27 | 67 | 1739 |
| | Corner A & B | 1 | 2 | 6 | 2 | 0 | 2 | 75 | 70 | 0 | 0 | 17 | 5 | 2 | 0 | 2 | 1 | 1 | 0 | 13 | 16 |
| | Corner C & D | 1 | 1 | 0 | 5 | 1 | 7 | 5 | 5 | 0 | 6 | 29 | 0 | 0 | 25 | 3 | 1681 | 50 | 3 | 1875 | 0 |
| | Crosswalk (A-B-C) | 93 | 49 | 87 | 24 | 65 | 78 | 166 | 143 | 40 | 128 | 104 | 92 | 5 | 182 | 4 | 487 | 418 | 72 | 1034 | 83 |
| | Crosswalk (C-D-A) | 19 | 78 | 71 | 28 | 52 | 100 | 93 | 56 | 76 | 157 | 150 | 71 | 10 | 981 | 1 | 792 | 949 | 88 | 1292 | 102 |
| ***Eleventh Ave & West 35th*** | Sidewalk A | 0 | 0 | 12 | 14 | 0 | 0 | 67 | 14 | 0 | 0 | 42 | 7 | | | | | | | | |
| | Sidewalk B | 138 | 177 | 1 | 4 | 121 | 110 | 8 | 15 | 77 | 33 | 3 | 13 | | | | | | | | |
| | Sidewalk C | 6 | 21 | 160 | 178 | 1 | 51 | 158 | 123 | 0 | 58 | 128 | 30 | | | | | | | | |
| | Sidewalk D | 86 | 10 | 0 | 0 | 86 | 7 | 0 | 0 | 180 | 5 | 0 | 0 | | | | | | | | |
| | Corner A & B | 0 | 0 | 0 | 1 | 0 | 0 | 0 | 1 | 0 | 0 | 2 | 0 | | | | | | | | |
| | Corner C & D | 0 | 1 | 0 | 0 | 0 | 0 | 0 | 0 | 0 | 0 | 0 | 0 | | | | | | | | |
| | Crosswalk (A-B-C) | 1 | 5 | 137 | 178 | 4 | 18 | 131 | 120 | 3 | 15 | 76 | 32 | | | | | | | | |
| | Crosswalk (C-D-A) | 6 | 47 | 4 | 4 | 5 | 72 | 4 | 5 | 1 | 111 | 5 | 6 | | | | | | | | |
| ***Eleventh Ave & West 36th*** | Sidewalk A | 0 | 0 | 14 | 12 | 0 | 0 | 72 | 11 | 0 | 0 | 44 | 5 | | | | | | | | |
| | Sidewalk B | 6 | 46 | 1 | 3 | 95 | 85 | 4 | 13 | 58 | 20 | 1 | 9 | | | | | | | | |
| | Sidewalk C | 5 | 4 | 206 | 718 | 2 | 10 | 138 | 130 | 3 | 10 | 145 | 109 | | | | | | | | |
| | Sidewalk D | 13 | 14 | 0 | 0 | 64 | 13 | 0 | 0 | 43 | 6 | 0 | 0 | | | | | | | | |
| | Corner A & B | 0 | 0 | 1 | 0 | 0 | 0 | 1 | 0 | 0 | 0 | 1 | 0 | | | | | | | | |
| | Corner C & D | 0 | 0 | 0 | 0 | 0 | 0 | 0 | 0 | 1 | 0 | 0 | 0 | | | | | | | | |
| | Crosswalk (A-B-C) | 1 | 4 | 7 | 48 | 0 | 9 | 97 | 86 | 0 | 9 | 60 | 18 | | | | | | | | |
| | Crosswalk (C-D-A) | 5 | 67 | 0 | 0 | 3 | 60 | 0 | 9 | 6 | 126 | 4 | 5 | | | | | | | | |

# Appendix S.5.2

**PEDESTRIAN VOLUMES (SIDEWALKS, CORNERS, AND CROSSWALKS)**
**2010 FUTURE WITH THE PROPOSED ACTION**

| Intersection | Elements | Weekday AM Peak 15-Min. | | | | Weekday MD Peak 15-Min. | | | | Weekday PM Peak 15-Min. | | | | Special Events Evening Peak 15-Min. | | | | Special Events Sunday Peak 15-Min. | | | |
|---|---|---|---|---|---|---|---|---|---|---|---|---|---|---|---|---|---|---|---|---|---|
| *Eleventh Ave & West 37th* | Sidewalk A | 2 | 2 | 12 | 14 | 1 | 1 | 85 | 1 | 0 | 0 | 49 | 4 | | | | | | | | |
| | Sidewalk B | 5 | 20 | 2 | 27 | 75 | 79 | 9 | 19 | 34 | 20 | 28 | 10 | | | | | | | | |
| | Sidewalk C | 2 | 3 | 6 | 45 | 2 | 12 | 79 | 70 | 0 | 10 | 56 | 13 | | | | | | | | |
| | Sidewalk D | 10 | 11 | 0 | 0 | 75 | 4 | 0 | 3 | 41 | 8 | 1 | 3 | | | | | | | | |
| | Corner A & B | 0 | 1 | 0 | 0 | 0 | 0 | 0 | 1 | 0 | 0 | 4 | 2 | | | | | | | | |
| | Corner C & D | 0 | 1 | 0 | 0 | 1 | 0 | 0 | 0 | 1 | 0 | 0 | 0 | | | | | | | | |
| | Crosswalk (A-B-C) | 1 | 5 | 7 | 45 | 2 | 8 | 79 | 77 | 2 | 10 | 57 | 14 | | | | | | | | |
| | Crosswalk (C-D-A) | 1 | 3 | 1 | 4 | 6 | 17 | 0 | 0 | 0 | 9 | 1 | 1 | | | | | | | | |
| *Eleventh Ave & West 38th* | Sidewalk A | 0 | 0 | 16 | 17 | 1 | 2 | 102 | 3 | 0 | 0 | 59 | 2 | | | | | | | | |
| | Sidewalk B | 1 | 3 | 4 | 17 | 16 | 16 | 6 | 15 | 3 | 2 | 15 | 10 | | | | | | | | |
| | Sidewalk C | 1 | 4 | 4 | 19 | 0 | 14 | 60 | 53 | 0 | 11 | 26 | 10 | | | | | | | | |
| | Sidewalk D | 12 | 13 | 4 | 0 | 85 | 1 | 3 | 2 | 49 | 1 | 11 | 1 | | | | | | | | |
| | Corner A & B | 0 | 0 | 0 | 0 | 0 | 0 | 0 | 0 | 0 | 0 | 0 | 0 | | | | | | | | |
| | Corner C & D | 0 | 0 | 0 | 0 | 0 | 0 | 0 | 0 | 0 | 0 | 0 | 0 | | | | | | | | |
| | Crosswalk (A-B-C) | 1 | 3 | 2 | 15 | 14 | 12 | 27 | 24 | 1 | 9 | 18 | 3 | | | | | | | | |
| | Crosswalk (C-D-A) | 1 | 3 | 0 | 3 | 1 | 9 | 4 | 2 | 0 | 17 | 2 | 1 | | | | | | | | |
| *Eleventh Ave & West 39th* | Sidewalk A | 0 | 1 | 19 | 94 | 5 | 7 | 121 | 4 | 2 | 2 | 66 | 4 | 1 | 0 | 8 | 129 | 0 | 0 | 206 | 17 |
| | Sidewalk B | 2 | 5 | 1 | 3 | 12 | 12 | 1 | 28 | 7 | 4 | 0 | 10 | 0 | 275 | 6 | 20 | 467 | 4 | 134 | 1 |
| | Sidewalk C | 15 | 19 | 6 | 6 | 30 | 40 | 12 | 12 | 23 | 38 | 4 | 3 | 4 | 17 | 1 | 307 | 262 | 43 | 660 | 4 |
| | Sidewalk D | 16 | 55 | 16 | 11 | 108 | 3 | 31 | 30 | 59 | 3 | 24 | 31 | 7 | 128 | 301 | 0 | 295 | 15 | 48 | 340 |
| | Corner A & B | 0 | 1 | 0 | 1 | 0 | 0 | 0 | 0 | 5 | 0 | 5 | 0 | 8 | 4 | 0 | 3 | 0 | 0 | 0 | 0 |
| | Corner C & D | 0 | 1 | 0 | 1 | 0 | 0 | 0 | 0 | 4 | 0 | 2 | 0 | 0 | 17 | 0 | 0 | 102 | 0 | 0 | 0 |
| | Crosswalk (A-B-C) | 1 | 4 | 5 | 3 | 14 | 13 | 15 | 12 | 0 | 9 | 6 | 4 | 1 | 1 | 0 | 294 | 74 | 1 | 535 | 4 |
| | Crosswalk (C-D-A) | 15 | 14 | 19 | 91 | 30 | 41 | 114 | 5 | 23 | 37 | 64 | 2 | 1 | 9 | 15 | 133 | 141 | 40 | 252 | 18 |
| *Eleventh Ave & West 40th* | Sidewalk A | 5 | 6 | 32 | 37 | 3 | 0 | 146 | 4 | 2 | 1 | 145 | 10 | | | | | | | | |
| | Sidewalk B | 5 | 3 | 4 | 12 | 7 | 8 | 3 | 38 | 25 | 3 | 0 | 33 | | | | | | | | |
| | Sidewalk C | 0 | 1 | 1 | 2 | 0 | 1 | 8 | 9 | 1 | 6 | 13 | 9 | | | | | | | | |
| | Sidewalk D | 24 | 24 | 0 | 1 | 127 | 19 | 4 | 4 | 165 | 4 | 1 | 0 | | | | | | | | |
| | Corner A & B | 7 | 12 | 7 | 6 | 0 | 6 | 0 | 3 | 1 | 0 | 0 | 0 | | | | | | | | |
| | Corner C & D | 6 | 6 | 6 | 6 | 0 | 3 | 0 | 3 | 0 | 0 | 0 | 0 | | | | | | | | |
| | Crosswalk (A-B-C) | 3 | 11 | 2 | 2 | 3 | 36 | 6 | 11 | 0 | 33 | 3 | 3 | | | | | | | | |
| | Crosswalk (C-D-A) | 0 | 0 | 27 | 22 | 0 | 5 | 123 | 5 | 8 | 10 | 81 | 2 | | | | | | | | |
| *Eleventh Ave & West 42nd* | Sidewalk A | 112 | 17 | 8 | 52 | 136 | 133 | 30 | 61 | 73 | 145 | 27 | 79 | 46 | 20 | 3 | 26 | 171 | 157 | 107 | 52 |
| | Sidewalk B | 15 | 22 | 150 | 17 | 13 | 28 | 137 | 124 | 5 | 30 | 119 | 143 | 1 | 104 | 82 | 29 | 91 | 17 | 238 | 144 |
| | Sidewalk C | 84 | 62 | 1 | 8 | 94 | 185 | 17 | 8 | 75 | 191 | 2 | 1 | 27 | 46 | 4 | 118 | 192 | 104 | 157 | 4 |
| | Sidewalk D | 57 | 15 | 46 | 22 | 47 | 24 | 67 | 59 | 46 | 27 | 56 | 58 | 33 | 17 | 13 | 5 | 142 | 29 | 97 | 84 |
| | Corner A & B | 3 | 3 | 0 | 0 | 17 | 17 | 0 | 0 | 9 | 9 | 0 | 0 | 1 | 6 | 9 | 0 | 27 | 25 | 5 | 10 |
| | Corner C & D | 3 | 0 | 0 | 0 | 5 | 8 | 4 | 1 | 1 | 1 | 6 | 0 | 2 | 25 | 0 | 0 | 25 | 4 | 0 | 1 |
| | Crosswalk (A-B-C) | 136 | 17 | 30 | 39 | 136 | 130 | 43 | 34 | 98 | 152 | 31 | 36 | 67 | 24 | 19 | 116 | 176 | 135 | 151 | 22 |
| | Crosswalk (C-D-A) | 95 | 59 | 59 | 51 | 95 | 187 | 35 | 56 | 86 | 189 | 40 | 54 | 45 | 25 | 17 | 18 | 182 | 102 | 121 | 30 |
| *Tenth Ave & W. 29th St* | Sidewalk A | 9 | 8 | 35 | 11 | 18 | 29 | 36 | 96 | 6 | 18 | 9 | 68 | | | | | | | | |
| | Sidewalk B | 14 | 10 | 14 | 7 | 20 | 57 | 12 | 51 | 12 | 35 | 7 | 39 | | | | | | | | |
| | Sidewalk C | 13 | 12 | 13 | 4 | 34 | 43 | 29 | 60 | 10 | 25 | 6 | 38 | | | | | | | | |
| | Sidewalk D | 50 | 19 | 17 | 10 | 32 | 129 | 9 | 36 | 11 | 100 | 10 | 35 | | | | | | | | |
| | Corner A & B | 3 | 4 | 2 | 2 | 2 | 5 | 1 | 2 | 6 | 7 | 3 | 3 | | | | | | | | |
| | Corner C & D | 1 | 2 | 5 | 6 | 3 | 1 | 2 | 5 | 5 | 1 | 7 | 4 | | | | | | | | |
| | Crosswalk (A-B-C) | 14 | 11 | 16 | 9 | 13 | 50 | 26 | 81 | 3 | 37 | 9 | 33 | | | | | | | | |
| | Crosswalk (C-D-A) | 25 | 11 | 42 | 4 | 11 | 76 | 30 | 113 | 6 | 51 | 15 | 81 | | | | | | | | |
| *Tenth Ave & W. 30th St* | Sidewalk A | 10 | 24 | 23 | 17 | 72 | 98 | 65 | 114 | 53 | 34 | 29 | 54 | 3 | 3105 | 9 | 1979 | 3693 | 28 | 2107 | 35 |
| | Sidewalk B | 21 | 11 | 12 | 13 | 47 | 95 | 76 | 111 | 14 | 50 | 27 | 39 | 7 | 363 | 3 | 638 | 449 | 33 | 1129 | 34 |
| | Sidewalk C | 9 | 15 | 20 | 12 | 22 | 46 | 39 | 70 | 14 | 26 | 9 | 37 | 7 | 136 | 20 | 11 | 146 | 19 | 25 | 48 |
| | Sidewalk D | 40 | 17 | 11 | 9 | 44 | 125 | 17 | 33 | 12 | 81 | 16 | 29 | 12 | 19 | 8 | 7 | 48 | 52 | 89 | 22 |
| | Corner A & B | 1 | 9 | 1 | 0 | 4 | 9 | 1 | 0 | 17 | 6 | 1 | 1 | 0 | 1968 | 0 | 0 | 2073 | 1 | 0 | 0 |
| | Corner C & D | 0 | 0 | 1 | 0 | 0 | 0 | 0 | 3 | 0 | 0 | 1 | 0 | 2 | 0 | 1 | 1 | 0 | 1 | 0 | 0 |
| | Crosswalk (A-B-C) | 15 | 17 | 22 | 11 | 75 | 126 | 38 | 74 | 30 | 49 | 6 | 39 | 4 | 1139 | 151 | 8 | 1628 | 41 | 25 | 101 |
| | Crosswalk (C-D-A) | 11 | 13 | 33 | 7 | 18 | 48 | 52 | 125 | 12 | 30 | 15 | 72 | 5 | 5 | 11 | 15 | 95 | 19 | 48 | 57 |
| *Tenth Ave & W. 31st St* | Sidewalk A | 0 | 0 | 34 | 4 | 0 | 0 | 71 | 109 | 0 | 0 | 25 | 61 | 0 | 0 | 738 | 38 | 0 | 0 | 54 | 807 |
| | Sidewalk B | 37 | 19 | 15 | 26 | 33 | 76 | 88 | 103 | 16 | 53 | 39 | 35 | 4 | 677 | 3 | 1481 | 732 | 75 | 1649 | 30 |
| | Sidewalk C | 7 | 11 | 30 | 12 | 19 | 24 | 41 | 104 | 19 | 10 | 17 | 62 | 2 | 879 | 6 | 364 | 955 | 7 | 436 | 35 |
| | Sidewalk D | 27 | 17 | 0 | 0 | 69 | 112 | 0 | 0 | 37 | 59 | 0 | 0 | 7 | 1978 | 0 | 0 | 2099 | 31 | 0 | 0 |
| | Corner A & B | 0 | 0 | 11 | 7 | 0 | 0 | 21 | 14 | 0 | 0 | 3 | 16 | 0 | 0 | 0 | 0 | 0 | 0 | 2 | 58 |
| | Corner C & D | 1 | 3 | 0 | 0 | 2 | 8 | 0 | 0 | 3 | 9 | 0 | 0 | 1 | 61 | 0 | 0 | 88 | 4 | 0 | 0 |
| | Crosswalk (A-B-C) | 3 | 13 | 29 | 11 | 40 | 49 | 41 | 97 | 22 | 16 | 10 | 53 | 1 | 2069 | 5 | 88 | 2213 | 11 | 106 | 32 |
| | Crosswalk (C-D-A) | 2 | 5 | 7 | 1 | 16 | 13 | 5 | 7 | 9 | 2 | 14 | 14 | 2 | 604 | 3 | 4 | 624 | 1 | 3 | 3 |
| *Tenth Ave & W. 33rd St* | Sidewalk A | 16 | 88 | 38 | 39 | 178 | 180 | 113 | 125 | 130 | 60 | 21 | 52 | 14 | 829 | 13 | 151 | 1039 | 61 | 185 | 36 |
| | Sidewalk B | 34 | 24 | 27 | 84 | 75 | 83 | 106 | 137 | 37 | 40 | 115 | 58 | 10 | 169 | 5 | 658 | 165 | 32 | 780 | 54 |
| | Sidewalk C | 38 | 92 | 28 | 12 | 150 | 212 | 24 | 56 | 160 | 98 | 28 | 41 | 28 | 2377 | 11 | 681 | 2453 | 106 | 735 | 87 |
| | Sidewalk D | 32 | 32 | 32 | 72 | 75 | 111 | 92 | 129 | 53 | 53 | 129 | 58 | 747 | 37 | 17 | 2564 | 54 | 810 | 2546 | 60 |
| | Corner A & B | 0 | 2 | 4 | 3 | 11 | 11 | 14 | 4 | 5 | 2 | 8 | 7 | 0 | 89 | 96 | 0 | 92 | 2 | 6 | 96 |
| | Corner C & D | 2 | 7 | 7 | 1 | 4 | 8 | 10 | 3 | 5 | 8 | 4 | 8 | 1 | 11 | 730 | 0 | 16 | 4 | 0 | 773 |
| | Crosswalk (A-B-C) | 23 | 90 | 37 | 18 | 137 | 165 | 85 | 88 | 113 | 55 | 28 | 44 | 9 | 708 | 21 | 128 | 900 | 52 | 45 | 30 |
| | Crosswalk (C-D-A) | 33 | 88 | 43 | 12 | 132 | 165 | 120 | 178 | 143 | 86 | 32 | 62 | 25 | 1849 | 9 | 34 | 1795 | 83 | 64 | 46 |
| *Tenth Ave & W. 34th St* | Sidewalk A | 39 | 224 | 18 | 39 | 231 | 224 | 69 | 76 | 271 | 68 | 48 | 41 | 21 | 184 | 7 | 108 | 255 | 66 | 213 | 23 |
| | Sidewalk B | 15 | 26 | 23 | 181 | 58 | 59 | 93 | 113 | 35 | 21 | 170 | 68 | 13 | 79 | 24 | 254 | 140 | 25 | 177 | 62 |
| | Sidewalk C | 45 | 215 | 47 | 23 | 164 | 175 | 111 | 110 | 228 | 111 | 45 | 58 | 55 | 486 | 13 | 170 | 444 | 70 | 170 | 30 |
| | Sidewalk D | 31 | 18 | 31 | 189 | 121 | 131 | 158 | 142 | 24 | 39 | 292 | 87 | 9 | 162 | 88 | 411 | 174 | 29 | 410 | 61 |
| | Corner A & B | 7 | 27 | 4 | 8 | 13 | 13 | 4 | 1 | 35 | 4 | 16 | 6 | 2 | 57 | 4 | 5 | 96 | 1 | 3 | 3 |
| | Corner C & D | 13 | 11 | 6 | 3 | 34 | 37 | 4 | 8 | 15 | 38 | 8 | 12 | 4 | 119 | 1 | 1 | 87 | 7 | 1 | 3 |
| | Crosswalk (A-B-C) | 26 | 192 | 24 | 23 | 153 | 144 | 78 | 94 | 236 | 69 | 36 | 78 | 17 | 184 | 13 | 132 | 208 | 62 | 121 | 29 |
| | Crosswalk (C-D-A) | 32 | 181 | 26 | 18 | 153 | 153 | 132 | 133 | 282 | 81 | 34 | 42 | 86 | 462 | 6 | 113 | 414 | 62 | 173 | 31 |
| *Tenth Ave & W. 35th St* | Sidewalk A | 5 | 106 | 13 | 32 | 48 | 52 | 165 | 175 | 75 | 22 | 39 | 40 | | | | | | | | |
| | Sidewalk B | 4 | 14 | 7 | 135 | 71 | 71 | 39 | 59 | 43 | 39 | 106 | 30 | | | | | | | | |
| | Sidewalk C | 12 | 141 | 4 | 8 | 74 | 117 | 48 | 30 | 75 | 56 | 40 | 22 | | | | | | | | |
| | Sidewalk D | 21 | 31 | 22 | 172 | 41 | 32 | 262 | 310 | 45 | 27 | 113 | 91 | | | | | | | | |
| | Corner A & B | 0 | 0 | 1 | 0 | 16 | 9 | 4 | 1 | 0 | 1 | 10 | 4 | | | | | | | | |
| | Corner C & D | 0 | 1 | 6 | 0 | 0 | 0 | 10 | 11 | 1 | 0 | 3 | 3 | | | | | | | | |
| | Crosswalk (A-B-C) | 6 | 146 | 6 | 15 | 43 | 61 | 73 | 66 | 99 | 29 | 39 | 23 | | | | | | | | |
| | Crosswalk (C-D-A) | 16 | 153 | 15 | 46 | 118 | 172 | 182 | 194 | 106 | 76 | 58 | 52 | | | | | | | | |

# Appendix S.5.2

**PEDESTRIAN VOLUMES (SIDEWALKS, CORNERS, AND CROSSWALKS)**
**2010 FUTURE WITH THE PROPOSED ACTION**

| Intersection | Elements | Weekday AM Peak 15-Min. | | | | Weekday MD Peak 15-Min. | | | | Weekday PM Peak 15-Min. | | | | Special Events Evening Peak 15-Min. | | | | Special Events Sunday Peak 15-Min. | | | |
|---|---|---|---|---|---|---|---|---|---|---|---|---|---|---|---|---|---|---|---|---|---|
| ***Tenth Ave & W. 36th St*** | Sidewalk A | 4 | 15 | 11 | 24 | 26 | 37 | 135 | 141 | 3 | 13 | 39 | 27 | | | | | | | | |
| | Sidewalk B | 11 | 8 | 4 | 16 | 49 | 58 | 32 | 36 | 24 | 19 | 14 | 15 | | | | | | | | |
| | Sidewalk C | 1 | 22 | 14 | 13 | 27 | 40 | 52 | 53 | 26 | 17 | 32 | 22 | | | | | | | | |
| | Sidewalk D | 12 | 28 | 1 | 15 | 159 | 155 | 8 | 25 | 45 | 32 | 21 | 12 | | | | | | | | |
| | Corner A & B | 0 | 0 | 0 | 0 | 2 | 8 | 7 | 0 | 0 | 0 | 1 | 1 | | | | | | | | |
| | Corner C & D | 0 | 0 | 0 | 0 | 1 | 2 | 3 | 0 | 1 | 0 | 0 | 3 | | | | | | | | |
| | Crosswalk (A-B-C) | 3 | 18 | 81 | 31 | 39 | 44 | 53 | 44 | 27 | 16 | 24 | 24 | | | | | | | | |
| | Crosswalk (C-D-A) | 14 | 61 | 45 | 54 | 23 | 37 | 148 | 152 | 87 | 10 | 45 | 55 | | | | | | | | |
| ***Tenth Ave & W. 37th St*** | Sidewalk A | 11 | 8 | 9 | 12 | 30 | 40 | 95 | 102 | 7 | 23 | 23 | 14 | | | | | | | | |
| | Sidewalk B | 23 | 24 | 9 | 22 | 70 | 60 | 32 | 44 | 39 | 16 | 19 | 16 | | | | | | | | |
| | Sidewalk C | 15 | 26 | 10 | 16 | 26 | 44 | 38 | 45 | 13 | 18 | 22 | 17 | | | | | | | | |
| | Sidewalk D | 6 | 24 | 9 | 11 | 121 | 124 | 7 | 13 | 32 | 20 | 5 | 18 | | | | | | | | |
| | Corner A & B | 1 | 2 | 4 | 4 | 2 | 2 | 9 | 6 | 6 | 2 | 8 | 11 | | | | | | | | |
| | Corner C & D | 9 | 8 | 3 | 1 | 8 | 5 | 2 | 2 | 0 | 1 | 3 | 4 | | | | | | | | |
| | Crosswalk (A-B-C) | 11 | 28 | 12 | 40 | 35 | 45 | 52 | 54 | 28 | 21 | 21 | 17 | | | | | | | | |
| | Crosswalk (C-D-A) | 6 | 11 | 18 | 26 | 23 | 30 | 114 | 120 | 12 | 23 | 26 | 19 | | | | | | | | |
| ***Tenth Ave & W. 38th St*** | Sidewalk A | 8 | 8 | 10 | 17 | 12 | 18 | 60 | 69 | 26 | 16 | 16 | 17 | | | | | | | | |
| | Sidewalk B | 11 | 18 | 6 | 15 | 66 | 61 | 30 | 42 | 19 | 21 | 12 | 18 | | | | | | | | |
| | Sidewalk C | 3 | 7 | 8 | 8 | 21 | 33 | 45 | 49 | 12 | 18 | 22 | 14 | | | | | | | | |
| | Sidewalk D | 12 | 14 | 3 | 5 | 85 | 87 | 10 | 18 | 25 | 12 | 12 | 13 | | | | | | | | |
| | Corner A & B | 0 | 3 | 1 | 4 | 1 | 5 | 8 | 9 | 2 | 1 | 2 | 2 | | | | | | | | |
| | Corner C & D | 0 | 0 | 1 | 0 | 2 | 3 | 2 | 3 | 0 | 1 | 2 | 2 | | | | | | | | |
| | Crosswalk (A-B-C) | 6 | 7 | 5 | 14 | 24 | 37 | 52 | 53 | 12 | 14 | 24 | 18 | | | | | | | | |
| | Crosswalk (C-D-A) | 2 | 7 | 5 | 18 | 19 | 30 | 76 | 75 | 16 | 14 | 21 | 15 | | | | | | | | |
| ***Tenth Ave & W. 39th St*** | Sidewalk A | 9 | 9 | 6 | 8 | 23 | 31 | 35 | 40 | 14 | 25 | 11 | 14 | | | | | | | | |
| | Sidewalk B | 12 | 17 | 10 | 11 | 62 | 69 | 34 | 43 | 23 | 23 | 16 | 28 | | | | | | | | |
| | Sidewalk C | 10 | 20 | 16 | 18 | 37 | 40 | 58 | 61 | 28 | 26 | 34 | 18 | | | | | | | | |
| | Sidewalk D | 7 | 13 | 8 | 10 | 62 | 60 | 21 | 27 | 17 | 15 | 18 | 26 | | | | | | | | |
| | Corner A & B | 0 | 0 | 0 | 1 | 0 | 0 | 3 | 2 | 0 | 0 | 1 | 1 | | | | | | | | |
| | Corner C & D | 7 | 0 | 0 | 0 | 1 | 1 | 2 | 0 | 0 | 2 | 1 | 0 | | | | | | | | |
| | Crosswalk (A-B-C) | 9 | 10 | 17 | 15 | 32 | 40 | 61 | 67 | 15 | 26 | 31 | 21 | | | | | | | | |
| | Crosswalk (C-D-A) | 8 | 16 | 7 | 10 | 29 | 37 | 46 | 50 | 28 | 27 | 20 | 19 | | | | | | | | |
| ***Tenth Ave & W. 40th St*** | Sidewalk A | 9 | 14 | 3 | 8 | 20 | 47 | 27 | 26 | 6 | 43 | 25 | 15 | | | | | | | | |
| | Sidewalk B | 24 | 37 | 10 | 18 | 57 | 62 | 30 | 56 | 96 | 41 | 19 | 69 | | | | | | | | |
| | Sidewalk C | 6 | 11 | 15 | 31 | 25 | 43 | 60 | 71 | 7 | 48 | 29 | 29 | | | | | | | | |
| | Sidewalk D | 5 | 7 | 2 | 4 | 29 | 31 | 10 | 8 | 26 | 16 | 2 | 2 | | | | | | | | |
| | Corner A & B | 0 | 1 | 4 | 8 | 5 | 3 | 12 | 10 | 1 | 2 | 40 | 12 | | | | | | | | |
| | Corner C & D | 2 | 0 | 1 | 0 | 15 | 17 | 2 | 4 | 1 | 4 | 0 | 0 | | | | | | | | |
| | Crosswalk (A-B-C) | 8 | 13 | 18 | 29 | 27 | 53 | 49 | 45 | 8 | 37 | 62 | 28 | | | | | | | | |
| | Crosswalk (C-D-A) | 3 | 5 | 6 | 8 | 8 | 17 | 37 | 31 | 4 | 9 | 31 | 14 | | | | | | | | |
| ***Tenth Ave & W. 41st St*** | Sidewalk A | 38 | 27 | 19 | 25 | 46 | 51 | 27 | 33 | 39 | 41 | 20 | 18 | | | | | | | | |
| | Sidewalk B | 37 | 75 | 54 | 16 | 127 | 127 | 69 | 68 | 88 | 124 | 97 | 49 | | | | | | | | |
| | Sidewalk C | 10 | 9 | 19 | 31 | 33 | 58 | 73 | 72 | 11 | 39 | 107 | 41 | | | | | | | | |
| | Sidewalk D | 7 | 16 | 2 | 6 | 23 | 26 | 2 | 25 | 28 | 19 | 3 | 23 | | | | | | | | |
| | Corner A & B | 3 | 4 | 5 | 17 | 2 | 6 | 30 | 29 | 3 | 4 | 16 | 67 | | | | | | | | |
| | Corner C & D | 0 | 0 | 0 | 0 | 3 | 1 | 0 | 0 | 7 | 1 | 1 | 2 | | | | | | | | |
| | Crosswalk (A-B-C) | 50 | 25 | 22 | 43 | 66 | 62 | 74 | 70 | 53 | 45 | 114 | 36 | | | | | | | | |
| | Crosswalk (C-D-A) | 3 | 6 | 7 | 18 | 23 | 38 | 38 | 40 | 8 | 23 | 23 | 19 | | | | | | | | |
| ***Tenth Ave & W. 42nd St*** | Sidewalk A | 197 | 59 | 15 | 12 | 195 | 126 | 60 | 65 | 178 | 180 | 29 | 45 | | | | | | | | |
| | Sidewalk B | 30 | 47 | 228 | 149 | 115 | 109 | 190 | 179 | 46 | 84 | 186 | 255 | | | | | | | | |
| | Sidewalk C | 180 | 287 | 31 | 38 | 242 | 324 | 40 | 38 | 325 | 276 | 51 | 40 | | | | | | | | |
| | Sidewalk D | 37 | 19 | 73 | 70 | 40 | 38 | 119 | 207 | 18 | 32 | 92 | 184 | | | | | | | | |
| | Corner A & B | 17 | 11 | 13 | 10 | 16 | 13 | 33 | 21 | 12 | 9 | 26 | 30 | | | | | | | | |
| | Corner C & D | 9 | 3 | 4 | 3 | 0 | 5 | 0 | 0 | 22 | 66 | 1 | 1 | | | | | | | | |
| | Crosswalk (A-B-C) | 203 | 64 | 32 | 57 | 197 | 153 | 103 | 120 | 148 | 209 | 41 | 88 | | | | | | | | |
| | Crosswalk (C-D-A) | 103 | 68 | 22 | 25 | 147 | 230 | 50 | 64 | 105 | 204 | 32 | 37 | | | | | | | | |
| ***Dyer Ave & W. 42nd St*** | Sidewalk A | 157 | 126 | 0 | 0 | 85 | 103 | 0 | 0 | 169 | 178 | 0 | 0 | | | | | | | | |
| | Sidewalk B | 0 | 0 | 178 | 124 | 0 | 0 | 99 | 109 | 0 | 0 | 174 | 218 | | | | | | | | |
| | Sidewalk C | 112 | 312 | 3 | 5 | 145 | 246 | 1 | 2 | 283 | 231 | 11 | 5 | | | | | | | | |
| | Sidewalk D | 1 | 0 | 122 | 291 | 1 | 4 | 145 | 237 | 3 | 1 | 289 | 216 | | | | | | | | |
| | Corner A & B | 0 | 0 | 0 | 0 | 0 | 0 | 0 | 0 | 0 | 0 | 0 | 0 | | | | | | | | |
| | Corner C & D | 3 | 0 | 0 | 0 | 0 | 1 | 0 | 0 | 0 | 4 | 0 | 0 | | | | | | | | |
| | Crosswalk (A-B-C) | 98 | 66 | 4 | 5 | 72 | 55 | 1 | 5 | 147 | 122 | 4 | 7 | | | | | | | | |
| | Crosswalk (C-D-A) | 117 | 298 | 5 | 2 | 146 | 237 | 3 | 2 | 289 | 246 | 9 | 10 | | | | | | | | |
| ***Ninth Ave & W. 30th St*** | Sidewalk A | 19 | 19 | 209 | 25 | 81 | 117 | 140 | 163 | 33 | 41 | 45 | 68 | 8 | 638 | 28 | 237 | 1136 | 44 | 382 | 56 |
| | Sidewalk B | 140 | 54 | 26 | 30 | 287 | 318 | 13 | 40 | 90 | 121 | 20 | 45 | 39 | 222 | 6 | 243 | 396 | 128 | 515 | 35 |
| | Sidewalk C | 45 | 29 | 49 | 47 | 31 | 30 | 171 | 177 | 24 | 55 | 63 | 75 | 9 | 12 | 93 | 31 | 268 | 22 | 102 | 105 |
| | Sidewalk D | 67 | 47 | 255 | 29 | 158 | 160 | 66 | 65 | 62 | 57 | 26 | 94 | 85 | 11 | 25 | 144 | 73 | 133 | 265 | 30 |
| | Corner A & B | 7 | 0 | 3 | 13 | 3 | 1 | 10 | 13 | 3 | 4 | 8 | 11 | 5 | 25 | 1 | 5 | 32 | 13 | 8 | 16 |
| | Corner C & D | 16 | 7 | 7 | 16 | 2 | 8 | 10 | 2 | 4 | 5 | 18 | 4 | 2 | 3 | 69 | 3 | 1 | 19 | 16 | 74 |
| | Crosswalk (A-B-C) | 63 | 30 | 79 | 34 | 79 | 118 | 174 | 216 | 34 | 45 | 68 | 99 | 8 | 420 | 21 | 33 | 899 | 45 | 97 | 198 |
| | Crosswalk (C-D-A) | 86 | 16 | 221 | 36 | 40 | 45 | 150 | 157 | 19 | 59 | 42 | 69 | 10 | 75 | 21 | 9 | 193 | 24 | 100 | 74 |
| ***Ninth Ave & W. 31st St*** | Sidewalk A | 20 | 48 | 66 | 68 | 80 | 111 | 55 | 54 | 31 | 28 | 23 | 33 | 5 | 1484 | 8 | 61 | 1623 | 48 | 64 | 17 |
| | Sidewalk B | 54 | 39 | 94 | 168 | 19 | 25 | 428 | 566 | 45 | 39 | 121 | 121 | 15 | 544 | 12 | 1750 | 669 | 15 | 2067 | 270 |
| | Sidewalk C | 88 | 137 | 145 | 51 | 51 | 56 | 233 | 286 | 92 | 42 | 128 | 113 | 16 | 462 | 33 | 215 | 563 | 11 | 355 | 104 |
| | Sidewalk D | 34 | 25 | 34 | 55 | 173 | 191 | 94 | 71 | 46 | 54 | 70 | 8 | 11 | 241 | 5 | 877 | 297 | 68 | 953 | 10 |
| | Corner A & B | 4 | 10 | 5 | 29 | 1 | 0 | 9 | 5 | 39 | 116 | 39 | 116 | 2 | 0 | 0 | 1 | 5 | 1 | 13 | 63 |
| | Corner C & D | 46 | 47 | 4 | 9 | 9 | 2 | 49 | 52 | 33 | 114 | 17 | 68 | 7 | 66 | 0 | 0 | 109 | 3 | 3 | 3 |
| | Crosswalk (A-B-C) | 21 | 38 | 73 | 92 | 151 | 204 | 296 | 366 | 52 | 50 | 90 | 105 | 3 | 1811 | 20 | 483 | 2015 | 89 | 651 | 124 |
| | Crosswalk (C-D-A) | 61 | 86 | 59 | 26 | 103 | 126 | 109 | 122 | 63 | 27 | 31 | 44 | 9 | 726 | 7 | 393 | 814 | 45 | 435 | 42 |
| ***Ninth Ave & W. 33rd St*** | Sidewalk A | 24 | 159 | 38 | 175 | 110 | 173 | 127 | 170 | 114 | 56 | 185 | 25 | 14 | 640 | 22 | 200 | 736 | 65 | 162 | 52 |
| | Sidewalk B | 67 | 103 | 27 | 249 | 306 | 281 | 95 | 164 | 120 | 74 | 39 | 36 | 45 | 218 | 14 | 500 | 324 | 167 | 512 | 55 |
| | Sidewalk C | 155 | 451 | 37 | 26 | 542 | 642 | 86 | 112 | 328 | 313 | 7 | 42 | 61 | 2679 | 25 | 544 | 3080 | 262 | 616 | 32 |
| | Sidewalk D | 29 | 72 | 69 | 527 | 111 | 156 | 193 | 246 | 54 | 11 | 191 | 95 | 52 | 47 | 65 | 2357 | 54 | 21 | 2393 | 108 |
| | Corner A & B | 2 | 29 | 17 | 53 | 2 | 6 | 31 | 55 | 95 | 82 | 135 | 81 | 5 | 57 | 61 | 7 | 20 | 1 | 40 | 87 |
| | Corner C & D | 12 | 8 | 1 | 4 | 13 | 35 | 19 | 29 | 69 | 164 | 59 | 53 | 1 | 511 | 38 | 1 | 550 | 4 | 0 | 2 |
| | Crosswalk (A-B-C) | 40 | 215 | 111 | 156 | 136 | 166 | 366 | 409 | 111 | 86 | 201 | 236 | 13 | 573 | 30 | 146 | 654 | 59 | 180 | 171 |
| | Crosswalk (C-D-A) | 62 | 389 | 36 | 224 | 244 | 323 | 198 | 184 | 305 | 169 | 163 | 40 | 33 | 2260 | 16 | 118 | 2415 | 140 | 94 | 54 |

# Appendix S.5.2

**PEDESTRIAN VOLUMES (SIDEWALKS, CORNERS, AND CROSSWALKS)**
**2010 FUTURE WITH THE PROPOSED ACTION**

| Intersection | Elements | Weekday AM Peak 15-Min. | | | | Weekday MD Peak 15-Min. | | | | Weekday PM Peak 15-Min. | | | | Special Events Evening Peak 15-Min. | | | | Special Events Sunday Peak 15-Min. | | | |
|---|---|---|---|---|---|---|---|---|---|---|---|---|---|---|---|---|---|---|---|---|---|
| ***Ninth Ave & W. 34th St*** | Sidewalk A | 71 | 173 | 73 | 84 | 167 | 193 | 153 | 177 | 209 | 121 | 173 | 109 | 31 | 252 | 26 | 146 | 191 | 67 | 78 | 77 |
| | Sidewalk B | 86 | 87 | 79 | 255 | 242 | 183 | 171 | 157 | 167 | 130 | 367 | 135 | 34 | 80 | 63 | 445 | 120 | 117 | 263 | 96 |
| | Sidewalk C | 92 | 228 | 36 | 126 | 190 | 187 | 374 | 331 | 392 | 116 | 174 | 160 | 91 | 536 | 49 | 215 | 684 | 129 | 330 | 187 |
| | Sidewalk D | 39 | 124 | 58 | 252 | 157 | 267 | 222 | 220 | 232 | 65 | 329 | 118 | 26 | 202 | 60 | 485 | 170 | 53 | 485 | 90 |
| | Corner A & B | 145 | 195 | 139 | 192 | 40 | 47 | 20 | 12 | 89 | 170 | 87 | 164 | 1 | 56 | 24 | 14 | 39 | 5 | 13 | 11 |
| | Corner C & D | 127 | 131 | 120 | 113 | 64 | 79 | 72 | 98 | 66 | 140 | 66 | 114 | 20 | 128 | 47 | 6 | 163 | 52 | 13 | 11 |
| | Crosswalk (A-B-C) | 107 | 228 | 69 | 154 | 188 | 177 | 293 | 260 | 477 | 167 | 191 | 198 | 57 | 302 | 44 | 209 | 247 | 81 | 215 | 146 |
| | Crosswalk (C-D-A) | 77 | 306 | 40 | 106 | 175 | 209 | 128 | 148 | 349 | 142 | 231 | 73 | 46 | 512 | 29 | 157 | 539 | 101 | 97 | 50 |
| ***Ninth Ave & W. 37th St*** | Sidewalk A | 19 | 18 | 33 | 252 | 54 | 66 | 65 | 277 | 68 | 28 | 89 | 225 | | | | | | | | |
| | Sidewalk B | 60 | 111 | 16 | 81 | 144 | 142 | 35 | 117 | 151 | 97 | 52 | 91 | | | | | | | | |
| | Sidewalk C | 25 | 30 | 78 | 119 | 31 | 44 | 183 | 134 | 44 | 33 | 208 | 73 | | | | | | | | |
| | Sidewalk D | 23 | 238 | 14 | 20 | 76 | 263 | 49 | 39 | 43 | 234 | 58 | 21 | | | | | | | | |
| | Corner A & B | 7 | 71 | 8 | 6 | 13 | 75 | 13 | 12 | 16 | 69 | 6 | 6 | | | | | | | | |
| | Corner C & D | 14 | 14 | 4 | 1 | 16 | 14 | 2 | 3 | 7 | 10 | 0 | 6 | | | | | | | | |
| | Crosswalk (A-B-C) | 13 | 14 | 61 | 103 | 43 | 63 | 157 | 130 | 83 | 33 | 206 | 80 | | | | | | | | |
| | Crosswalk (C-D-A) | 14 | 14 | 32 | 243 | 44 | 32 | 63 | 268 | 55 | 24 | 72 | 221 | | | | | | | | |
| ***Ninth Ave & W. 38th St*** | Sidewalk A | 5 | 7 | 22 | 41 | 22 | 34 | 60 | 92 | 27 | 21 | 41 | 69 | | | | | | | | |
| | Sidewalk B | 44 | 76 | 11 | 29 | 62 | 77 | 30 | 41 | 50 | 73 | 43 | 69 | | | | | | | | |
| | Sidewalk C | 20 | 26 | 80 | 74 | 18 | 37 | 56 | 65 | 18 | 25 | 84 | 89 | | | | | | | | |
| | Sidewalk D | 41 | 20 | 13 | 10 | 85 | 67 | 28 | 50 | 49 | 67 | 15 | 19 | | | | | | | | |
| | Corner A & B | 2 | 6 | 1 | 8 | 4 | 3 | 5 | 10 | 5 | 2 | 9 | 9 | | | | | | | | |
| | Corner C & D | 4 | 6 | 0 | 1 | 12 | 11 | 0 | 5 | 4 | 5 | 1 | 3 | | | | | | | | |
| | Crosswalk (A-B-C) | 20 | 6 | 83 | 80 | 14 | 18 | 72 | 73 | 27 | 37 | 114 | 71 | | | | | | | | |
| | Crosswalk (C-D-A) | 17 | 15 | 46 | 25 | 17 | 29 | 59 | 71 | 26 | 40 | 47 | 32 | | | | | | | | |
| ***Ninth Ave & W. 39th St*** | Sidewalk A | 18 | 28 | 27 | 57 | 32 | 46 | 55 | 67 | 28 | 35 | 92 | 50 | | | | | | | | |
| | Sidewalk B | 52 | 147 | 24 | 23 | 110 | 103 | 36 | 63 | 193 | 96 | 39 | 47 | | | | | | | | |
| | Sidewalk C | 39 | 27 | 44 | 114 | 59 | 65 | 123 | 106 | 40 | 56 | 197 | 93 | | | | | | | | |
| | Sidewalk D | 41 | 42 | 15 | 15 | 82 | 56 | 36 | 40 | 85 | 53 | 24 | 33 | | | | | | | | |
| | Corner A & B | 2 | 10 | 8 | 6 | 0 | 4 | 6 | 8 | 6 | 4 | 7 | 5 | | | | | | | | |
| | Corner C & D | 9 | 4 | 0 | 3 | 7 | 19 | 0 | 1 | 7 | 5 | 2 | 3 | | | | | | | | |
| | Crosswalk (A-B-C) | 20 | 24 | 44 | 120 | 34 | 46 | 122 | 93 | 45 | 54 | 201 | 103 | | | | | | | | |
| | Crosswalk (C-D-A) | 30 | 21 | 23 | 51 | 61 | 44 | 38 | 38 | 47 | 49 | 88 | 36 | | | | | | | | |
| ***Ninth Ave & W. 42nd St*** | Sidewalk A | 251 | 127 | 101 | 86 | 213 | 190 | 203 | 154 | 296 | 242 | 200 | 166 | | | | | | | | |
| | Sidewalk B | 95 | 110 | 260 | 188 | 157 | 150 | 238 | 240 | 175 | 167 | 313 | 328 | | | | | | | | |
| | Sidewalk C | 237 | 321 | 140 | 136 | 260 | 376 | 163 | 127 | 351 | 342 | 192 | 160 | | | | | | | | |
| | Sidewalk D | 41 | 37 | 219 | 321 | 106 | 126 | 250 | 323 | 93 | 93 | 351 | 310 | | | | | | | | |
| | Corner A & B | 14 | 17 | 11 | 20 | 25 | 32 | 23 | 30 | 17 | 38 | 21 | 38 | | | | | | | | |
| | Corner C & D | 33 | 11 | 6 | 7 | 31 | 33 | 11 | 17 | 22 | 24 | 13 | 7 | | | | | | | | |
| | Crosswalk (A-B-C) | 271 | 142 | 108 | 156 | 233 | 230 | 162 | 178 | 327 | 316 | 176 | 252 | | | | | | | | |
| | Crosswalk (C-D-A) | 207 | 286 | 172 | 172 | 251 | 351 | 181 | 174 | 330 | 316 | 262 | 269 | | | | | | | | |
| ***Eighth Ave & W. 30th St*** | Sidewalk A | 52 | 25 | 93 | 91 | 34 | 50 | 196 | 258 | 32 | 57 | 133 | 137 | 17 | 260 | 66 | 163 | 545 | 49 | 254 | 139 |
| | Sidewalk B | 108 | 247 | 34 | 16 | 171 | 224 | 65 | 95 | 237 | 186 | 61 | 95 | 156 | 200 | 26 | 84 | 362 | 164 | 73 | 39 |
| | Sidewalk C | 46 | 29 | 53 | 115 | 55 | 68 | 117 | 81 | 26 | 40 | 183 | 102 | 11 | 27 | 78 | 31 | 23 | 18 | 103 | 237 |
| | Sidewalk D | 75 | 82 | 30 | 14 | 134 | 170 | 27 | 33 | 112 | 107 | 24 | 48 | 77 | 55 | 21 | 26 | 94 | 217 | 227 | 42 |
| | Corner A & B | 28 | 12 | 40 | 13 | 17 | 20 | 36 | 38 | 9 | 28 | 42 | 56 | 9 | 125 | 18 | 39 | 138 | 25 | 21 | 10 |
| | Corner C & D | 12 | 8 | 0 | 11 | 16 | 14 | 10 | 10 | 5 | 9 | 0 | 3 | 5 | 1 | 4 | 2 | 1 | 7 | 16 | 78 |
| | Crosswalk (A-B-C) | 19 | 57 | 57 | 127 | 40 | 56 | 121 | 125 | 35 | 51 | 187 | 126 | 10 | 139 | 64 | 33 | 345 | 36 | 109 | 175 |
| | Crosswalk (C-D-A) | 34 | 20 | 66 | 72 | 33 | 55 | 112 | 134 | 24 | 43 | 113 | 115 | 19 | 12 | 60 | 45 | 98 | 23 | 100 | 153 |
| ***Eighth Ave & W. 31st St*** | Sidewalk A | 149 | 100 | 49 | 140 | 293 | 201 | 43 | 168 | 168 | 78 | 90 | 191 | 65 | 1327 | 64 | 142 | 1547 | 122 | 119 | 111 |
| | Sidewalk B | 37 | 98 | 119 | 313 | 87 | 66 | 265 | 178 | 117 | 96 | 220 | 104 | 68 | 107 | 101 | 642 | 273 | 223 | 813 | 138 |
| | Sidewalk C | 14 | 27 | 54 | 80 | 48 | 49 | 164 | 88 | 24 | 35 | 132 | 35 | 0 | 136 | 142 | 163 | 375 | 21 | 344 | 141 |
| | Sidewalk D | 52 | 53 | 30 | 100 | 145 | 118 | 94 | 70 | 70 | 84 | 65 | 75 | 118 | 227 | 69 | 505 | 214 | 108 | 565 | 15 |
| | Corner A & B | 19 | 37 | 21 | 16 | 26 | 42 | 30 | 26 | 26 | 21 | 30 | 22 | 20 | 9 | 36 | 78 | 8 | 9 | 35 | 31 |
| | Corner C & D | 11 | 7 | 21 | 10 | 6 | 6 | 26 | 31 | 6 | 6 | 16 | 18 | 1 | 26 | 40 | 53 | 143 | 9 | 4 | 4 |
| | Crosswalk (A-B-C) | 126 | 151 | 81 | 207 | 282 | 201 | 110 | 165 | 228 | 106 | 129 | 133 | 81 | 1115 | 119 | 336 | 1260 | 128 | 454 | 127 |
| | Crosswalk (C-D-A) | 34 | 89 | 81 | 93 | 80 | 124 | 172 | 188 | 66 | 89 | 153 | 108 | 31 | 349 | 62 | 279 | 486 | 55 | 339 | 102 |
| ***Eighth Ave & W. 33rd St*** | Sidewalk A | 142 | 318 | 362 | 403 | 194 | 180 | 639 | 400 | 114 | 146 | 710 | 273 | 42 | 433 | 236 | 247 | 499 | 62 | 451 | 248 |
| | Sidewalk B | 163 | 157 | 221 | 258 | 202 | 130 | 193 | 154 | 357 | 118 | 216 | 197 | 86 | 355 | 110 | 266 | 485 | 316 | 233 | 117 |
| | Sidewalk C | 208 | 280 | 239 | 134 | 463 | 425 | 231 | 189 | 327 | 391 | 187 | 391 | 108 | 475 | 160 | 284 | 467 | 233 | 240 | 170 |
| | Sidewalk D | 164 | 166 | 265 | 422 | 277 | 195 | 746 | 596 | 305 | 96 | 682 | 257 | 144 | 122 | 187 | 2066 | 205 | 84 | 2453 | 245 |
| | Corner A & B | 17 | 16 | 29 | 16 | 37 | 22 | 69 | 54 | 56 | 40 | 52 | 56 | 7 | 7 | 32 | 28 | 32 | 12 | 45 | 39 |
| | Corner C & D | 30 | 23 | 21 | 29 | 68 | 80 | 65 | 72 | 39 | 80 | 55 | 63 | 23 | 71 | 40 | 26 | 165 | 62 | 14 | 20 |
| | Crosswalk (A-B-C) | 301 | 262 | 294 | 138 | 236 | 267 | 356 | 312 | 549 | 248 | 646 | 204 | 114 | 389 | 127 | 293 | 390 | 139 | 293 | 316 |
| | Crosswalk (C-D-A) | 428 | 295 | 711 | 358 | 535 | 416 | 578 | 373 | 514 | 312 | 734 | 224 | 220 | 1435 | 375 | 218 | 1683 | 227 | 362 | 179 |
| ***Eighth Ave & W. 34th St*** | Sidewalk A | 221 | 176 | 77 | 166 | 175 | 137 | 246 | 242 | 350 | 179 | 292 | 171 | 90 | 244 | 38 | 72 | 317 | 116 | 198 | 175 |
| | Sidewalk B | 145 | 94 | 115 | 216 | 121 | 100 | 221 | 244 | 177 | 152 | 195 | 267 | 102 | 144 | 148 | 362 | 291 | 270 | 414 | 278 |
| | Sidewalk C | 83 | 178 | 194 | 60 | 146 | 179 | 128 | 80 | 232 | 162 | 174 | 134 | 139 | 625 | 37 | 172 | 848 | 215 | 351 | 268 |
| | Sidewalk D | 215 | 158 | 109 | 176 | 386 | 261 | 136 | 92 | 395 | 205 | 259 | 103 | 202 | 165 | 40 | 509 | 399 | 170 | 743 | 237 |
| | Corner A & B | 26 | 31 | 50 | 49 | 37 | 42 | 58 | 58 | 53 | 53 | 112 | 111 | 84 | 179 | 764 | 906 | 10 | 21 | 113 | 34 |
| | Corner C & D | 20 | 16 | 23 | 35 | 49 | 26 | 19 | 26 | 54 | 31 | 43 | 43 | 119 | 349 | 143 | 54 | 139 | 27 | 43 | 20 |
| | Crosswalk (A-B-C) | 179 | 227 | 182 | 163 | 366 | 318 | 269 | 226 | 483 | 277 | 242 | 404 | 103 | 201 | 167 | 287 | 353 | 141 | 271 | 168 |
| | Crosswalk (C-D-A) | 140 | 244 | 193 | 228 | 218 | 266 | 403 | 366 | 314 | 195 | 443 | 245 | 727 | 1338 | 98 | 86 | 862 | 176 | 235 | 202 |
| ***Eighth Ave & W. 37th St*** | Sidewalk A | 23 | 42 | 209 | 234 | 182 | 120 | 80 | 125 | 43 | 40 | 266 | 195 | | | | | | | | |
| | Sidewalk B | 148 | 275 | 103 | 37 | 216 | 247 | 65 | 72 | 388 | 351 | 28 | 112 | | | | | | | | |
| | Sidewalk C | 55 | 28 | 172 | 176 | 66 | 147 | 83 | 85 | 75 | 62 | 298 | 228 | | | | | | | | |
| | Sidewalk D | 172 | 236 | 48 | 30 | 224 | 120 | 151 | 74 | 417 | 245 | 70 | 100 | | | | | | | | |
| | Corner A & B | 14 | 18 | 66 | 33 | 24 | 23 | 23 | 22 | 24 | 16 | 18 | 14 | | | | | | | | |
| | Corner C & D | 21 | 25 | 24 | 26 | 25 | 18 | 29 | 29 | 73 | 21 | 91 | 30 | | | | | | | | |
| | Crosswalk (A-B-C) | 52 | 43 | 168 | 176 | 173 | 135 | 181 | 197 | 43 | 91 | 262 | 310 | | | | | | | | |
| | Crosswalk (C-D-A) | 49 | 57 | 218 | 238 | 150 | 184 | 300 | 214 | 47 | 125 | 430 | 203 | | | | | | | | |
| ***Eighth Ave & W. 38th St*** | Sidewalk A | 40 | 59 | 75 | 175 | 45 | 57 | 142 | 128 | 27 | 45 | 251 | 275 | | | | | | | | |
| | Sidewalk B | 67 | 246 | 121 | 35 | 52 | 151 | 35 | 18 | 133 | 287 | 45 | 72 | | | | | | | | |
| | Sidewalk C | 35 | 33 | 64 | 103 | 101 | 23 | 114 | 128 | 22 | 32 | 190 | 489 | | | | | | | | |
| | Sidewalk D | 81 | 198 | 27 | 28 | 139 | 157 | 57 | 61 | 153 | 288 | 5 | 17 | | | | | | | | |
| | Corner A & B | 27 | 85 | 79 | 26 | 194 | 154 | 159 | 122 | 13 | 24 | 11 | 16 | | | | | | | | |
| | Corner C & D | 27 | 32 | 9 | 12 | 149 | 109 | 109 | 81 | 16 | 16 | 12 | 16 | | | | | | | | |
| | Crosswalk (A-B-C) | 34 | 21 | 51 | 95 | 21 | 31 | 133 | 103 | 7 | 27 | 26 | 21 | | | | | | | | |
| | Crosswalk (C-D-A) | 32 | 31 | 67 | 176 | 65 | 80 | 96 | 73 | 54 | 39 | 12 | 14 | | | | | | | | |

# Appendix S.5.2

**PEDESTRIAN VOLUMES (SIDEWALKS, CORNERS, AND CROSSWALKS)**
**2010 FUTURE WITH THE PROPOSED ACTION**

| Intersection | Elements | Weekday AM Peak 15-Min. | | | | Weekday MD Peak 15-Min. | | | | Weekday PM Peak 15-Min. | | | | Special Events Evening Peak 15-Min. | | | | Special Events Sunday Peak 15-Min. | | | |
|---|---|---|---|---|---|---|---|---|---|---|---|---|---|---|---|---|---|---|---|---|---|
| ***Eighth Ave & W. 39th St*** | Sidewalk A | 52 | 74 | 66 | 538 | 117 | 83 | 269 | 396 | 115 | 46 | 651 | 234 | | | | | | | | |
| | Sidewalk B | 91 | 1265 | 234 | 56 | 283 | 476 | 139 | 184 | 889 | 331 | 29 | 144 | | | | | | | | |
| | Sidewalk C | 133 | 50 | 132 | 432 | 137 | 221 | 323 | 265 | 49 | 192 | 626 | 198 | | | | | | | | |
| | Sidewalk D | 156 | 586 | 98 | 55 | 438 | 335 | 154 | 106 | 810 | 174 | 75 | 80 | | | | | | | | |
| | Corner A & B | 11 | 23 | 54 | 22 | 25 | 40 | 32 | 36 | 20 | 26 | 9 | 87 | | | | | | | | |
| | Corner C & D | 37 | 20 | 17 | 53 | 36 | 67 | 24 | 28 | 12 | 21 | 11 | 17 | | | | | | | | |
| | Crosswalk (A-B-C) | 114 | 20 | 107 | 625 | 106 | 109 | 233 | 302 | 57 | 93 | 467 | 319 | | | | | | | | |
| | Crosswalk (C-D-A) | 74 | 76 | 148 | 466 | 98 | 696 | 375 | 329 | 68 | 165 | 1050 | 186 | | | | | | | | |
| ***Eighth Ave & W. 42nd St*** | Sidewalk A | 497 | 320 | 612 | 154 | 388 | 345 | 268 | 301 | 441 | 643 | 258 | 1428 | | | | | | | | |
| | Sidewalk B | 447 | 152 | 342 | 132 | 288 | 321 | 414 | 360 | 397 | 371 | 333 | 302 | | | | | | | | |
| | Sidewalk C | 1009 | 396 | 555 | 136 | 571 | 494 | 478 | 513 | 732 | 1235 | 441 | 715 | | | | | | | | |
| | Sidewalk D | 750 | 87 | 402 | 253 | 349 | 379 | 374 | 382 | 230 | 1520 | 532 | 544 | | | | | | | | |
| | Corner A & B | 41 | 42 | 56 | 44 | 4 | 42 | 69 | 102 | 24 | 162 | 92 | 179 | | | | | | | | |
| | Corner C & D | 7 | 224 | 43 | 38 | 24 | 109 | 89 | 77 | 38 | 69 | 58 | 88 | | | | | | | | |
| | Crosswalk (A-B-C) | 278 | 395 | 428 | 136 | 279 | 280 | 427 | 401 | 513 | 341 | 562 | 659 | | | | | | | | |
| | Crosswalk (C-D-A) | 1207 | 300 | 878 | 282 | 403 | 486 | 314 | 333 | 479 | 1174 | 299 | 1249 | | | | | | | | |
| ***Seventh Ave & W. 31st St*** | Sidewalk A | 131 | 120 | 80 | 485 | 213 | 188 | 248 | 293 | 306 | 191 | 411 | 314 | | | | | | | | |
| | Sidewalk B | 299 | 585 | 325 | 259 | 366 | 186 | 118 | 208 | 424 | 234 | 291 | 402 | | | | | | | | |
| | Sidewalk C | 159 | 126 | 102 | 342 | 148 | 136 | 179 | 148 | 235 | 336 | 316 | 323 | | | | | | | | |
| | Sidewalk D | 97 | 703 | 107 | 59 | 296 | 233 | 50 | 42 | 248 | 271 | 209 | 212 | | | | | | | | |
| | Corner A & B | 16 | 1 | 138 | 18 | 16 | 15 | 131 | 34 | 17 | 22 | 100 | 37 | | | | | | | | |
| | Corner C & D | 10 | 48 | 19 | 42 | 37 | 37 | 11 | 16 | 26 | 26 | 26 | 21 | | | | | | | | |
| | Crosswalk (A-B-C) | 392 | 203 | 103 | 295 | 247 | 204 | 211 | 286 | 352 | 371 | 289 | 260 | | | | | | | | |
| | Crosswalk (C-D-A) | 135 | 176 | 98 | 403 | 129 | 118 | 155 | 176 | 256 | 336 | 339 | 275 | | | | | | | | |
| ***Seventh Ave & W. 33rd St*** | Sidewalk A | 189 | 234 | 193 | 391 | 247 | 205 | 342 | 273 | 234 | 357 | 295 | 335 | | | | | | | | |
| | Sidewalk B | 280 | 415 | 275 | 196 | 309 | 443 | 225 | 176 | 268 | 433 | 275 | 327 | | | | | | | | |
| | Sidewalk C | 385 | 184 | 360 | 233 | 270 | 270 | 337 | 248 | 305 | 323 | 283 | 246 | | | | | | | | |
| | Sidewalk D | 538 | 210 | 214 | 436 | 276 | 248 | 379 | 340 | 282 | 417 | 285 | 437 | | | | | | | | |
| | Corner A & B | 43 | 37 | 36 | 61 | 18 | 32 | 63 | 98 | 30 | 18 | 33 | 79 | | | | | | | | |
| | Corner C & D | 26 | 63 | 63 | 37 | 48 | 63 | 42 | 42 | 53 | 26 | 31 | 53 | | | | | | | | |
| | Crosswalk (A-B-C) | 346 | 297 | 330 | 289 | 274 | 310 | 314 | 307 | 354 | 475 | 282 | 347 | | | | | | | | |
| | Crosswalk (C-D-A) | 465 | 428 | 301 | 369 | 383 | 409 | 361 | 335 | 343 | 485 | 323 | 412 | | | | | | | | |
| ***Seventh Ave & W. 34th St*** | Sidewalk A | 189 | 94 | 449 | 123 | 231 | 203 | 248 | 228 | 761 | 353 | 432 | 602 | | | | | | | | |
| | Sidewalk B | 573 | 67 | 173 | 193 | 179 | 155 | 311 | 233 | 264 | 762 | 872 | 151 | | | | | | | | |
| | Sidewalk C | 463 | 343 | 208 | 187 | 224 | 210 | 230 | 185 | 325 | 514 | 267 | 595 | | | | | | | | |
| | Sidewalk D | 185 | 184 | 988 | 184 | 142 | 145 | 159 | 214 | 419 | 360 | 403 | 592 | | | | | | | | |
| | Corner A & B | 210 | 31 | 34 | 104 | 331 | 372 | 291 | 318 | 538 | 494 | 505 | 437 | | | | | | | | |
| | Corner C & D | 72 | 51 | 43 | 32 | 272 | 271 | 198 | 222 | 476 | 379 | 372 | 327 | | | | | | | | |
| | Crosswalk (A-B-C) | 512 | 131 | 283 | 147 | 365 | 357 | 231 | 243 | 126 | 132 | 104 | 101 | | | | | | | | |
| | Crosswalk (C-D-A) | 528 | 214 | 920 | 219 | 229 | 248 | 269 | 270 | 182 | 139 | 92 | 145 | | | | | | | | |
| ***Sixth Ave & W. 33rd St*** | Sidewalk A | 198 | 73 | 205 | 151 | 147 | 82 | 338 | 289 | 193 | 288 | 619 | 490 | | | | | | | | |
| | Sidewalk B | 221 | 179 | 226 | 46 | 236 | 176 | 114 | 174 | 328 | 268 | 120 | 483 | | | | | | | | |
| | Sidewalk C | 302 | 88 | 157 | 172 | 212 | 246 | 239 | 237 | 246 | 475 | 242 | 287 | | | | | | | | |
| | Sidewalk D | 382 | 255 | 232 | 313 | 281 | 323 | 211 | 163 | 584 | 694 | 344 | 525 | | | | | | | | |
| | Corner A & B | 16 | 1 | 16 | 16 | 37 | 37 | 31 | 31 | 32 | 33 | 31 | 74 | | | | | | | | |
| | Corner C & D | 0 | 58 | 29 | 84 | 31 | 31 | 70 | 102 | 63 | 63 | 73 | 139 | | | | | | | | |
| | Crosswalk (A-B-C) | 319 | 131 | 161 | 199 | 287 | 297 | 289 | 229 | 280 | 522 | 402 | 350 | | | | | | | | |
| | Crosswalk (C-D-A) | 344 | 153 | 341 | 157 | 260 | 255 | 330 | 311 | 452 | 621 | 356 | 393 | | | | | | | | |
| ***Sixth Ave & W. 34th St*** | Sidewalk A | 14 | 22 | 1 | 1 | 28 | 49 | 9 | 8 | 36 | 46 | 2 | 2 | 0 | 0 | 0 | 0 | 0 | 0 | 0 | 0 |
| | Sidewalk B | 474 | 365 | 357 | 148 | 801 | 897 | 368 | 562 | 718 | 786 | 616 | 873 | 142 | 155 | 195 | 435 | 439 | 320 | 319 | 238 |
| | Sidewalk C | 410 | 105 | 382 | 348 | 285 | 318 | 789 | 846 | 581 | 513 | 423 | 535 | 219 | 268 | 230 | 174 | 408 | 344 | 210 | 180 |
| | Sidewalk D | 0 | 0 | 14 | 22 | 0 | 1 | 28 | 48 | 0 | 0 | 36 | 46 | 0 | 0 | 0 | 0 | 0 | 0 | 0 | 0 |
| | Corner A & B | 1 | 1 | 84 | 47 | 8 | 6 | 184 | 233 | 2 | 2 | 67 | 411 | 0 | 0 | 51 | 141 | 0 | 0 | 84 | 198 |
| | Corner C & D | 40 | 23 | 0 | 0 | 85 | 50 | 0 | 0 | 29 | 18 | 0 | 0 | 16 | 55 | 0 | 0 | 39 | 21 | 0 | 0 |
| | Crosswalk (A-B-C) | 161 | 430 | 427 | 280 | 808 | 657 | 558 | 705 | 885 | 534 | 304 | 716 | 232 | 130 | 171 | 196 | 309 | 431 | 376 | 322 |
| | Crosswalk (C-D-A) | 604 | 93 | 1 | 0 | 801 | 661 | 2 | 2 | 662 | 742 | 0 | 1 | 198 | 298 | 0 | 0 | 496 | 399 | 0 | 0 |
| ***Broadway & W. 34th St*** | Sidewalk A | 394 | 166 | 724 | 165 | 350 | 507 | 698 | 774 | 737 | 1244 | 742 | 1054 | 394 | 306 | 191 | 291 | 476 | 572 | 449 | 395 |
| | Sidewalk B | 3 | 1 | 14 | 22 | 13 | 11 | 28 | 49 | 3 | 4 | 36 | 46 | 0 | 0 | 0 | 0 | 0 | 0 | 0 | 0 |
| | Sidewalk C | 14 | 22 | 1 | 1 | 28 | 49 | 7 | 8 | 36 | 46 | 2 | 2 | 0 | 0 | 0 | 0 | 0 | 0 | 0 | 0 |
| | Sidewalk D | 553 | 331 | 516 | 187 | 851 | 790 | 669 | 417 | 896 | 859 | 856 | 962 | 310 | 274 | 393 | 475 | 565 | 512 | 596 | 525 |
| | Corner A & B | 235 | 49 | 0 | 0 | 127 | 168 | 0 | 0 | 109 | 440 | 0 | 0 | 39 | 74 | 0 | 0 | 105 | 160 | 0 | 0 |
| | Corner C & D | 0 | 0 | 47 | 236 | 0 | 0 | 262 | 368 | 0 | 0 | 517 | 497 | 0 | 0 | 123 | 111 | 0 | 0 | 180 | 55 |
| | Crosswalk (A-B-C) | 1067 | 196 | 3 | 1 | 975 | 676 | 5 | 5 | 493 | 1104 | 1 | 3 | 343 | 170 | 0 | 0 | 332 | 413 | 0 | 0 |
| | Crosswalk (C-D-A) | 608 | 94 | 529 | 97 | 650 | 827 | 867 | 971 | 664 | 745 | 731 | 1038 | 198 | 299 | 261 | 148 | 296 | 299 | 275 | 265 |
| ***Blvd & W. 33rd St*** | Sidewalk A | 12 | 27 | 92 | 19 | 76 | 111 | 64 | 85 | 45 | 52 | 15 | 144 | 3 | 683 | 20 | 70 | 874 | 47 | 77 | 55 |
| | Sidewalk B | 36 | 8 | 15 | 77 | 48 | 41 | 91 | 118 | 13 | 81 | 118 | 50 | 4 | 57 | 12 | 824 | 65 | 28 | 1032 | 54 |
| | Sidewalk C | 14 | 65 | 0 | 0 | 81 | 110 | 0 | 0 | 123 | 47 | 0 | 0 | 16 | 2561 | 0 | 0 | 2544 | 54 | 0 | 0 |
| | Sidewalk D | 0 | 0 | 0 | 26 | 0 | 0 | 5 | 22 | 0 | 0 | 34 | 28 | 0 | 0 | 0 | 3048 | 0 | 0 | 2970 | 16 |
| | Corner A & B | 0 | 0 | 17 | 2 | 3 | 3 | 8 | 8 | 0 | 0 | 2 | 36 | 0 | 0 | 2 | 3 | 0 | 0 | 4 | 8 |
| | Corner C & D | 0 | 0 | 0 | 0 | 0 | 0 | 0 | 0 | 0 | 0 | 0 | 0 | 0 | 0 | 0 | 0 | 0 | 0 | 0 | 0 |
| | Crosswalk (A-B-C) | 12 | 58 | 19 | 9 | 82 | 108 | 40 | 34 | 78 | 46 | 15 | 48 | 9 | 557 | 3 | 318 | 770 | 50 | 316 | 20 |
| | Crosswalk (C-D-A) | 2 | 17 | 51 | 16 | 0 | 0 | 53 | 69 | 35 | 1 | 17 | 95 | 6 | 340 | 14 | 227 | 159 | 6 | 228 | 45 |
| ***Blvd & W. 34th St*** | Sidewalk A | 41 | 328 | 312 | 29 | 237 | 228 | 153 | 151 | 458 | 83 | 49 | 429 | 9 | 204 | 4 | 8 | 307 | 57 | 22 | 36 |
| | Sidewalk B | 3 | 3 | 26 | 158 | 33 | 25 | 200 | 196 | 8 | 6 | 238 | 62 | 3 | 2 | 5 | 233 | 16 | 13 | 310 | 52 |
| | Sidewalk C | 23 | 127 | 36 | 9 | 113 | 121 | 46 | 40 | 215 | 69 | 11 | 80 | 53 | 394 | 4 | 57 | 404 | 57 | 64 | 26 |
| | Sidewalk D | 59 | 11 | 11 | 100 | 63 | 57 | 35 | 107 | 15 | 90 | 63 | 173 | 54 | 59 | 2 | 504 | 63 | 32 | 535 | 120 |
| | Corner A & B | 3 | 0 | 1 | 0 | 9 | 0 | 2 | 0 | 8 | 0 | 1 | 0 | 0 | 0 | 0 | 0 | 0 | 0 | 0 | 0 |
| | Corner C & D | 0 | 0 | 0 | 0 | 0 | 0 | 0 | 0 | 0 | 0 | 0 | 0 | 0 | 47 | 0 | 0 | 45 | 0 | 0 | 0 |
| | Crosswalk (A-B-C) | 35 | 232 | 78 | 13 | 241 | 236 | 75 | 66 | 349 | 72 | 19 | 119 | 8 | 217 | 5 | 22 | 310 | 56 | 30 | 23 |
| | Crosswalk (C-D-A) | 36 | 383 | 405 | 36 | 112 | 116 | 137 | 148 | 503 | 91 | 53 | 539 | 74 | 378 | 5 | 25 | 398 | 74 | 32 | 41 |

# Appendix S.5.2

**PEDESTRIAN VOLUMES (SIDEWALKS, CORNERS, AND CROSSWALKS)**
**2025 FUTURE WITH THE PROPOSED ACTION**

| Intersection | Elements | Weekday AM Peak 15-Min. | | | | Weekday MD Peak 15-Min. | | | | Weekday PM Peak 15-Min. | | | | Special Events Evening Peak 15-Min. | | | | Special Events Sunday Peak 15-Min. | | | |
|---|---|---|---|---|---|---|---|---|---|---|---|---|---|---|---|---|---|---|---|---|---|
| ***Rt 9A & West 30th St*** | Sidewalk A | 0 | 0 | 23 | 44 | 0 | 0 | 14 | 23 | 0 | 0 | 40 | 19 | 0 | 0 | 18 | 15 | 0 | 0 | 21 | 28 |
| | Sidewalk B | 0 | 0 | 0 | 0 | 2 | 0 | 0 | 0 | 0 | 7 | 1 | 1 | 4 | 6 | 4 | 3 | 0 | 8 | 2 | 1 |
| | Sidewalk C | 2 | 0 | 2 | 2 | 1 | 0 | 1 | 1 | 1 | 2 | 1 | 1 | 0 | 0 | 1 | 2 | 1 | 1 | 0 | 0 |
| | Sidewalk D | 21 | 28 | 0 | 0 | 15 | 21 | 0 | 0 | 33 | 19 | 0 | 0 | 18 | 16 | 0 | 0 | 21 | 28 | 0 | 0 |
| | Corner A & B | 0 | 0 | 0 | 0 | 0 | 0 | 0 | 0 | 0 | 0 | 4 | 0 | 0 | 0 | 4 | 2 | 0 | 0 | 1 | 0 |
| | Corner C & D | 0 | 0 | 0 | 0 | 0 | 0 | 0 | 0 | 0 | 0 | 0 | 0 | 0 | 0 | 0 | 0 | 0 | 0 | 0 | 0 |
| | Crosswalk (A-B-C) | 0 | 0 | 2 | 0 | 0 | 0 | 3 | 3 | 0 | 0 | 0 | 8 | 0 | 0 | 437 | 1 | 0 | 1 | 0 | 429 |
| | Crosswalk (C-D-A) | 8 | 2 | 26 | 39 | 3 | 2 | 16 | 33 | 2 | 5 | 30 | 33 | 435 | 0 | 26 | 16 | 0 | 424 | 21 | 26 |
| ***Rt 9A & West 34th St*** | Sidewalk A | 1 | 1 | 0 | 7 | 0 | 0 | 4 | 7 | 0 | 0 | 8 | 3 | 0 | 0 | 0 | 957 | 0 | 0 | 1094 | 20 |
| | Sidewalk B | 0 | 3 | 4 | 11 | 1 | 5 | 11 | 18 | 6 | 1 | 8 | 13 | 1 | 696 | 139 | 2 | 683 | 3 | 3 | 135 |
| | Sidewalk C | 30 | 21 | 0 | 0 | 60 | 49 | 2 | 0 | 46 | 59 | 0 | 0 | 993 | 2 | 1 | 0 | 66 | 1018 | 6 | 0 |
| | Sidewalk D | 10 | 3 | 0 | 0 | 3 | 5 | 2 | 0 | 6 | 0 | 0 | 0 | 0 | 435 | 0 | 0 | 439 | 20 | 0 | 0 |
| | Corner A & B | 3 | 0 | 3 | 1 | 8 | 8 | 8 | 8 | 3 | 15 | 4 | 15 | 0 | 0 | 0 | 143 | 0 | 0 | 138 | 0 |
| | Corner C & D | 3 | 0 | 3 | 0 | 4 | 3 | 4 | 3 | 2 | 10 | 2 | 9 | 0 | 0 | 0 | 0 | 0 | 0 | 0 | 0 |
| | Crosswalk (A-B-C) | 3 | 8 | 0 | 2 | 9 | 10 | 3 | 2 | 8 | 7 | 12 | 0 | 0 | 0 | 1 | 557 | 0 | 0 | 547 | 0 |
| | Crosswalk (C-D-A) | 33 | 19 | 0 | 4 | 61 | 48 | 3 | 4 | 46 | 47 | 0 | 3 | 435 | 0 | 10 | 16 | 67 | 477 | 15 | 15 |
| ***Rt 9A & West 39th St*** | Sidewalk A | 0 | 0 | 1 | 1 | 0 | 0 | 0 | 0 | 0 | 0 | 1 | 1 | | | | | | | | |
| | Sidewalk B | 0 | 0 | 0 | 0 | 8 | 4 | 0 | 0 | 3 | 0 | 0 | 0 | | | | | | | | |
| | Sidewalk C | 26 | 48 | 1 | 5 | 42 | 45 | 11 | 6 | 36 | 72 | 10 | 0 | | | | | | | | |
| | Sidewalk D | 0 | 3 | 0 | 0 | 1 | 15 | 0 | 0 | 8 | 2 | 0 | 0 | | | | | | | | |
| | Corner A & B | 1 | 2 | 0 | 0 | 0 | 0 | 0 | 0 | 0 | 0 | 0 | 0 | | | | | | | | |
| | Corner C & D | 0 | 0 | 0 | 0 | 0 | 0 | 0 | 0 | 0 | 2 | 0 | 0 | | | | | | | | |
| | Crosswalk (A-B-C) | 2 | 0 | 0 | 0 | 0 | 0 | 7 | 3 | 0 | 0 | 3 | 0 | | | | | | | | |
| | Crosswalk (C-D-A) | 59 | 53 | 37 | 48 | 50 | 33 | 32 | 17 | 72 | 78 | 45 | 32 | | | | | | | | |
| ***Rt 9A & West 40th St*** | Sidewalk A | 0 | 0 | 1 | 1 | 0 | 1 | 1 | 0 | 1 | 3 | 1 | 1 | | | | | | | | |
| | Sidewalk B | 0 | 0 | 0 | 0 | 3 | 0 | 0 | 2 | 2 | 3 | 1 | 2 | | | | | | | | |
| | Sidewalk C | 0 | 0 | 0 | 0 | 0 | 1 | 2 | 0 | 0 | 0 | 1 | 0 | | | | | | | | |
| | Sidewalk D | 1 | 1 | 0 | 0 | 0 | 0 | 0 | 0 | 1 | 1 | 0 | 0 | | | | | | | | |
| | Corner A & B | 0 | 0 | 0 | 0 | 0 | 0 | 0 | 1 | 0 | 0 | 0 | 1 | | | | | | | | |
| | Corner C & D | 0 | 0 | 0 | 0 | 1 | 0 | 0 | 0 | 0 | 0 | 0 | 0 | | | | | | | | |
| | Crosswalk (A-B-C) | 0 | 0 | 2 | 0 | 0 | 0 | 1 | 4 | 0 | 0 | 1 | 0 | | | | | | | | |
| | Crosswalk (C-D-A) | 0 | 2 | 29 | 51 | 0 | 1 | 21 | 19 | 1 | 2 | 48 | 40 | | | | | | | | |
| ***Rt 9A & West 42nd St*** | Sidewalk A | 2 | 0 | 4 | 0 | 2 | 7 | 0 | 0 | 30 | 0 | 0 | 1 | | | | | | | | |
| | Sidewalk B | 1 | 8 | 18 | 34 | 5 | 13 | 46 | 57 | 5 | 28 | 63 | 47 | | | | | | | | |
| | Sidewalk C | 35 | 41 | 1 | 4 | 56 | 57 | 7 | 2 | 66 | 52 | 10 | 8 | | | | | | | | |
| | Sidewalk D | 3 | 4 | 0 | 3 | 0 | 0 | 2 | 2 | 1 | 9 | 1 | 0 | | | | | | | | |
| | Corner A & B | 0 | 0 | 0 | 0 | 3 | 0 | 6 | 0 | 25 | 0 | 6 | 0 | | | | | | | | |
| | Corner C & D | 4 | 0 | 0 | 0 | 0 | 1 | 0 | 0 | 2 | 4 | 0 | 0 | | | | | | | | |
| | Crosswalk (A-B-C) | 24 | 31 | 4 | 14 | 49 | 62 | 12 | 4 | 58 | 53 | 4 | 20 | | | | | | | | |
| | Crosswalk (C-D-A) | 28 | 33 | 35 | 49 | 49 | 51 | 38 | 38 | 38 | 48 | 16 | 17 | | | | | | | | |
| ***Eleventh Ave & West 29th*** | Sidewalk A | 0 | 0 | 66 | 38 | 2 | 1 | 166 | 157 | 0 | 4 | 52 | 81 | | | | | | | | |
| | Sidewalk B | 108 | 53 | 4 | 32 | 232 | 289 | 35 | 43 | 57 | 148 | 63 | 25 | | | | | | | | |
| | Sidewalk C | 7 | 15 | 89 | 52 | 33 | 20 | 199 | 236 | 19 | 4 | 47 | 102 | | | | | | | | |
| | Sidewalk D | 53 | 37 | 0 | 0 | 160 | 151 | 0 | 0 | 38 | 53 | 6 | 2 | | | | | | | | |
| | Corner A & B | 0 | 0 | 15 | 2 | 0 | 0 | 29 | 21 | 0 | 1 | 13 | 30 | | | | | | | | |
| | Corner C & D | 0 | 4 | 0 | 0 | 3 | 4 | 0 | 0 | 2 | 3 | 1 | 0 | | | | | | | | |
| | Crosswalk (A-B-C) | 1 | 14 | 90 | 50 | 3 | 11 | 207 | 260 | 27 | 11 | 44 | 113 | | | | | | | | |
| | Crosswalk (C-D-A) | 0 | 0 | 54 | 39 | 2 | 1 | 158 | 154 | 2 | 0 | 41 | 52 | | | | | | | | |
| ***Eleventh Ave & West 30th*** | Sidewalk A | 2 | 12 | 40 | 12 | 14 | 16 | 111 | 104 | 29 | 18 | 34 | 56 | 0 | 0 | 1 | 3 | 509 | 0 | 13 | 18 |
| | Sidewalk B | 104 | 64 | 65 | 59 | 320 | 380 | 208 | 236 | 64 | 116 | 62 | 68 | 7 | 9 | 17 | 1142 | 44 | 58 | 1156 | 54 |
| | Sidewalk C | 12 | 10 | 125 | 66 | 35 | 33 | 303 | 366 | 13 | 16 | 82 | 164 | 2 | 38 | 53 | 5 | 75 | 4 | 55 | 136 |
| | Sidewalk D | 81 | 52 | 1 | 0 | 234 | 223 | 3 | 2 | 61 | 92 | 6 | 0 | 95 | 4 | 0 | 1 | 46 | 410 | 2 | 0 |
| | Corner A & B | 0 | 6 | 6 | 6 | 19 | 16 | 50 | 43 | 4 | 15 | 10 | 14 | 0 | 0 | 3 | 0 | 0 | 0 | 5 | 9 |
| | Corner C & D | 5 | 4 | 0 | 4 | 16 | 14 | 16 | 10 | 2 | 17 | 2 | 9 | 0 | 0 | 0 | 0 | 2 | 0 | 0 | 0 |
| | Crosswalk (A-B-C) | 26 | 35 | 114 | 77 | 92 | 110 | 376 | 367 | 52 | 30 | 87 | 104 | 5 | 1180 | 52 | 8 | 1191 | 24 | 70 | 147 |
| | Crosswalk (C-D-A) | 19 | 24 | 71 | 32 | 57 | 59 | 184 | 181 | 27 | 18 | 56 | 90 | 3 | 44 | 135 | 4 | 88 | 13 | 34 | 471 |
| ***Eleventh Ave & West 33rd*** | Sidewalk A | 0 | 3 | 68 | 66 | 2 | 2 | 105 | 137 | 0 | 3 | 88 | 78 | 0 | 51 | 6 | 3654 | 0 | 1 | 4489 | 46 |
| | Sidewalk B | 122 | 93 | 49 | 40 | 313 | 372 | 175 | 214 | 108 | 149 | 51 | 79 | 22 | 16 | 13 | 873 | 71 | 90 | 894 | 47 |
| | Sidewalk C | 51 | 80 | 116 | 115 | 243 | 211 | 301 | 378 | 98 | 62 | 132 | 132 | 4 | 1162 | 7 | 8 | 1603 | 27 | 42 | 49 |
| | Sidewalk D | 30 | 15 | 1 | 4 | 91 | 84 | 0 | 0 | 15 | 26 | 1 | 0 | 4 | 4 | 0 | 1 | 9 | 14 | 0 | 2 |
| | Corner A & B | 0 | 0 | 8 | 11 | 1 | 0 | 99 | 82 | 0 | 0 | 26 | 19 | 0 | 0 | 4 | 18 | 0 | 0 | 28 | 39 |
| | Corner C & D | 11 | 11 | 0 | 0 | 131 | 130 | 0 | 0 | 7 | 8 | 0 | 0 | 1 | 1 | 1 | 0 | 8 | 10 | 0 | 0 |
| | Crosswalk (A-B-C) | 19 | 29 | 125 | 80 | 64 | 62 | 185 | 288 | 41 | 37 | 88 | 157 | 1 | 859 | 5 | 6 | 587 | 12 | 305 | 50 |
| | Crosswalk (C-D-A) | 18 | 45 | 59 | 32 | 65 | 60 | 92 | 100 | 54 | 35 | 40 | 48 | 1 | 1160 | 2 | 2 | 1849 | 10 | 17 | 23 |
| ***Eleventh Ave & West 34th*** | Sidewalk A | 8 | 20 | 134 | 45 | 16 | 32 | 147 | 156 | 12 | 16 | 138 | 84 | 12 | 6 | 12 | 290 | 10 | 6 | 838 | 114 |
| | Sidewalk B | 169 | 119 | 91 | 43 | 402 | 394 | 267 | 262 | 122 | 163 | 64 | 112 | 12 | 892 | 4 | 234 | 1503 | 113 | 289 | 88 |
| | Sidewalk C | 20 | 91 | 144 | 129 | 122 | 175 | 345 | 400 | 84 | 141 | 168 | 152 | 43 | 676 | 105 | 15 | 608 | 92 | 80 | 115 |
| | Sidewalk D | 82 | 77 | 36 | 21 | 154 | 190 | 75 | 52 | 154 | 91 | 52 | 58 | 6 | 3913 | 994 | 3 | 5302 | 42 | 67 | 1018 |
| | Corner A & B | 29 | 2 | 11 | 13 | 8 | 2 | 110 | 107 | 3 | 0 | 21 | 9 | 3 | 2 | 2 | 1 | 5 | 5 | 12 | 15 |
| | Corner C & D | 4 | 3 | 0 | 6 | 30 | 38 | 4 | 4 | 2 | 10 | 27 | 3 | 0 | 26 | 3 | 994 | 3 | 2 | 1154 | 0 |
| | Crosswalk (A-B-C) | 142 | 74 | 145 | 118 | 128 | 100 | 352 | 394 | 66 | 138 | 138 | 164 | 6 | 302 | 9 | 824 | 510 | 66 | 1306 | 115 |
| | Crosswalk (C-D-A) | 36 | 86 | 127 | 72 | 95 | 126 | 156 | 182 | 96 | 190 | 153 | 132 | 10 | 1480 | 3 | 1453 | 1793 | 73 | 2489 | 101 |
| ***Eleventh Ave & West 35th*** | Sidewalk A | 0 | 0 | 41 | 33 | 0 | 0 | 135 | 82 | 0 | 0 | 51 | 25 | | | | | | | | |
| | Sidewalk B | 291 | 302 | 84 | 62 | 395 | 374 | 133 | 133 | 116 | 106 | 38 | 38 | | | | | | | | |
| | Sidewalk C | 41 | 53 | 260 | 263 | 63 | 112 | 387 | 373 | 9 | 66 | 158 | 112 | | | | | | | | |
| | Sidewalk D | 137 | 45 | 0 | 0 | 150 | 154 | 0 | 0 | 140 | 86 | 0 | 0 | | | | | | | | |
| | Corner A & B | 0 | 0 | 34 | 39 | 0 | 0 | 69 | 70 | 0 | 0 | 14 | 9 | | | | | | | | |
| | Corner C & D | 4 | 5 | 0 | 0 | 27 | 27 | 0 | 0 | 3 | 3 | 0 | 0 | | | | | | | | |
| | Crosswalk (A-B-C) | 22 | 11 | 284 | 289 | 35 | 34 | 377 | 363 | 15 | 19 | 129 | 106 | | | | | | | | |
| | Crosswalk (C-D-A) | 23 | 40 | 22 | 21 | 35 | 75 | 68 | 70 | 14 | 93 | 16 | 19 | | | | | | | | |
| ***Eleventh Ave & West 36th*** | Sidewalk A | 0 | 0 | 78 | 26 | 0 | 0 | 128 | 58 | 0 | 0 | 59 | 42 | | | | | | | | |
| | Sidewalk B | 403 | 398 | 141 | 102 | 382 | 355 | 48 | 43 | 177 | 118 | 56 | 60 | | | | | | | | |
| | Sidewalk C | 182 | 189 | 588 | 1313 | 88 | 85 | 492 | 480 | 102 | 89 | 1057 | 327 | | | | | | | | |
| | Sidewalk D | 43 | 34 | 0 | 0 | 132 | 81 | 0 | 0 | 52 | 24 | 0 | 0 | | | | | | | | |
| | Corner A & B | 0 | 0 | 2 | 3 | 0 | 0 | 3 | 2 | 0 | 0 | 4 | 1 | | | | | | | | |
| | Corner C & D | 8 | 19 | 0 | 0 | 10 | 10 | 0 | 0 | 22 | 8 | 0 | 0 | | | | | | | | |
| | Crosswalk (A-B-C) | 85 | 8 | 456 | 468 | 32 | 17 | 394 | 377 | 13 | 15 | 194 | 157 | | | | | | | | |
| | Crosswalk (C-D-A) | 55 | 49 | 125 | 6 | 37 | 59 | 52 | 28 | 17 | 108 | 25 | 33 | | | | | | | | |

# Appendix S.5.2

**PEDESTRIAN VOLUMES (SIDEWALKS, CORNERS, AND CROSSWALKS)**
**2025 FUTURE WITH THE PROPOSED ACTION**

| Intersection | Elements | Weekday AM Peak 15-Min. | | | | Weekday MD Peak 15-Min. | | | | Weekday PM Peak 15-Min. | | | | Special Events Evening Peak 15-Min. | | | | Special Events Sunday Peak 15-Min. | | | |
|---|---|---|---|---|---|---|---|---|---|---|---|---|---|---|---|---|---|---|---|---|---|
| *Eleventh Ave & West 37th* | Sidewalk A | 2 | 2 | 31 | 22 | 1 | 1 | 112 | 28 | 0 | 0 | 59 | 13 | | | | | | | | |
| | Sidewalk B | 193 | 213 | 158 | 114 | 333 | 310 | 126 | 128 | 233 | 95 | 34 | 59 | | | | | | | | |
| | Sidewalk C | 25 | 28 | 297 | 315 | 23 | 33 | 342 | 303 | 19 | 24 | 253 | 101 | | | | | | | | |
| | Sidewalk D | 73 | 23 | 0 | 0 | 131 | 50 | 0 | 3 | 54 | 44 | 1 | 3 | | | | | | | | |
| | Corner A & B | 0 | 1 | 7 | 7 | 0 | 0 | 44 | 45 | 0 | 0 | 10 | 8 | | | | | | | | |
| | Corner C & D | 16 | 18 | 0 | 0 | 14 | 13 | 0 | 0 | 14 | 8 | 0 | 0 | | | | | | | | |
| | Crosswalk (A-B-C) | 33 | 11 | 304 | 304 | 23 | 24 | 347 | 312 | 11 | 38 | 242 | 98 | | | | | | | | |
| | Crosswalk (C-D-A) | 24 | 11 | 32 | 12 | 20 | 27 | 33 | 29 | 4 | 16 | 11 | 29 | | | | | | | | |
| *Eleventh Ave & West 38th* | Sidewalk A | 0 | 0 | 39 | 26 | 1 | 2 | 141 | 42 | 0 | 0 | 78 | 13 | | | | | | | | |
| | Sidewalk B | 67 | 105 | 32 | 30 | 215 | 181 | 130 | 139 | 232 | 42 | 19 | 31 | | | | | | | | |
| | Sidewalk C | 35 | 56 | 68 | 117 | 39 | 53 | 267 | 225 | 45 | 36 | 263 | 48 | | | | | | | | |
| | Sidewalk D | 31 | 21 | 4 | 0 | 112 | 28 | 3 | 2 | 59 | 10 | 12 | 1 | | | | | | | | |
| | Corner A & B | 0 | 0 | 12 | 15 | 0 | 0 | 52 | 52 | 0 | 0 | 8 | 8 | | | | | | | | |
| | Corner C & D | 13 | 31 | 0 | 0 | 17 | 16 | 0 | 0 | 29 | 9 | 0 | 0 | | | | | | | | |
| | Crosswalk (A-B-C) | 7 | 8 | 63 | 97 | 47 | 42 | 227 | 189 | 6 | 17 | 230 | 41 | | | | | | | | |
| | Crosswalk (C-D-A) | 9 | 16 | 9 | 11 | 19 | 27 | 23 | 21 | 7 | 29 | 7 | 8 | | | | | | | | |
| *Eleventh Ave & West 39th* | Sidewalk A | 0 | 1 | 36 | 161 | 6 | 8 | 168 | 62 | 2 | 2 | 80 | 23 | 1 | 0 | 11 | 10 | 0 | 0 | 155 | 30 |
| | Sidewalk B | 66 | 112 | 5 | 6 | 183 | 136 | 5 | 34 | 290 | 42 | 2 | 13 | 8 | 5 | 7 | 1 | 359 | 38 | 90 | 3 |
| | Sidewalk C | 35 | 75 | 77 | 189 | 49 | 58 | 179 | 144 | 79 | 58 | 339 | 43 | 6 | 269 | 8 | 241 | 445 | 53 | 693 | 34 |
| | Sidewalk D | 39 | 68 | 27 | 47 | 148 | 42 | 31 | 30 | 78 | 14 | 35 | 66 | 8 | 208 | 175 | 0 | 830 | 23 | 48 | 255 |
| | Corner A & B | 0 | 1 | 0 | 2 | 0 | 0 | 0 | 0 | 6 | 0 | 7 | 0 | 9 | 4 | 0 | 3 | 0 | 0 | 0 | 0 |
| | Corner C & D | 1 | 38 | 12 | 3 | 5 | 4 | 0 | 0 | 46 | 2 | 14 | 2 | 1 | 136 | 0 | 0 | 190 | 0 | 49 | 0 |
| | Crosswalk (A-B-C) | 28 | 7 | 69 | 133 | 26 | 18 | 186 | 142 | 5 | 11 | 288 | 45 | 1 | 1 | 8 | 5 | 58 | 4 | 400 | 39 |
| | Crosswalk (C-D-A) | 49 | 38 | 34 | 131 | 39 | 43 | 157 | 53 | 34 | 62 | 77 | 17 | 2 | 37 | 19 | 14 | 144 | 42 | 542 | 28 |
| *Eleventh Ave & West 40th* | Sidewalk A | 67 | 21 | 47 | 52 | 31 | 28 | 185 | 42 | 17 | 66 | 166 | 25 | | | | | | | | |
| | Sidewalk B | 57 | 100 | 27 | 79 | 144 | 98 | 39 | 124 | 302 | 33 | 8 | 156 | | | | | | | | |
| | Sidewalk C | 2 | 1 | 63 | 108 | 0 | 1 | 171 | 125 | 2 | 10 | 296 | 47 | | | | | | | | |
| | Sidewalk D | 42 | 86 | 0 | 1 | 174 | 78 | 4 | 4 | 187 | 23 | 1 | 0 | | | | | | | | |
| | Corner A & B | 9 | 12 | 9 | 11 | 0 | 7 | 2 | 5 | 0 | 0 | 4 | 0 | | | | | | | | |
| | Corner C & D | 8 | 8 | 7 | 7 | 0 | 3 | 0 | 3 | 1 | 1 | 0 | 0 | | | | | | | | |
| | Crosswalk (A-B-C) | 10 | 68 | 64 | 106 | 10 | 93 | 169 | 128 | 2 | 144 | 282 | 39 | | | | | | | | |
| | Crosswalk (C-D-A) | 1 | 0 | 43 | 84 | 0 | 6 | 170 | 63 | 9 | 13 | 96 | 19 | | | | | | | | |
| *Eleventh Ave & West 42nd* | Sidewalk A | 56 | 0 | 2 | 91 | 28 | 0 | 47 | 78 | 141 | 145 | 97 | 79 | 114 | 44 | 25 | 53 | 106 | 55 | 63 | 40 |
| | Sidewalk B | 56 | 80 | 112 | 5 | 96 | 111 | 108 | 73 | 49 | 60 | 176 | 110 | 7 | 25 | 116 | 19 | 291 | 44 | 153 | 99 |
| | Sidewalk C | 218 | 207 | 59 | 121 | 179 | 340 | 170 | 112 | 118 | 466 | 297 | 37 | 69 | 58 | 17 | 12 | 295 | 269 | 251 | 35 |
| | Sidewalk D | 74 | 55 | 51 | 25 | 94 | 81 | 71 | 63 | 81 | 55 | 59 | 62 | 44 | 35 | 15 | 6 | 229 | 49 | 101 | 123 |
| | Corner A & B | 0 | 0 | 2 | 5 | 0 | 0 | 0 | 0 | 0 | 0 | 3 | 1 | 4 | 10 | 11 | 1 | 0 | 0 | 7 | 12 |
| | Corner C & D | 23 | 12 | 0 | 0 | 43 | 20 | 4 | 1 | 114 | 11 | 7 | 0 | 4 | 3 | 0 | 0 | 22 | 11 | 35 | 1 |
| | Crosswalk (A-B-C) | 125 | 4 | 88 | 195 | 112 | 81 | 158 | 171 | 156 | 156 | 121 | 87 | 115 | 36 | 39 | 47 | 175 | 97 | 296 | 77 |
| | Crosswalk (C-D-A) | 155 | 156 | 80 | 117 | 121 | 285 | 93 | 127 | 95 | 406 | 124 | 82 | 75 | 48 | 45 | 58 | 286 | 226 | 188 | 60 |
| *Tenth Ave & W. 29th St* | Sidewalk A | 17 | 14 | 207 | 150 | 32 | 50 | 489 | 574 | 10 | 28 | 101 | 213 | | | | | | | | |
| | Sidewalk B | 76 | 53 | 31 | 33 | 142 | 193 | 57 | 113 | 43 | 95 | 24 | 61 | | | | | | | | |
| | Sidewalk C | 28 | 32 | 64 | 45 | 81 | 99 | 150 | 195 | 28 | 42 | 34 | 84 | | | | | | | | |
| | Sidewalk D | 195 | 127 | 28 | 20 | 374 | 516 | 22 | 61 | 85 | 232 | 15 | 51 | | | | | | | | |
| | Corner A & B | 7 | 7 | 7 | 3 | 14 | 19 | 2 | 3 | 9 | 11 | 3 | 9 | | | | | | | | |
| | Corner C & D | 1 | 2 | 6 | 7 | 3 | 1 | 2 | 6 | 6 | 1 | 8 | 4 | | | | | | | | |
| | Crosswalk (A-B-C) | 31 | 28 | 72 | 55 | 58 | 109 | 148 | 218 | 15 | 60 | 39 | 86 | | | | | | | | |
| | Crosswalk (C-D-A) | 46 | 28 | 201 | 135 | 56 | 146 | 427 | 544 | 18 | 80 | 99 | 220 | | | | | | | | |
| *Tenth Ave & W. 30th St* | Sidewalk A | 136 | 158 | 202 | 161 | 434 | 456 | 650 | 711 | 138 | 117 | 117 | 189 | 24 | 449 | 40 | 244 | 581 | 117 | 362 | 147 |
| | Sidewalk B | 101 | 51 | 86 | 96 | 137 | 208 | 319 | 360 | 48 | 146 | 79 | 87 | 11 | 8 | 6 | 26 | 55 | 34 | 112 | 79 |
| | Sidewalk C | 25 | 40 | 100 | 71 | 76 | 109 | 218 | 263 | 37 | 44 | 50 | 110 | 5 | 3 | 23 | 13 | 29 | 15 | 52 | 70 |
| | Sidewalk D | 229 | 164 | 21 | 19 | 555 | 668 | 32 | 56 | 114 | 243 | 25 | 41 | 17 | 20 | 8 | 11 | 117 | 108 | 37 | 14 |
| | Corner A & B | 2 | 4 | 11 | 2 | 20 | 24 | 2 | 1 | 8 | 5 | 3 | 12 | 10 | 1053 | 0 | 0 | 1073 | 1 | 3 | 1 |
| | Corner C & D | 0 | 0 | 1 | 0 | 0 | 0 | 0 | 3 | 0 | 0 | 1 | 0 | 2 | 0 | 1 | 1 | 0 | 1 | 0 | 0 |
| | Crosswalk (A-B-C) | 117 | 116 | 99 | 62 | 376 | 442 | 183 | 232 | 91 | 120 | 42 | 115 | 8 | 38 | 16 | 9 | 152 | 97 | 45 | 46 |
| | Crosswalk (C-D-A) | 40 | 43 | 250 | 187 | 108 | 149 | 662 | 766 | 34 | 56 | 134 | 252 | 4 | 11 | 21 | 19 | 55 | 23 | 138 | 136 |
| *Tenth Ave & W. 31st St* | Sidewalk A | 0 | 38 | 590 | 203 | 0 | 0 | 759 | 802 | 0 | 0 | 192 | 569 | 0 | 0 | 125 | 948 | 0 | 0 | 1082 | 279 |
| | Sidewalk B | 107 | 71 | 101 | 432 | 200 | 257 | 236 | 250 | 64 | 140 | 472 | 127 | 6 | 621 | 37 | 1760 | 654 | 37 | 2306 | 65 |
| | Sidewalk C | 45 | 69 | 128 | 74 | 117 | 133 | 189 | 277 | 70 | 50 | 62 | 170 | 6 | 26 | 13 | 12 | 30 | 26 | 57 | 51 |
| | Sidewalk D | 211 | 157 | 0 | 0 | 657 | 712 | 0 | 0 | 128 | 198 | 0 | 0 | 28 | 1068 | 0 | 0 | 1190 | 111 | 0 | 0 |
| | Corner A & B | 0 | 0 | 8 | 11 | 0 | 0 | 24 | 16 | 0 | 0 | 4 | 12 | 0 | 0 | 0 | 2 | 0 | 0 | 4 | 9 |
| | Corner C & D | 2 | 3 | 0 | 0 | 2 | 10 | 0 | 0 | 3 | 12 | 0 | 0 | 1 | 1 | 0 | 0 | 0 | 1 | 0 | 0 |
| | Crosswalk (A-B-C) | 87 | 419 | 126 | 80 | 259 | 264 | 212 | 290 | 460 | 99 | 58 | 163 | 28 | 1780 | 13 | 600 | 1903 | 52 | 666 | 57 |
| | Crosswalk (C-D-A) | 31 | 57 | 8 | 1 | 91 | 98 | 6 | 8 | 61 | 39 | 16 | 16 | 6 | 614 | 3 | 4 | 627 | 17 | 3 | 3 |
| *Tenth Ave & W. 33rd St* | Sidewalk A | 161 | 562 | 547 | 405 | 426 | 441 | 737 | 777 | 615 | 219 | 293 | 533 | 34 | 160 | 35 | 46 | 272 | 83 | 203 | 190 |
| | Sidewalk B | 227 | 166 | 140 | 618 | 464 | 388 | 256 | 291 | 525 | 207 | 639 | 196 | 30 | 95 | 24 | 433 | 220 | 113 | 477 | 74 |
| | Sidewalk C | 435 | 1069 | 130 | 130 | 526 | 608 | 239 | 280 | 1216 | 521 | 159 | 153 | 96 | 2381 | 16 | 625 | 2670 | 198 | 660 | 53 |
| | Sidewalk D | 252 | 454 | 422 | 698 | 825 | 839 | 614 | 615 | 675 | 244 | 874 | 445 | 491 | 499 | 61 | 1917 | 675 | 609 | 2162 | 175 |
| | Corner A & B | 0 | 2 | 26 | 9 | 12 | 12 | 22 | 11 | 6 | 2 | 22 | 31 | 0 | 2 | 1 | 2 | 15 | 2 | 7 | 10 |
| | Corner C & D | 7 | 19 | 9 | 3 | 4 | 11 | 36 | 28 | 22 | 19 | 4 | 8 | 2 | 583 | 444 | 0 | 604 | 2 | 2 | 458 |
| | Crosswalk (A-B-C) | 186 | 738 | 352 | 231 | 421 | 396 | 420 | 392 | 972 | 218 | 362 | 363 | 41 | 401 | 34 | 143 | 500 | 84 | 208 | 114 |
| | Crosswalk (C-D-A) | 451 | 924 | 449 | 411 | 624 | 638 | 952 | 975 | 1194 | 517 | 563 | 433 | 82 | 1869 | 32 | 129 | 2142 | 186 | 290 | 196 |
| *Tenth Ave & W. 34th St* | Sidewalk A | 143 | 616 | 489 | 229 | 662 | 681 | 686 | 716 | 701 | 145 | 196 | 569 | 37 | 55 | 27 | 40 | 159 | 125 | 172 | 158 |
| | Sidewalk B | 181 | 177 | 80 | 488 | 406 | 430 | 366 | 387 | 154 | 223 | 498 | 129 | 28 | 49 | 39 | 179 | 145 | 136 | 218 | 110 |
| | Sidewalk C | 116 | 820 | 235 | 228 | 537 | 622 | 459 | 450 | 675 | 179 | 288 | 227 | 64 | 377 | 30 | 97 | 425 | 106 | 211 | 114 |
| | Sidewalk D | 338 | 618 | 90 | 402 | 951 | 981 | 677 | 649 | 718 | 311 | 546 | 111 | 40 | 100 | 90 | 314 | 257 | 185 | 336 | 78 |
| | Corner A & B | 62 | 5 | 21 | 19 | 25 | 11 | 23 | 15 | 14 | 2 | 32 | 17 | 3 | 12 | 7 | 7 | 23 | 1 | 20 | 11 |
| | Corner C & D | 26 | 27 | 32 | 7 | 68 | 57 | 19 | 24 | 133 | 33 | 11 | 36 | 10 | 69 | 1 | 2 | 90 | 9 | 3 | 7 |
| | Crosswalk (A-B-C) | 106 | 573 | 255 | 194 | 541 | 495 | 451 | 531 | 769 | 136 | 147 | 474 | 40 | 136 | 24 | 80 | 233 | 115 | 138 | 143 |
| | Crosswalk (C-D-A) | 127 | 751 | 438 | 491 | 816 | 731 | 1000 | 1097 | 1270 | 152 | 261 | 537 | 108 | 365 | 24 | 59 | 431 | 101 | 195 | 201 |
| *Tenth Ave & W. 35th St* | Sidewalk A | 85 | 430 | 325 | 216 | 420 | 422 | 611 | 623 | 400 | 86 | 179 | 307 | | | | | | | | |
| | Sidewalk B | 158 | 170 | 63 | 444 | 381 | 382 | 268 | 309 | 167 | 159 | 328 | 90 | | | | | | | | |
| | Sidewalk C | 69 | 381 | 176 | 150 | 283 | 327 | 386 | 389 | 286 | 99 | 149 | 221 | | | | | | | | |
| | Sidewalk D | 344 | 405 | 41 | 226 | 845 | 856 | 192 | 227 | 345 | 353 | 187 | 88 | | | | | | | | |
| | Corner A & B | 2 | 7 | 12 | 14 | 28 | 21 | 17 | 14 | 7 | 2 | 23 | 13 | | | | | | | | |
| | Corner C & D | 8 | 7 | 12 | 1 | 8 | 8 | 10 | 16 | 6 | 6 | 3 | 24 | | | | | | | | |
| | Crosswalk (A-B-C) | 78 | 493 | 175 | 162 | 348 | 377 | 388 | 392 | 382 | 98 | 157 | 190 | | | | | | | | |
| | Crosswalk (C-D-A) | 78 | 404 | 353 | 280 | 350 | 397 | 742 | 770 | 359 | 118 | 227 | 384 | | | | | | | | |

# Appendix S.5.2

**PEDESTRIAN VOLUMES (SIDEWALKS, CORNERS, AND CROSSWALKS)**
**2025 FUTURE WITH THE PROPOSED ACTION**

| Intersection | Elements | Weekday AM Peak 15-Min. | | | | Weekday MD Peak 15-Min. | | | | Weekday PM Peak 15-Min. | | | | Special Events Evening Peak 15-Min. | | | | Special Events Sunday Peak 15-Min. | | | |
|---|---|---|---|---|---|---|---|---|---|---|---|---|---|---|---|---|---|---|---|---|---|
| ***Tenth Ave & W. 36th St*** | Sidewalk A | 73 | 122 | 203 | 212 | 138 | 151 | 542 | 547 | 123 | 84 | 181 | 152 | | | | | | | | |
| | Sidewalk B | 158 | 151 | 85 | 171 | 376 | 386 | 179 | 184 | 140 | 139 | 190 | 102 | | | | | | | | |
| | Sidewalk C | 45 | 96 | 168 | 155 | 197 | 213 | 327 | 329 | 87 | 55 | 139 | 142 | | | | | | | | |
| | Sidewalk D | 211 | 267 | 34 | 78 | 661 | 656 | 155 | 171 | 242 | 169 | 101 | 61 | | | | | | | | |
| | Corner A & B | 3 | 8 | 13 | 12 | 4 | 11 | 24 | 16 | 8 | 2 | 9 | 10 | | | | | | | | |
| | Corner C & D | 9 | 10 | 3 | 0 | 11 | 13 | 3 | 0 | 8 | 8 | 0 | 8 | | | | | | | | |
| | Crosswalk (A-B-C) | 94 | 166 | 222 | 181 | 206 | 214 | 348 | 339 | 192 | 113 | 150 | 134 | | | | | | | | |
| | Crosswalk (C-D-A) | 78 | 174 | 245 | 276 | 244 | 259 | 602 | 606 | 203 | 74 | 229 | 198 | | | | | | | | |
| ***Tenth Ave & W. 37th St*** | Sidewalk A | 126 | 174 | 199 | 188 | 305 | 310 | 388 | 394 | 146 | 103 | 160 | 137 | | | | | | | | |
| | Sidewalk B | 196 | 179 | 114 | 164 | 381 | 372 | 255 | 266 | 151 | 161 | 137 | 95 | | | | | | | | |
| | Sidewalk C | 65 | 143 | 155 | 152 | 134 | 153 | 324 | 333 | 113 | 58 | 123 | 126 | | | | | | | | |
| | Sidewalk D | 212 | 217 | 25 | 74 | 510 | 506 | 55 | 60 | 185 | 157 | 83 | 34 | | | | | | | | |
| | Corner A & B | 4 | 5 | 23 | 21 | 12 | 12 | 31 | 27 | 9 | 5 | 20 | 24 | | | | | | | | |
| | Corner C & D | 19 | 19 | 4 | 1 | 19 | 17 | 2 | 2 | 7 | 9 | 3 | 6 | | | | | | | | |
| | Crosswalk (A-B-C) | 153 | 204 | 150 | 163 | 330 | 331 | 339 | 334 | 191 | 127 | 121 | 118 | | | | | | | | |
| | Crosswalk (C-D-A) | 79 | 309 | 236 | 215 | 154 | 154 | 469 | 471 | 296 | 86 | 169 | 152 | | | | | | | | |
| ***Tenth Ave & W. 38th St*** | Sidewalk A | 98 | 195 | 196 | 255 | 285 | 309 | 313 | 320 | 174 | 97 | 206 | 163 | | | | | | | | |
| | Sidewalk B | 148 | 170 | 67 | 149 | 317 | 299 | 205 | 225 | 154 | 126 | 110 | 72 | | | | | | | | |
| | Sidewalk C | 53 | 100 | 186 | 158 | 152 | 164 | 325 | 329 | 100 | 60 | 143 | 174 | | | | | | | | |
| | Sidewalk D | 192 | 227 | 40 | 133 | 356 | 347 | 159 | 162 | 175 | 140 | 150 | 44 | | | | | | | | |
| | Corner A & B | 6 | 29 | 3 | 5 | 18 | 23 | 14 | 15 | 25 | 6 | 1 | 3 | | | | | | | | |
| | Corner C & D | 21 | 21 | 2 | 0 | 25 | 26 | 2 | 3 | 15 | 16 | 2 | 4 | | | | | | | | |
| | Crosswalk (A-B-C) | 108 | 206 | 138 | 141 | 276 | 306 | 313 | 305 | 160 | 101 | 139 | 127 | | | | | | | | |
| | Crosswalk (C-D-A) | 69 | 138 | 190 | 263 | 193 | 193 | 362 | 357 | 160 | 65 | 198 | 154 | | | | | | | | |
| ***Tenth Ave & W. 39th St*** | Sidewalk A | 25 | 208 | 155 | 323 | 54 | 62 | 249 | 255 | 205 | 46 | 277 | 144 | | | | | | | | |
| | Sidewalk B | 181 | 327 | 23 | 65 | 333 | 321 | 59 | 68 | 325 | 166 | 67 | 41 | | | | | | | | |
| | Sidewalk C | 61 | 120 | 141 | 156 | 163 | 165 | 259 | 249 | 119 | 69 | 158 | 115 | | | | | | | | |
| | Sidewalk D | 205 | 265 | 39 | 187 | 293 | 289 | 171 | 176 | 222 | 177 | 190 | 59 | | | | | | | | |
| | Corner A & B | 6 | 81 | 2 | 1 | 7 | 7 | 5 | 4 | 77 | 8 | 1 | 2 | | | | | | | | |
| | Corner C & D | 23 | 15 | 0 | 0 | 17 | 17 | 2 | 0 | 10 | 14 | 1 | 0 | | | | | | | | |
| | Crosswalk (A-B-C) | 46 | 154 | 160 | 233 | 76 | 83 | 307 | 297 | 156 | 62 | 243 | 139 | | | | | | | | |
| | Crosswalk (C-D-A) | 74 | 195 | 177 | 268 | 189 | 194 | 271 | 275 | 202 | 88 | 234 | 163 | | | | | | | | |
| ***Tenth Ave & W. 40th St*** | Sidewalk A | 56 | 58 | 216 | 338 | 122 | 152 | 288 | 288 | 36 | 78 | 303 | 197 | | | | | | | | |
| | Sidewalk B | 316 | 392 | 59 | 169 | 463 | 452 | 143 | 167 | 380 | 309 | 165 | 80 | | | | | | | | |
| | Sidewalk C | 11 | 37 | 182 | 341 | 36 | 56 | 323 | 315 | 27 | 23 | 330 | 172 | | | | | | | | |
| | Sidewalk D | 153 | 321 | 4 | 8 | 235 | 239 | 10 | 8 | 293 | 145 | 7 | 5 | | | | | | | | |
| | Corner A & B | 31 | 31 | 109 | 14 | 40 | 37 | 74 | 75 | 24 | 26 | 19 | 123 | | | | | | | | |
| | Corner C & D | 4 | 2 | 1 | 0 | 16 | 18 | 2 | 4 | 3 | 5 | 1 | 0 | | | | | | | | |
| | Crosswalk (A-B-C) | 78 | 117 | 192 | 332 | 161 | 191 | 319 | 295 | 92 | 90 | 328 | 175 | | | | | | | | |
| | Crosswalk (C-D-A) | 17 | 27 | 156 | 314 | 30 | 41 | 235 | 230 | 21 | 21 | 296 | 145 | | | | | | | | |
| ***Tenth Ave & W. 41st St*** | Sidewalk A | 65 | 29 | 128 | 204 | 77 | 73 | 191 | 212 | 47 | 52 | 141 | 115 | | | | | | | | |
| | Sidewalk B | 163 | 230 | 74 | 34 | 381 | 343 | 112 | 102 | 297 | 134 | 63 | 57 | | | | | | | | |
| | Sidewalk C | 52 | 71 | 494 | 1017 | 108 | 138 | 601 | 581 | 45 | 71 | 979 | 491 | | | | | | | | |
| | Sidewalk D | 231 | 355 | 66 | 231 | 274 | 279 | 113 | 185 | 329 | 216 | 163 | 189 | | | | | | | | |
| | Corner A & B | 3 | 4 | 7 | 11 | 2 | 7 | 31 | 29 | 3 | 4 | 14 | 11 | | | | | | | | |
| | Corner C & D | 22 | 34 | 26 | 25 | 57 | 59 | 28 | 28 | 23 | 20 | 20 | 21 | | | | | | | | |
| | Crosswalk (A-B-C) | 116 | 43 | 128 | 227 | 132 | 111 | 345 | 311 | 77 | 70 | 274 | 96 | | | | | | | | |
| | Crosswalk (C-D-A) | 159 | 387 | 138 | 200 | 206 | 263 | 215 | 225 | 326 | 268 | 159 | 130 | | | | | | | | |
| ***Tenth Ave & W. 42nd St*** | Sidewalk A | 184 | 72 | 69 | 84 | 206 | 103 | 149 | 155 | 256 | 154 | 85 | 86 | | | | | | | | |
| | Sidewalk B | 90 | 118 | 210 | 147 | 253 | 244 | 220 | 187 | 104 | 127 | 226 | 214 | | | | | | | | |
| | Sidewalk C | 382 | 502 | 118 | 180 | 357 | 510 | 260 | 221 | 435 | 603 | 256 | 90 | | | | | | | | |
| | Sidewalk D | 136 | 185 | 259 | 270 | 174 | 187 | 267 | 426 | 129 | 120 | 185 | 503 | | | | | | | | |
| | Corner A & B | 10 | 6 | 14 | 12 | 7 | 3 | 35 | 22 | 13 | 8 | 29 | 32 | | | | | | | | |
| | Corner C & D | 30 | 28 | 20 | 26 | 46 | 18 | 17 | 17 | 128 | 80 | 22 | 14 | | | | | | | | |
| | Crosswalk (A-B-C) | 227 | 101 | 114 | 194 | 234 | 153 | 264 | 293 | 228 | 190 | 137 | 145 | | | | | | | | |
| | Crosswalk (C-D-A) | 285 | 267 | 91 | 170 | 293 | 429 | 157 | 201 | 203 | 505 | 105 | 111 | | | | | | | | |
| ***Dyer Ave & W. 42nd St*** | Sidewalk A | 99 | 119 | 0 | 0 | 71 | 90 | 0 | 0 | 179 | 120 | 0 | 0 | | | | | | | | |
| | Sidewalk B | 0 | 0 | 122 | 116 | 0 | 0 | 87 | 97 | 0 | 0 | 185 | 164 | | | | | | | | |
| | Sidewalk C | 146 | 247 | 3 | 6 | 178 | 284 | 1 | 2 | 207 | 240 | 12 | 6 | | | | | | | | |
| | Sidewalk D | 1 | 0 | 157 | 224 | 1 | 4 | 178 | 275 | 3 | 1 | 212 | 224 | | | | | | | | |
| | Corner A & B | 0 | 0 | 0 | 0 | 0 | 0 | 0 | 0 | 0 | 0 | 0 | 0 | | | | | | | | |
| | Corner C & D | 3 | 0 | 0 | 0 | 0 | 1 | 0 | 0 | 0 | 4 | 0 | 0 | | | | | | | | |
| | Crosswalk (A-B-C) | 106 | 71 | 4 | 6 | 78 | 59 | 1 | 6 | 158 | 132 | 4 | 8 | | | | | | | | |
| | Crosswalk (C-D-A) | 152 | 232 | 6 | 2 | 179 | 275 | 3 | 2 | 212 | 257 | 10 | 11 | | | | | | | | |
| ***Ninth Ave & W. 30th St*** | Sidewalk A | 92 | 95 | 261 | 55 | 303 | 346 | 293 | 320 | 81 | 87 | 71 | 106 | 15 | 28 | 99 | 14 | 128 | 96 | 431 | 71 |
| | Sidewalk B | 195 | 93 | 42 | 53 | 433 | 467 | 52 | 87 | 129 | 169 | 39 | 62 | 67 | 47 | 7 | 50 | 287 | 150 | 52 | 110 |
| | Sidewalk C | 63 | 50 | 129 | 120 | 70 | 76 | 412 | 421 | 43 | 73 | 118 | 139 | 10 | 25 | 48 | 36 | 89 | 148 | 230 | 121 |
| | Sidewalk D | 135 | 108 | 288 | 51 | 401 | 399 | 101 | 109 | 109 | 105 | 43 | 116 | 67 | 13 | 25 | 12 | 180 | 134 | 156 | 23 |
| | Corner A & B | 8 | 0 | 3 | 14 | 4 | 3 | 11 | 14 | 4 | 5 | 9 | 12 | 7 | 0 | 7 | 6 | 3 | 15 | 45 | 18 |
| | Corner C & D | 18 | 9 | 8 | 22 | 3 | 10 | 12 | 2 | 4 | 6 | 22 | 4 | 2 | 3 | 2 | 2 | 1 | 20 | 79 | 51 |
| | Crosswalk (A-B-C) | 110 | 78 | 161 | 105 | 213 | 258 | 415 | 460 | 69 | 77 | 123 | 165 | 11 | 46 | 46 | 38 | 105 | 152 | 255 | 123 |
| | Crosswalk (C-D-A) | 106 | 35 | 303 | 97 | 79 | 91 | 395 | 404 | 39 | 78 | 83 | 121 | 11 | 18 | 79 | 13 | 106 | 122 | 320 | 105 |
| ***Ninth Ave & W. 31st St*** | Sidewalk A | 114 | 498 | 194 | 319 | 298 | 311 | 291 | 304 | 558 | 131 | 284 | 185 | 34 | 678 | 131 | 523 | 692 | 402 | 652 | 238 |
| | Sidewalk B | 119 | 226 | 147 | 197 | 201 | 209 | 576 | 688 | 235 | 98 | 317 | 153 | 19 | 27 | 42 | 2113 | 141 | 36 | 2077 | 594 |
| | Sidewalk C | 115 | 176 | 223 | 112 | 96 | 109 | 452 | 509 | 131 | 67 | 182 | 177 | 19 | 63 | 63 | 41 | 30 | 70 | 253 | 135 |
| | Sidewalk D | 95 | 79 | 70 | 137 | 404 | 425 | 176 | 161 | 85 | 105 | 122 | 46 | 82 | 30 | 11 | 24 | 435 | 91 | 28 | 29 |
| | Corner A & B | 37 | 219 | 9 | 34 | 43 | 42 | 10 | 6 | 274 | 168 | 44 | 127 | 34 | 63 | 0 | 1 | 80 | 88 | 13 | 67 |
| | Corner C & D | 49 | 50 | 15 | 18 | 10 | 2 | 73 | 77 | 36 | 123 | 25 | 84 | 8 | 10 | 1 | 1 | 2 | 3 | 8 | 9 |
| | Crosswalk (A-B-C) | 90 | 319 | 125 | 138 | 348 | 374 | 482 | 553 | 412 | 108 | 125 | 150 | 33 | 2131 | 51 | 37 | 1961 | 503 | 276 | 143 |
| | Crosswalk (C-D-A) | 101 | 142 | 125 | 81 | 180 | 212 | 339 | 357 | 116 | 69 | 73 | 98 | 13 | 53 | 105 | 28 | 58 | 145 | 488 | 66 |
| ***Ninth Ave & W. 33rd St*** | Sidewalk A | 131 | 633 | 198 | 438 | 233 | 300 | 516 | 603 | 633 | 192 | 271 | 196 | 72 | 183 | 41 | 709 | 452 | 82 | 154 | 735 |
| | Sidewalk B | 191 | 256 | 91 | 413 | 627 | 608 | 226 | 261 | 243 | 204 | 335 | 68 | 61 | 320 | 56 | 757 | 328 | 437 | 494 | 620 |
| | Sidewalk C | 430 | 717 | 610 | 164 | 719 | 771 | 317 | 361 | 607 | 584 | 97 | 680 | 140 | 2584 | 30 | 27 | 2609 | 653 | 91 | 59 |
| | Sidewalk D | 732 | 375 | 398 | 1519 | 446 | 459 | 644 | 675 | 386 | 754 | 1384 | 446 | 55 | 1020 | 139 | 3045 | 102 | 1293 | 2637 | 1055 |
| | Corner A & B | 5 | 53 | 18 | 63 | 12 | 29 | 32 | 61 | 151 | 107 | 139 | 88 | 8 | 12 | 11 | 10 | 9 | 12 | 41 | 48 |
| | Corner C & D | 14 | 8 | 481 | 30 | 13 | 36 | 56 | 61 | 72 | 176 | 113 | 594 | 2 | 2 | 0 | 1 | 4 | 4 | 0 | 2 |
| | Crosswalk (A-B-C) | 129 | 540 | 370 | 351 | 266 | 266 | 736 | 783 | 461 | 163 | 433 | 484 | 48 | 686 | 61 | 402 | 511 | 339 | 327 | 746 |
| | Crosswalk (C-D-A) | 372 | 1107 | 412 | 459 | 569 | 583 | 658 | 650 | 1154 | 459 | 353 | 429 | 119 | 2920 | 49 | 1225 | 2599 | 1059 | 248 | 1435 |

# Appendix S.5.2

**PEDESTRIAN VOLUMES (SIDEWALKS, CORNERS, AND CROSSWALKS)**
**2025 FUTURE WITH THE PROPOSED ACTION**

| Intersection | Elements | Weekday AM Peak 15-Min. | | | | Weekday MD Peak 15-Min. | | | | Weekday PM Peak 15-Min. | | | | Special Events Evening Peak 15-Min. | | | | Special Events Sunday Peak 15-Min. | | | |
|---|---|---|---|---|---|---|---|---|---|---|---|---|---|---|---|---|---|---|---|---|---|
| ***Ninth Ave & W. 34th St*** | Sidewalk A | 122 | 458 | 182 | 180 | 415 | 434 | 502 | 522 | 534 | 175 | 256 | 200 | 46 | 65 | 39 | 367 | 143 | 107 | 101 | 462 |
| | Sidewalk B | 169 | 184 | 111 | 456 | 548 | 491 | 314 | 243 | 244 | 231 | 784 | 150 | 43 | 103 | 77 | 673 | 179 | 208 | 339 | 379 |
| | Sidewalk C | 140 | 526 | 162 | 271 | 270 | 259 | 716 | 678 | 712 | 151 | 305 | 303 | 110 | 659 | 67 | 317 | 615 | 503 | 339 | 463 |
| | Sidewalk D | 211 | 284 | 130 | 962 | 566 | 725 | 575 | 646 | 319 | 249 | 784 | 189 | 43 | 944 | 72 | 377 | 208 | 959 | 470 | 129 |
| | Corner A & B | 161 | 216 | 149 | 207 | 101 | 109 | 22 | 14 | 101 | 186 | 83 | 177 | 1 | 7 | 26 | 16 | 4 | 7 | 12 | 11 |
| | Corner C & D | 142 | 254 | 445 | 139 | 73 | 87 | 266 | 220 | 91 | 152 | 95 | 183 | 25 | 159 | 52 | 9 | 141 | 194 | 34 | 23 |
| | Crosswalk (A-B-C) | 155 | 469 | 180 | 245 | 383 | 344 | 559 | 497 | 833 | 216 | 360 | 301 | 69 | 417 | 55 | 303 | 295 | 262 | 252 | 345 |
| | Crosswalk (C-D-A) | 181 | 705 | 190 | 208 | 400 | 434 | 451 | 447 | 716 | 197 | 368 | 191 | 61 | 635 | 38 | 569 | 515 | 432 | 131 | 576 |
| ***Ninth Ave & W. 37th St*** | Sidewalk A | 116 | 146 | 95 | 322 | 243 | 255 | 247 | 461 | 181 | 103 | 153 | 279 | | | | | | | | |
| | Sidewalk B | 144 | 187 | 63 | 156 | 378 | 376 | 110 | 192 | 216 | 170 | 131 | 134 | | | | | | | | |
| | Sidewalk C | 54 | 112 | 179 | 203 | 96 | 109 | 449 | 397 | 126 | 57 | 288 | 156 | | | | | | | | |
| | Sidewalk D | 96 | 314 | 62 | 129 | 304 | 488 | 129 | 120 | 106 | 295 | 157 | 62 | | | | | | | | |
| | Corner A & B | 19 | 86 | 9 | 7 | 28 | 91 | 16 | 14 | 28 | 78 | 7 | 7 | | | | | | | | |
| | Corner C & D | 16 | 16 | 11 | 4 | 18 | 16 | 5 | 6 | 8 | 11 | 2 | 10 | | | | | | | | |
| | Crosswalk (A-B-C) | 83 | 115 | 163 | 191 | 177 | 196 | 427 | 399 | 179 | 91 | 292 | 167 | | | | | | | | |
| | Crosswalk (C-D-A) | 54 | 108 | 106 | 321 | 119 | 106 | 289 | 497 | 146 | 57 | 143 | 285 | | | | | | | | |
| ***Ninth Ave & W. 38th St*** | Sidewalk A | 57 | 127 | 51 | 78 | 165 | 185 | 186 | 218 | 117 | 69 | 84 | 107 | | | | | | | | |
| | Sidewalk B | 127 | 269 | 22 | 58 | 266 | 309 | 51 | 61 | 159 | 159 | 72 | 86 | | | | | | | | |
| | Sidewalk C | 139 | 79 | 157 | 133 | 96 | 90 | 239 | 249 | 80 | 65 | 136 | 159 | | | | | | | | |
| | Sidewalk D | 93 | 75 | 56 | 92 | 222 | 205 | 129 | 151 | 102 | 118 | 95 | 55 | | | | | | | | |
| | Corner A & B | 4 | 35 | 1 | 9 | 18 | 23 | 7 | 12 | 17 | 9 | 10 | 10 | | | | | | | | |
| | Corner C & D | 8 | 11 | 3 | 3 | 18 | 16 | 1 | 7 | 8 | 9 | 4 | 7 | | | | | | | | |
| | Crosswalk (A-B-C) | 53 | 79 | 178 | 256 | 103 | 106 | 305 | 332 | 97 | 69 | 210 | 166 | | | | | | | | |
| | Crosswalk (C-D-A) | 54 | 92 | 90 | 69 | 97 | 110 | 216 | 230 | 103 | 76 | 99 | 77 | | | | | | | | |
| ***Ninth Ave & W. 39th St*** | Sidewalk A | 31 | 84 | 75 | 111 | 56 | 73 | 168 | 170 | 82 | 49 | 169 | 88 | | | | | | | | |
| | Sidewalk B | 146 | 407 | 22 | 37 | 318 | 346 | 59 | 86 | 345 | 194 | 56 | 53 | | | | | | | | |
| | Sidewalk C | 57 | 59 | 116 | 294 | 87 | 93 | 286 | 294 | 80 | 76 | 306 | 172 | | | | | | | | |
| | Sidewalk D | 61 | 69 | 60 | 104 | 162 | 132 | 139 | 143 | 117 | 80 | 109 | 72 | | | | | | | | |
| | Corner A & B | 5 | 16 | 8 | 6 | 9 | 5 | 8 | 10 | 40 | 4 | 7 | 4 | | | | | | | | |
| | Corner C & D | 12 | 3 | 0 | 2 | 12 | 25 | 0 | 1 | 0 | 10 | 2 | 4 | | | | | | | | |
| | Crosswalk (A-B-C) | 27 | 74 | 133 | 346 | 56 | 74 | 330 | 330 | 83 | 68 | 336 | 199 | | | | | | | | |
| | Crosswalk (C-D-A) | 57 | 92 | 63 | 97 | 134 | 121 | 147 | 141 | 108 | 82 | 145 | 68 | | | | | | | | |
| ***Ninth Ave & W. 42nd St*** | Sidewalk A | 229 | 120 | 122 | 120 | 232 | 187 | 283 | 231 | 340 | 196 | 227 | 179 | | | | | | | | |
| | Sidewalk B | 139 | 158 | 253 | 256 | 239 | 231 | 270 | 252 | 219 | 207 | 410 | 303 | | | | | | | | |
| | Sidewalk C | 275 | 233 | 184 | 196 | 285 | 402 | 251 | 212 | 283 | 368 | 247 | 193 | | | | | | | | |
| | Sidewalk D | 73 | 72 | 265 | 256 | 180 | 203 | 292 | 363 | 125 | 124 | 282 | 323 | | | | | | | | |
| | Corner A & B | 16 | 19 | 12 | 21 | 26 | 34 | 24 | 31 | 19 | 41 | 22 | 41 | | | | | | | | |
| | Corner C & D | 37 | 12 | 9 | 10 | 36 | 37 | 11 | 18 | 32 | 27 | 15 | 9 | | | | | | | | |
| | Crosswalk (A-B-C) | 257 | 163 | 158 | 252 | 259 | 236 | 254 | 273 | 393 | 279 | 249 | 305 | | | | | | | | |
| | Crosswalk (C-D-A) | 248 | 229 | 149 | 171 | 289 | 390 | 245 | 237 | 277 | 339 | 257 | 243 | | | | | | | | |
| ***Eighth Ave & W. 30th St*** | Sidewalk A | 66 | 38 | 174 | 143 | 60 | 81 | 283 | 349 | 47 | 73 | 188 | 222 | 20 | 68 | 81 | 70 | 89 | 132 | 169 | 158 |
| | Sidewalk B | 302 | 343 | 50 | 67 | 408 | 464 | 98 | 138 | 336 | 394 | 119 | 119 | 182 | 144 | 30 | 63 | 188 | 182 | 44 | 38 |
| | Sidewalk C | 57 | 42 | 185 | 178 | 78 | 99 | 279 | 239 | 40 | 52 | 253 | 244 | 12 | 30 | 115 | 40 | 19 | 14 | 261 | 110 |
| | Sidewalk D | 134 | 126 | 58 | 30 | 222 | 261 | 54 | 67 | 159 | 169 | 41 | 82 | 88 | 62 | 23 | 41 | 108 | 86 | 40 | 164 |
| | Corner A & B | 32 | 15 | 84 | 24 | 21 | 23 | 63 | 65 | 11 | 31 | 57 | 105 | 10 | 21 | 21 | 44 | 33 | 27 | 24 | 14 |
| | Corner C & D | 13 | 9 | 0 | 12 | 17 | 16 | 11 | 11 | 6 | 10 | 0 | 3 | 6 | 1 | 4 | 2 | 1 | 8 | 17 | 10 |
| | Crosswalk (A-B-C) | 34 | 74 | 202 | 201 | 66 | 89 | 315 | 319 | 51 | 66 | 266 | 279 | 12 | 50 | 91 | 45 | 53 | 105 | 195 | 117 |
| | Crosswalk (C-D-A) | 45 | 33 | 139 | 117 | 55 | 85 | 186 | 210 | 38 | 57 | 162 | 196 | 20 | 24 | 71 | 52 | 24 | 92 | 115 | 93 |
| ***Eighth Ave & W. 31st St*** | Sidewalk A | 202 | 226 | 93 | 178 | 427 | 305 | 107 | 240 | 353 | 107 | 125 | 242 | 90 | 198 | 74 | 110 | 259 | 212 | 99 | 137 |
| | Sidewalk B | 187 | 171 | 284 | 388 | 275 | 249 | 500 | 389 | 202 | 253 | 416 | 257 | 88 | 73 | 136 | 797 | 224 | 230 | 880 | 264 |
| | Sidewalk C | 30 | 75 | 252 | 170 | 83 | 93 | 419 | 336 | 79 | 54 | 228 | 238 | 2 | 77 | 169 | 106 | 37 | 125 | 173 | 157 |
| | Sidewalk D | 146 | 112 | 50 | 160 | 252 | 223 | 133 | 116 | 128 | 180 | 97 | 100 | 138 | 139 | 77 | 108 | 126 | 124 | 28 | 69 |
| | Corner A & B | 20 | 41 | 22 | 18 | 30 | 47 | 32 | 28 | 29 | 23 | 33 | 23 | 21 | 11 | 39 | 84 | 9 | 11 | 37 | 33 |
| | Corner C & D | 12 | 8 | 30 | 15 | 7 | 7 | 31 | 36 | 7 | 7 | 22 | 27 | 1 | 3 | 44 | 58 | 7 | 10 | 5 | 5 |
| | Crosswalk (A-B-C) | 176 | 277 | 353 | 331 | 406 | 296 | 432 | 489 | 406 | 137 | 252 | 421 | 114 | 1435 | 176 | 96 | 1331 | 362 | 258 | 146 |
| | Crosswalk (C-D-A) | 88 | 129 | 133 | 131 | 142 | 199 | 250 | 267 | 108 | 149 | 193 | 159 | 37 | 81 | 74 | 67 | 74 | 114 | 131 | 113 |
| ***Eighth Ave & W. 33rd St*** | Sidewalk A | 241 | 588 | 488 | 498 | 322 | 267 | 758 | 511 | 414 | 220 | 831 | 512 | 79 | 288 | 255 | 212 | 328 | 179 | 407 | 298 |
| | Sidewalk B | 330 | 433 | 255 | 373 | 591 | 470 | 257 | 207 | 821 | 223 | 369 | 227 | 114 | 416 | 123 | 385 | 514 | 418 | 264 | 271 |
| | Sidewalk C | 455 | 491 | 438 | 344 | 747 | 703 | 490 | 432 | 561 | 716 | 488 | 573 | 150 | 702 | 189 | 271 | 641 | 369 | 204 | 199 |
| | Sidewalk D | 213 | 202 | 392 | 529 | 340 | 261 | 891 | 697 | 332 | 145 | 999 | 417 | 149 | 84 | 255 | 2063 | 171 | 93 | 2146 | 580 |
| | Corner A & B | 26 | 37 | 31 | 17 | 55 | 31 | 74 | 58 | 88 | 46 | 55 | 60 | 15 | 46 | 34 | 30 | 42 | 57 | 49 | 42 |
| | Corner C & D | 32 | 24 | 25 | 31 | 74 | 86 | 70 | 78 | 42 | 86 | 59 | 72 | 25 | 28 | 44 | 28 | 131 | 67 | 17 | 23 |
| | Crosswalk (A-B-C) | 381 | 433 | 498 | 495 | 352 | 364 | 809 | 735 | 762 | 305 | 1210 | 370 | 133 | 538 | 159 | 342 | 423 | 314 | 310 | 405 |
| | Crosswalk (C-D-A) | 553 | 488 | 860 | 464 | 665 | 507 | 662 | 450 | 760 | 414 | 872 | 456 | 276 | 1566 | 405 | 239 | 1587 | 487 | 366 | 241 |
| ***Eighth Ave & W. 34th St*** | Sidewalk A | 445 | 408 | 244 | 259 | 454 | 223 | 344 | 329 | 920 | 284 | 409 | 444 | 242 | 157 | 67 | 70 | 415 | 220 | 226 | 210 |
| | Sidewalk B | 256 | 248 | 164 | 264 | 353 | 325 | 311 | 316 | 324 | 200 | 281 | 309 | 132 | 178 | 193 | 466 | 322 | 309 | 486 | 422 |
| | Sidewalk C | 132 | 279 | 388 | 315 | 209 | 211 | 497 | 408 | 344 | 175 | 622 | 271 | 181 | 680 | 63 | 222 | 758 | 384 | 371 | 372 |
| | Sidewalk D | 334 | 259 | 150 | 440 | 475 | 346 | 192 | 137 | 496 | 437 | 559 | 132 | 224 | 197 | 56 | 642 | 406 | 238 | 687 | 457 |
| | Corner A & B | 48 | 44 | 53 | 52 | 53 | 39 | 62 | 62 | 111 | 62 | 120 | 119 | 111 | 194 | 823 | 977 | 34 | 25 | 121 | 38 |
| | Corner C & D | 31 | 36 | 35 | 39 | 83 | 46 | 29 | 31 | 112 | 41 | 76 | 54 | 137 | 380 | 161 | 58 | 141 | 65 | 55 | 22 |
| | Crosswalk (A-B-C) | 295 | 411 | 349 | 390 | 534 | 411 | 603 | 533 | 791 | 370 | 640 | 520 | 175 | 296 | 194 | 368 | 455 | 281 | 290 | 256 |
| | Crosswalk (C-D-A) | 209 | 392 | 327 | 327 | 288 | 310 | 496 | 521 | 494 | 219 | 537 | 557 | 809 | 1475 | 110 | 172 | 810 | 350 | 258 | 313 |
| ***Eighth Ave & W. 37th St*** | Sidewalk A | 53 | 99 | 286 | 274 | 241 | 173 | 113 | 161 | 105 | 70 | 330 | 402 | | | | | | | | |
| | Sidewalk B | 174 | 330 | 120 | 56 | 255 | 287 | 86 | 94 | 459 | 406 | 46 | 130 | | | | | | | | |
| | Sidewalk C | 63 | 51 | 221 | 221 | 83 | 171 | 154 | 155 | 96 | 72 | 351 | 291 | | | | | | | | |
| | Sidewalk D | 258 | 269 | 67 | 96 | 258 | 147 | 201 | 116 | 467 | 461 | 141 | 116 | | | | | | | | |
| | Corner A & B | 18 | 42 | 71 | 36 | 35 | 32 | 25 | 23 | 52 | 22 | 19 | 16 | | | | | | | | |
| | Corner C & D | 25 | 31 | 30 | 28 | 34 | 27 | 31 | 30 | 79 | 26 | 94 | 34 | | | | | | | | |
| | Crosswalk (A-B-C) | 73 | 67 | 205 | 233 | 213 | 172 | 243 | 259 | 65 | 111 | 334 | 374 | | | | | | | | |
| | Crosswalk (C-D-A) | 66 | 119 | 306 | 266 | 198 | 234 | 348 | 255 | 114 | 148 | 490 | 418 | | | | | | | | |
| ***Eighth Ave & W. 38th St*** | Sidewalk A | 46 | 77 | 163 | 182 | 46 | 59 | 194 | 180 | 43 | 55 | 314 | 510 | | | | | | | | |
| | Sidewalk B | 98 | 275 | 145 | 42 | 77 | 183 | 43 | 26 | 185 | 350 | 59 | 93 | | | | | | | | |
| | Sidewalk C | 47 | 54 | 79 | 115 | 120 | 36 | 136 | 151 | 40 | 42 | 239 | 553 | | | | | | | | |
| | Sidewalk D | 144 | 213 | 111 | 68 | 168 | 188 | 114 | 118 | 202 | 499 | 59 | 102 | | | | | | | | |
| | Corner A & B | 27 | 93 | 85 | 28 | 210 | 166 | 172 | 132 | 14 | 24 | 12 | 17 | | | | | | | | |
| | Corner C & D | 29 | 35 | 13 | 15 | 161 | 117 | 120 | 90 | 17 | 17 | 14 | 20 | | | | | | | | |
| | Crosswalk (A-B-C) | 54 | 33 | 81 | 106 | 31 | 41 | 162 | 129 | 23 | 48 | 67 | 63 | | | | | | | | |
| | Crosswalk (C-D-A) | 64 | 58 | 175 | 187 | 89 | 105 | 149 | 126 | 85 | 70 | 68 | 254 | | | | | | | | |

# Appendix S.5.2

**PEDESTRIAN VOLUMES (SIDEWALKS, CORNERS, AND CROSSWALKS)**
**2025 FUTURE WITH THE PROPOSED ACTION**

| Intersection | Elements | Weekday AM Peak 15-Min. | | | | Weekday MD Peak 15-Min. | | | | Weekday PM Peak 15-Min. | | | | Special Events Evening Peak 15-Min. | | | | Special Events Sunday Peak 15-Min. | | | |
|---|---|---|---|---|---|---|---|---|---|---|---|---|---|---|---|---|---|---|---|---|---|
| *Eighth Ave & W. 39th St* | Sidewalk A | 44 | 80 | 133 | 520 | 131 | 93 | 345 | 483 | 129 | 45 | 722 | 484 | | | | | | | | |
| | Sidewalk B | 126 | 1372 | 239 | 61 | 324 | 532 | 157 | 206 | 998 | 389 | 42 | 148 | | | | | | | | |
| | Sidewalk C | 149 | 71 | 167 | 470 | 152 | 242 | 367 | 305 | 65 | 211 | 711 | 253 | | | | | | | | |
| | Sidewalk D | 248 | 626 | 135 | 76 | 513 | 401 | 181 | 129 | 913 | 401 | 108 | 115 | | | | | | | | |
| | Corner A & B | 1 | 14 | 58 | 23 | 31 | 46 | 35 | 39 | 17 | 27 | 10 | 94 | | | | | | | | |
| | Corner C & D | 40 | 21 | 21 | 61 | 39 | 73 | 29 | 33 | 13 | 22 | 15 | 21 | | | | | | | | |
| | Crosswalk (A-B-C) | 105 | 25 | 143 | 680 | 124 | 127 | 269 | 343 | 79 | 92 | 540 | 381 | | | | | | | | |
| | Crosswalk (C-D-A) | 88 | 102 | 249 | 477 | 113 | 757 | 448 | 400 | 101 | 187 | 1167 | 432 | | | | | | | | |
| *Eighth Ave & W. 42nd St* | Sidewalk A | 503 | 395 | 645 | 153 | 424 | 358 | 289 | 323 | 544 | 638 | 273 | 1530 | | | | | | | | |
| | Sidewalk B | 480 | 163 | 367 | 144 | 309 | 343 | 458 | 377 | 429 | 397 | 389 | 298 | | | | | | | | |
| | Sidewalk C | 1058 | 356 | 595 | 144 | 595 | 511 | 498 | 535 | 720 | 1296 | 472 | 765 | | | | | | | | |
| | Sidewalk D | 801 | 108 | 418 | 221 | 391 | 423 | 398 | 402 | 280 | 1639 | 530 | 584 | | | | | | | | |
| | Corner A & B | 46 | 47 | 60 | 47 | 5 | 47 | 75 | 110 | 28 | 176 | 99 | 192 | | | | | | | | |
| | Corner C & D | 8 | 241 | 54 | 41 | 26 | 117 | 106 | 89 | 41 | 75 | 95 | 99 | | | | | | | | |
| | Crosswalk (A-B-C) | 296 | 416 | 461 | 162 | 313 | 292 | 454 | 424 | 571 | 340 | 619 | 708 | | | | | | | | |
| | Crosswalk (C-D-A) | 1283 | 286 | 928 | 296 | 424 | 505 | 334 | 359 | 479 | 1234 | 296 | 1336 | | | | | | | | |
| *Seventh Ave & W. 31st St* | Sidewalk A | 193 | 325 | 142 | 552 | 386 | 344 | 380 | 428 | 551 | 243 | 469 | 386 | | | | | | | | |
| | Sidewalk B | 333 | 677 | 383 | 346 | 448 | 253 | 213 | 293 | 498 | 260 | 464 | 452 | | | | | | | | |
| | Sidewalk C | 176 | 140 | 166 | 392 | 171 | 157 | 289 | 253 | 258 | 367 | 360 | 402 | | | | | | | | |
| | Sidewalk D | 134 | 785 | 120 | 88 | 440 | 371 | 62 | 60 | 286 | 311 | 230 | 235 | | | | | | | | |
| | Corner A & B | 17 | 0 | 141 | 19 | 19 | 17 | 134 | 36 | 18 | 23 | 101 | 39 | | | | | | | | |
| | Corner C & D | 11 | 74 | 42 | 46 | 40 | 40 | 21 | 18 | 28 | 28 | 32 | 23 | | | | | | | | |
| | Crosswalk (A-B-C) | 467 | 412 | 145 | 333 | 372 | 309 | 292 | 371 | 600 | 434 | 324 | 311 | | | | | | | | |
| | Crosswalk (C-D-A) | 160 | 219 | 165 | 474 | 186 | 172 | 330 | 352 | 304 | 375 | 395 | 344 | | | | | | | | |
| *Seventh Ave & W. 33rd St* | Sidewalk A | 212 | 326 | 232 | 567 | 294 | 240 | 463 | 397 | 322 | 386 | 439 | 391 | | | | | | | | |
| | Sidewalk B | 316 | 455 | 309 | 259 | 403 | 538 | 283 | 220 | 302 | 466 | 439 | 367 | | | | | | | | |
| | Sidewalk C | 448 | 315 | 390 | 259 | 385 | 365 | 393 | 303 | 494 | 371 | 304 | 270 | | | | | | | | |
| | Sidewalk D | 605 | 274 | 288 | 671 | 385 | 354 | 573 | 503 | 347 | 473 | 693 | 511 | | | | | | | | |
| | Corner A & B | 48 | 72 | 37 | 62 | 32 | 48 | 67 | 101 | 54 | 21 | 35 | 80 | | | | | | | | |
| | Corner C & D | 28 | 68 | 67 | 40 | 51 | 68 | 46 | 46 | 57 | 28 | 33 | 57 | | | | | | | | |
| | Crosswalk (A-B-C) | 389 | 376 | 370 | 340 | 357 | 383 | 390 | 377 | 465 | 517 | 379 | 385 | | | | | | | | |
| | Crosswalk (C-D-A) | 543 | 621 | 364 | 572 | 524 | 521 | 527 | 504 | 608 | 547 | 538 | 484 | | | | | | | | |
| *Seventh Ave & W. 34th St* | Sidewalk A | 243 | 152 | 503 | 180 | 312 | 262 | 333 | 310 | 884 | 401 | 520 | 666 | | | | | | | | |
| | Sidewalk B | 632 | 89 | 196 | 258 | 250 | 224 | 366 | 284 | 297 | 833 | 954 | 170 | | | | | | | | |
| | Sidewalk C | 509 | 402 | 233 | 215 | 258 | 235 | 297 | 255 | 390 | 558 | 293 | 651 | | | | | | | | |
| | Sidewalk D | 220 | 343 | 1104 | 253 | 232 | 243 | 213 | 239 | 570 | 417 | 520 | 638 | | | | | | | | |
| | Corner A & B | 226 | 32 | 37 | 112 | 358 | 402 | 313 | 343 | 581 | 533 | 544 | 471 | | | | | | | | |
| | Corner C & D | 75 | 54 | 61 | 34 | 291 | 291 | 218 | 240 | 510 | 408 | 402 | 351 | | | | | | | | |
| | Crosswalk (A-B-C) | 576 | 199 | 319 | 179 | 442 | 424 | 304 | 318 | 176 | 158 | 123 | 119 | | | | | | | | |
| | Crosswalk (C-D-A) | 593 | 273 | 1009 | 303 | 277 | 276 | 353 | 357 | 259 | 155 | 152 | 177 | | | | | | | | |
| *Sixth Ave & W. 33rd St* | Sidewalk A | 214 | 102 | 224 | 167 | 168 | 96 | 364 | 311 | 246 | 313 | 672 | 532 | | | | | | | | |
| | Sidewalk B | 243 | 204 | 245 | 75 | 270 | 191 | 129 | 194 | 414 | 294 | 156 | 524 | | | | | | | | |
| | Sidewalk C | 328 | 120 | 316 | 191 | 235 | 272 | 273 | 274 | 294 | 515 | 279 | 472 | | | | | | | | |
| | Sidewalk D | 572 | 286 | 272 | 386 | 321 | 366 | 261 | 189 | 648 | 922 | 534 | 584 | | | | | | | | |
| | Corner A & B | 18 | 1 | 17 | 17 | 39 | 39 | 33 | 33 | 34 | 35 | 33 | 79 | | | | | | | | |
| | Corner C & D | 0 | 62 | 191 | 97 | 33 | 33 | 92 | 130 | 68 | 68 | 99 | 328 | | | | | | | | |
| | Crosswalk (A-B-C) | 346 | 166 | 178 | 225 | 320 | 327 | 323 | 248 | 343 | 565 | 479 | 382 | | | | | | | | |
| | Crosswalk (C-D-A) | 392 | 347 | 369 | 171 | 319 | 300 | 356 | 333 | 725 | 696 | 389 | 425 | | | | | | | | |
| *Sixth Ave & W. 34th St* | Sidewalk A | 14 | 30 | 3 | 4 | 28 | 51 | 9 | 8 | 37 | 48 | 6 | 6 | 0 | 0 | 0 | 0 | 0 | 0 | 0 | 0 |
| | Sidewalk B | 517 | 411 | 385 | 159 | 878 | 972 | 394 | 602 | 832 | 852 | 662 | 939 | 154 | 168 | 210 | 468 | 475 | 345 | 341 | 254 |
| | Sidewalk C | 441 | 112 | 417 | 386 | 304 | 339 | 867 | 914 | 624 | 550 | 515 | 582 | 236 | 289 | 249 | 188 | 437 | 368 | 229 | 195 |
| | Sidewalk D | 2 | 4 | 14 | 23 | 0 | 1 | 28 | 48 | 4 | 4 | 37 | 47 | 0 | 0 | 0 | 0 | 0 | 0 | 0 | 0 |
| | Corner A & B | 1 | 1 | 90 | 50 | 8 | 6 | 199 | 251 | 2 | 2 | 73 | 443 | 0 | 0 | 55 | 152 | 0 | 0 | 90 | 213 |
| | Corner C & D | 44 | 25 | 0 | 0 | 92 | 54 | 0 | 0 | 31 | 19 | 0 | 0 | 17 | 59 | 0 | 0 | 42 | 22 | 0 | 0 |
| | Crosswalk (A-B-C) | 172 | 469 | 465 | 312 | 868 | 706 | 618 | 762 | 953 | 573 | 387 | 776 | 250 | 140 | 185 | 212 | 329 | 461 | 407 | 348 |
| | Crosswalk (C-D-A) | 651 | 100 | 3 | 4 | 861 | 708 | 2 | 2 | 712 | 797 | 4 | 4 | 213 | 321 | 0 | 0 | 532 | 427 | 0 | 0 |
| *Broadway & W. 34th St* | Sidewalk A | 434 | 223 | 794 | 223 | 405 | 569 | 811 | 899 | 832 | 1347 | 826 | 1149 | 432 | 326 | 206 | 305 | 502 | 645 | 475 | 427 |
| | Sidewalk B | 16 | 15 | 15 | 30 | 67 | 65 | 28 | 51 | 13 | 14 | 38 | 48 | 0 | 0 | 0 | 0 | 0 | 0 | 0 | 0 |
| | Sidewalk C | 15 | 23 | 15 | 15 | 28 | 49 | 62 | 64 | 38 | 48 | 13 | 13 | 0 | 0 | 0 | 0 | 0 | 0 | 0 | 0 |
| | Sidewalk D | 612 | 391 | 563 | 199 | 983 | 916 | 724 | 446 | 1017 | 940 | 930 | 1035 | 336 | 297 | 429 | 574 | 611 | 551 | 644 | 628 |
| | Corner A & B | 254 | 52 | 0 | 0 | 141 | 185 | 0 | 0 | 118 | 475 | 0 | 0 | 42 | 79 | 0 | 0 | 114 | 174 | 0 | 0 |
| | Corner C & D | 0 | 0 | 51 | 253 | 0 | 0 | 282 | 396 | 0 | 0 | 557 | 535 | 0 | 0 | 133 | 119 | 0 | 0 | 194 | 59 |
| | Crosswalk (A-B-C) | 1151 | 219 | 15 | 15 | 1056 | 735 | 59 | 59 | 532 | 1191 | 12 | 12 | 370 | 183 | 0 | 0 | 359 | 445 | 0 | 0 |
| | Crosswalk (C-D-A) | 655 | 102 | 584 | 138 | 697 | 887 | 1001 | 1112 | 715 | 801 | 838 | 1132 | 214 | 322 | 283 | 161 | 317 | 320 | 298 | 284 |
| *Blvd & W. 33rd St* | Sidewalk A | 64 | 183 | 542 | 1746 | 225 | 255 | 643 | 674 | 207 | 88 | 1840 | 652 | 23 | 830 | 75 | 201 | 897 | 59 | 435 | 209 |
| | Sidewalk B | 170 | 168 | 502 | 480 | 401 | 423 | 350 | 399 | 173 | 188 | 445 | 568 | 9 | 115 | 31 | 726 | 180 | 84 | 973 | 81 |
| | Sidewalk C | 385 | 396 | 0 | 0 | 548 | 580 | 0 | 0 | 400 | 411 | 0 | 0 | 45 | 1910 | 0 | 0 | 2109 | 150 | 0 | 0 |
| | Sidewalk D | 0 | 0 | 47 | 215 | 0 | 0 | 218 | 229 | 0 | 0 | 231 | 73 | 0 | 0 | 7 | 1163 | 0 | 0 | 1529 | 30 |
| | Corner A & B | 6 | 4 | 59 | 56 | 43 | 43 | 93 | 92 | 3 | 4 | 64 | 64 | 0 | 58 | 2 | 2 | 215 | 3 | 11 | 12 |
| | Corner C & D | 0 | 0 | 0 | 0 | 0 | 0 | 0 | 0 | 0 | 0 | 0 | 0 | 0 | 0 | 0 | 0 | 0 | 0 | 0 | 0 |
| | Crosswalk (A-B-C) | 760 | 425 | 186 | 585 | 433 | 454 | 460 | 511 | 467 | 816 | 425 | 213 | 40 | 669 | 19 | 190 | 654 | 113 | 569 | 123 |
| | Crosswalk (C-D-A) | 101 | 118 | 280 | 1036 | 190 | 190 | 350 | 376 | 95 | 100 | 1104 | 370 | 10 | 5 | 35 | 302 | 389 | 48 | 371 | 117 |
| *Blvd & W. 34th St* | Sidewalk A | 79 | 203 | 770 | 343 | 438 | 428 | 517 | 514 | 274 | 93 | 356 | 826 | 7 | 186 | 25 | 284 | 269 | 72 | 318 | 123 |
| | Sidewalk B | 392 | 221 | 275 | 343 | 365 | 363 | 373 | 399 | 236 | 435 | 328 | 320 | 15 | 222 | 17 | 103 | 322 | 88 | 181 | 97 |
| | Sidewalk C | 56 | 319 | 180 | 618 | 421 | 418 | 388 | 411 | 445 | 82 | 555 | 209 | 51 | 295 | 16 | 117 | 318 | 62 | 195 | 87 |
| | Sidewalk D | 229 | 228 | 47 | 426 | 396 | 390 | 286 | 335 | 216 | 218 | 423 | 154 | 49 | 171 | 10 | 679 | 319 | 84 | 636 | 102 |
| | Corner A & B | 6 | 2 | 6 | 4 | 15 | 6 | 12 | 15 | 10 | 2 | 6 | 22 | 0 | 127 | 0 | 1 | 111 | 3 | 4 | 7 |
| | Corner C & D | 0 | 0 | 4 | 3 | 0 | 0 | 11 | 11 | 0 | 0 | 3 | 2 | 0 | 46 | 0 | 2 | 48 | 0 | 3 | 5 |
| | Crosswalk (A-B-C) | 282 | 299 | 230 | 305 | 447 | 442 | 467 | 493 | 367 | 316 | 211 | 254 | 20 | 183 | 12 | 140 | 288 | 88 | 217 | 92 |
| | Crosswalk (C-D-A) | 408 | 309 | 343 | 144 | 411 | 412 | 515 | 524 | 427 | 453 | 113 | 407 | 52 | 322 | 9 | 211 | 345 | 71 | 261 | 92 |
| *Blvd & W. 35th St* | Sidewalk A | 99 | 323 | 522 | 195 | 214 | 214 | 785 | 781 | 316 | 86 | 155 | 500 | 9 | 305 | 16 | 557 | 152 | 35 | 211 | 120 |
| | Sidewalk B | 398 | 184 | 228 | 262 | 486 | 480 | 257 | 279 | 148 | 351 | 212 | 230 | 15 | 135 | 13 | 15 | 252 | 96 | 78 | 49 |
| | Sidewalk C | 37 | 253 | 334 | 448 | 180 | 216 | 460 | 458 | 236 | 80 | 356 | 270 | 8 | 355 | 17 | 224 | 447 | 23 | 333 | 92 |
| | Sidewalk D | 929 | 469 | 39 | 53 | 823 | 829 | 62 | 103 | 411 | 895 | 9 | 66 | 26 | 284 | 4 | 255 | 340 | 145 | 157 | 10 |
| | Corner A & B | 2 | 1 | 3 | 3 | 8 | 8 | 3 | 3 | 1 | 2 | 2 | 2 | 0 | 268 | 0 | 0 | 54 | 1 | 2 | 2 |
| | Corner C & D | 2 | 21 | 0 | 0 | 4 | 4 | 0 | 0 | 23 | 2 | 1 | 0 | 1 | 175 | 0 | 0 | 200 | 2 | 0 | 0 |
| | Crosswalk (A-B-C) | 317 | 309 | 443 | 273 | 437 | 445 | 437 | 444 | 283 | 294 | 205 | 413 | 17 | 75 | 18 | 81 | 169 | 66 | 178 | 95 |
| | Crosswalk (C-D-A) | 483 | 379 | 799 | 262 | 343 | 394 | 690 | 694 | 310 | 490 | 216 | 776 | 19 | 221 | 19 | 326 | 327 | 58 | 200 | 128 |

# Appendix S.5.2

**PEDESTRIAN VOLUMES (SIDEWALKS, CORNERS, AND CROSSWALKS)**
**2025 FUTURE WITH THE PROPOSED ACTION**

| Intersection | Elements | Weekday AM Peak 15-Min. | | | | Weekday MD Peak 15-Min. | | | | Weekday PM Peak 15-Min. | | | | Special Events Evening Peak 15-Min. | | | | Special Events Sunday Peak 15-Min. | | | |
|---|---|---|---|---|---|---|---|---|---|---|---|---|---|---|---|---|---|---|---|---|---|
| ***Blvd & W. 36th St*** | Sidewalk A | 41 | 82 | 234 | 142 | 90 | 98 | 573 | 559 | 100 | 68 | 138 | 220 | 12 | 12 | 14 | 19 | 101 | 40 | 137 | 89 |
| | Sidewalk B | 190 | 147 | 39 | 81 | 373 | 360 | 110 | 119 | 137 | 168 | 108 | 62 | 16 | 18 | 11 | 10 | 151 | 95 | 99 | 40 |
| | Sidewalk C | 36 | 101 | 311 | 262 | 151 | 157 | 438 | 432 | 121 | 61 | 144 | 192 | 12 | 245 | 13 | 132 | 318 | 39 | 248 | 87 |
| | Sidewalk D | 258 | 233 | 190 | 176 | 670 | 656 | 86 | 83 | 213 | 211 | 86 | 101 | 12 | 313 | 19 | 78 | 196 | 95 | 164 | 49 |
| | Corner A & B | 5 | 4 | 3 | 2 | 13 | 13 | 3 | 3 | 8 | 8 | 1 | 1 | 2 | 3 | 0 | 0 | 32 | 5 | 2 | 2 |
| | Corner C & D | 8 | 28 | 0 | 0 | 52 | 52 | 0 | 0 | 29 | 7 | 0 | 0 | 1 | 118 | 0 | 0 | 143 | 6 | 0 | 0 |
| | Crosswalk (A-B-C) | 51 | 96 | 196 | 151 | 132 | 139 | 377 | 365 | 116 | 75 | 134 | 194 | 14 | 12 | 14 | 16 | 111 | 49 | 143 | 89 |
| | Crosswalk (C-D-A) | 164 | 225 | 265 | 176 | 175 | 174 | 622 | 607 | 161 | 87 | 177 | 251 | 18 | 134 | 14 | 20 | 224 | 52 | 146 | 102 |
| ***Blvd & W. 37th St*** | Sidewalk A | 53 | 93 | 206 | 479 | 226 | 235 | 572 | 564 | 94 | 49 | 447 | 211 | 6 | 7 | 17 | 19 | 104 | 35 | 142 | 86 |
| | Sidewalk B | 183 | 152 | 88 | 110 | 350 | 344 | 283 | 273 | 140 | 154 | 135 | 70 | 17 | 25 | 12 | 10 | 142 | 102 | 149 | 59 |
| | Sidewalk C | 17 | 74 | 210 | 156 | 49 | 55 | 331 | 323 | 88 | 24 | 148 | 189 | 3 | 2 | 17 | 20 | 57 | 13 | 149 | 103 |
| | Sidewalk D | 220 | 565 | 29 | 23 | 576 | 558 | 21 | 29 | 564 | 214 | 14 | 28 | 20 | 21 | 2 | 4 | 156 | 94 | 72 | 15 |
| | Corner A & B | 1 | 1 | 1 | 1 | 7 | 7 | 1 | 1 | 1 | 1 | 1 | 1 | 0 | 2 | 0 | 0 | 27 | 1 | 1 | 1 |
| | Corner C & D | 3 | 11 | 0 | 5 | 3 | 3 | 1 | 1 | 12 | 3 | 5 | 0 | 0 | 0 | 0 | 0 | 21 | 2 | 0 | 0 |
| | Crosswalk (A-B-C) | 96 | 129 | 205 | 163 | 339 | 330 | 326 | 317 | 147 | 74 | 156 | 179 | 11 | 14 | 18 | 22 | 132 | 65 | 165 | 103 |
| | Crosswalk (C-D-A) | 39 | 108 | 250 | 520 | 80 | 85 | 567 | 552 | 120 | 39 | 498 | 243 | 5 | 5 | 19 | 22 | 83 | 25 | 159 | 98 |
| ***Blvd & W. 38th St*** | Sidewalk A | 49 | 93 | 188 | 748 | 210 | 217 | 422 | 420 | 93 | 46 | 697 | 197 | 5 | 5 | 27 | 22 | 98 | 31 | 171 | 87 |
| | Sidewalk B | 140 | 171 | 45 | 139 | 234 | 235 | 251 | 263 | 148 | 115 | 116 | 49 | 16 | 20 | 10 | 7 | 158 | 98 | 74 | 37 |
| | Sidewalk C | 38 | 131 | 188 | 170 | 150 | 154 | 299 | 298 | 140 | 41 | 143 | 165 | 10 | 18 | 19 | 29 | 73 | 30 | 136 | 103 |
| | Sidewalk D | 179 | 943 | 53 | 38 | 508 | 506 | 38 | 47 | 886 | 185 | 25 | 54 | 31 | 23 | 4 | 7 | 151 | 81 | 83 | 27 |
| | Corner A & B | 0 | 0 | 2 | 0 | 0 | 0 | 1 | 1 | 0 | 0 | 1 | 2 | 0 | 0 | 0 | 1 | 37 | 0 | 1 | 1 |
| | Corner C & D | 5 | 10 | 1 | 18 | 48 | 48 | 3 | 2 | 10 | 4 | 21 | 1 | 1 | 7 | 0 | 0 | 22 | 4 | 1 | 0 |
| | Crosswalk (A-B-C) | 74 | 164 | 161 | 194 | 297 | 308 | 243 | 245 | 138 | 66 | 163 | 138 | 11 | 8 | 19 | 22 | 109 | 52 | 137 | 97 |
| | Crosswalk (C-D-A) | 72 | 214 | 209 | 815 | 162 | 167 | 452 | 455 | 213 | 67 | 756 | 230 | 16 | 16 | 24 | 19 | 100 | 48 | 159 | 84 |

# Appendix S.5.3

**Existing Conditions - Sidewalks Level of Service**

| | | AM | | | | | | MD | | | | | PM | | | | | SE-EVE | | | | | SE-SUN | | | | |
|---|---|---|---|---|---|---|---|---|---|---|---|---|---|---|---|---|---|---|---|---|---|---|---|---|---|---|---|
| | | Vol. Two- | Sidewalk | Average | | Platoon | | Vol. Two- | Average | | Platoon | | Vol. Two- | Average | | Platoon | | Vol. Two- | Average | | Platoon | | Vol. Two- | Average | | Platoon | |
| Intersection | Side-walk | Way | Width | p/m/f | LOS | p/m/f | LOS | Way | p/m/f | LOS | p/m/f | LOS | Way | p/m/f | LOS | p/m/f | LOS | Way | p/m/f | LOS | p/m/f | LOS | Way | p/m/f | LOS | p/m/f | LOS |
| Twelfth Ave @ 30th St | 1 | 59 | 13 | 0 | A | 4 | B | 31 | 0 | A | 4 | B | 49 | 0 | A | 4 | B | 29 | 0 | A | 4 | B | 44 | 0 | A | 4 | B |
| | 2 | 0 | 9 | 0 | A | 4 | B | 2 | 0 | A | 4 | B | 6 | 0 | A | 4 | B | 9 | 0 | A | 4 | B | 7 | 0 | A | 4 | B |
| | 3 | 0 | 10 | 0 | A | 4 | B | 0 | 0 | A | 4 | B | 2 | 0 | A | 4 | B | 7 | 0 | A | 4 | B | 3 | 0 | A | 4 | B |
| | 4 | 2 | 10 | 0 | A | 4 | B | 1 | 0 | A | 4 | B | 3 | 0 | A | 4 | B | 0 | 0 | A | 4 | B | 2 | 0 | A | 4 | B |
| | 5 | 4 | 12 | 0 | A | 4 | B | 2 | 0 | A | 4 | B | 2 | 0 | A | 4 | B | 3 | 0 | A | 4 | B | 0 | 0 | A | 4 | B |
| | 6 | 44 | 13 | 0 | A | 4 | B | 32 | 0 | A | 4 | B | 47 | 0 | A | 4 | B | 30 | 0 | A | 4 | B | 44 | 0 | A | 4 | B |
| Twelfth Ave @ 34th St | 1 | 4 | 13 | 0 | A | 4 | B | 7 | 0 | A | 4 | B | 3 | 0 | A | 4 | B | 0 | 0 | A | 4 | B | 32 | 0 | A | 4 | B |
| | 2 | 0 | 9 | 0 | A | 4 | B | 3 | 0 | A | 4 | B | 1 | 0 | A | 4 | B | 1 | 0 | A | 4 | B | 9 | 0 | A | 4 | B |
| | 3 | 5 | 15 | 0 | A | 4 | B | 7 | 0 | A | 4 | B | 4 | 0 | A | 4 | B | 2 | 0 | A | 4 | B | 3 | 0 | A | 4 | B |
| | 4 | 4 | 15 | 0 | A | 4 | B | 1 | 0 | A | 4 | B | 7 | 0 | A | 4 | B | 3 | 0 | A | 4 | B | 1 | 0 | A | 4 | B |
| | 5 | 0 | 9 | 0 | A | 4 | B | 2 | 0 | A | 4 | B | 0 | 0 | A | 4 | B | 1 | 0 | A | 4 | B | 5 | 0 | A | 4 | B |
| | 6 | 10 | 13 | 0 | A | 4 | B | 5 | 0 | A | 4 | B | 2 | 0 | A | 4 | B | 0 | 0 | A | 4 | B | 33 | 0 | A | 4 | B |
| Twelfth Ave @ 39th St | 1 | 0 | 13 | 0 | A | 4 | B | 0 | 0 | A | 4 | B | 0 | 0 | A | 4 | B | 67 | 0 | A | 4 | B | 122 | 1 | A | 5 | B |
| | 2 | 0 | 10 | 0 | A | 4 | B | 11 | 0 | A | 4 | B | 3 | 0 | A | 4 | B | 3 | 0 | A | 4 | B | 13 | 0 | A | 4 | B |
| | 3 | 0 | 10 | 0 | A | 4 | B | 0 | 0 | A | 4 | B | 0 | 0 | A | 4 | B | 0 | 0 | A | 4 | B | 4 | 0 | A | 4 | B |
| | 4 | 1 | 10 | 0 | A | 4 | B | 23 | 0 | A | 4 | B | 8 | 0 | A | 4 | B | 8 | 0 | A | 4 | B | 28 | 0 | A | 4 | B |
| | 5 | 3 | 15 | 0 | A | 4 | B | 13 | 0 | A | 4 | B | 4 | 0 | A | 4 | B | 4 | 0 | A | 4 | B | 16 | 0 | A | 4 | B |
| | 6 | 0 | 13 | 0 | A | 4 | B | 11 | 0 | A | 4 | B | 2 | 0 | A | 4 | B | 67 | 0 | A | 4 | B | 122 | 1 | A | 5 | B |
| Twelfth Ave @ 40th St | 1 | 0 | 13 | 0 | A | 4 | B | 1 | 0 | A | 4 | B | 0 | 0 | A | 4 | B | | | | | | | | | | |
| | 2 | 0 | 10 | 0 | A | 4 | B | 3 | 0 | A | 4 | B | 5 | 0 | A | 4 | B | | | | | | | | | | |
| | 3 | 0 | 9 | 0 | A | 4 | B | 2 | 0 | A | 4 | B | 3 | 0 | A | 4 | B | | | | | | | | | | |
| | 4 | 0 | 9 | 0 | A | 4 | B | 1 | 0 | A | 4 | B | 0 | 0 | A | 4 | B | | | | | | | | | | |
| | 5 | 0 | 11 | 0 | A | 4 | B | 2 | 0 | A | 4 | B | 1 | 0 | A | 4 | B | | | | | | | | | | |
| | 6 | 0 | 13 | 0 | A | 4 | B | 0 | 0 | A | 4 | B | 0 | 0 | A | 4 | B | | | | | | | | | | |
| Twelfth Ave @ 42nd St | 1 | 3 | 13 | 0 | A | 4 | B | 0 | 0 | A | 4 | B | 0 | 0 | A | 4 | B | | | | | | | | | | |
| | 2 | 14 | 17 | 0 | A | 4 | B | 23 | 0 | A | 4 | B | 26 | 0 | A | 4 | B | | | | | | | | | | |
| | 3 | 14 | 12 | 0 | A | 4 | B | 17 | 0 | A | 4 | B | 22 | 0 | A | 4 | B | | | | | | | | | | |
| | 4 | 29 | 23 | 0 | A | 4 | B | 12 | 0 | A | 4 | B | 30 | 0 | A | 4 | B | | | | | | | | | | |
| | 5 | 5 | 17 | 0 | A | 4 | B | 8 | 0 | A | 4 | B | 16 | 0 | A | 4 | B | | | | | | | | | | |
| | 6 | 5 | 13 | 0 | A | 4 | B | 0 | 0 | A | 4 | B | 7 | 0 | A | 4 | B | | | | | | | | | | |
| Eleventh Ave @ 29th S | 1 | 2 | 12 | 0 | A | 4 | B | 3 | 0 | A | 4 | B | 14 | 0 | A | 4 | B | | | | | | | | | | |
| | 2 | 1 | 12 | 0 | A | 4 | B | 6 | 0 | A | 4 | B | 5 | 0 | A | 4 | B | | | | | | | | | | |
| | 3 | 4 | 10 | 0 | A | 4 | B | 7 | 0 | A | 4 | B | 1 | 0 | A | 4 | B | | | | | | | | | | |
| | 4 | 8 | 10 | 0 | A | 4 | B | 6 | 0 | A | 4 | B | 5 | 0 | A | 4 | B | | | | | | | | | | |
| | 5 | 13 | 12 | 0 | A | 4 | B | 20 | 0 | A | 4 | B | 13 | 0 | A | 4 | B | | | | | | | | | | |
| | 6 | 0 | 12 | 0 | A | 4 | B | 5 | 0 | A | 4 | B | 11 | 0 | A | 4 | B | | | | | | | | | | |
| | 7 | 0 | 10 | 0 | A | 4 | B | 0 | 0 | A | 4 | B | 7 | 0 | A | 4 | B | | | | | | | | | | |
| | 8 | 0 | 10 | 0 | A | 4 | B | 3 | 0 | A | 4 | B | 4 | 0 | A | 4 | B | | | | | | | | | | |
| Eleventh Ave @ 30th S | 1 | 2 | 12 | 0 | A | 4 | B | 11 | 0 | A | 4 | B | 10 | 0 | A | 4 | B | 1 | 0 | A | 4 | B | 2 | 0 | A | 4 | B |
| | 2 | 1 | 12 | 0 | A | 4 | B | 7 | 0 | A | 4 | B | 7 | 0 | A | 4 | B | 6 | 0 | A | 4 | B | 0 | 0 | A | 4 | B |
| | 3 | 1 | 10 | 0 | A | 4 | B | 5 | 0 | A | 4 | B | 0 | 0 | A | 4 | B | 4 | 0 | A | 4 | B | 2 | 0 | A | 4 | B |
| | 4 | 3 | 10 | 0 | A | 4 | B | 1 | 0 | A | 4 | B | 1 | 0 | A | 4 | B | 2 | 0 | A | 4 | B | 2 | 0 | A | 4 | B |
| | 5 | 2 | 12 | 0 | A | 4 | B | 10 | 0 | A | 4 | B | 16 | 0 | A | 4 | B | 0 | 0 | A | 4 | B | 3 | 0 | A | 4 | B |
| | 6 | 3 | 12 | 0 | A | 4 | B | 5 | 0 | A | 4 | B | 12 | 0 | A | 4 | B | 0 | 0 | A | 4 | B | 2 | 0 | A | 4 | B |
| | 7 | 1 | 10 | 0 | A | 4 | B | 5 | 0 | A | 4 | B | 5 | 0 | A | 4 | B | 1 | 0 | A | 4 | B | 2 | 0 | A | 4 | B |
| | 8 | 2 | 10 | 0 | A | 4 | B | 15 | 0 | A | 4 | B | 8 | 0 | A | 4 | B | 0 | 0 | A | 4 | B | 0 | 0 | A | 4 | B |
| Eleventh Ave @ 33rd S | 1 | 9 | 12 | 0 | A | 4 | B | 5 | 0 | A | 4 | B | 4 | 0 | A | 4 | B | 3 | 0 | A | 4 | B | 2 | 0 | A | 4 | B |
| | 2 | 4 | 12 | 0 | A | 4 | B | 11 | 0 | A | 4 | B | 11 | 0 | A | 4 | B | 14 | 0 | A | 4 | B | 1 | 0 | A | 4 | B |
| | 3 | 1 | 10 | 0 | A | 4 | B | 10 | 0 | A | 4 | B | 11 | 0 | A | 4 | B | 13 | 0 | A | 4 | B | 3 | 0 | A | 4 | B |
| | 4 | 2 | 10 | 0 | A | 4 | B | 2 | 0 | A | 4 | B | 3 | 0 | A | 4 | B | 2 | 0 | A | 4 | B | 2 | 0 | A | 4 | B |
| | 5 | 4 | 12 | 0 | A | 4 | B | 6 | 0 | A | 4 | B | 8 | 0 | A | 4 | B | 3 | 0 | A | 4 | B | 2 | 0 | A | 4 | B |
| | 6 | 6 | 12 | 0 | A | 4 | B | 3 | 0 | A | 4 | B | 3 | 0 | A | 4 | B | 6 | 0 | A | 4 | B | 1 | 0 | A | 4 | B |
| | 7 | 5 | 10 | 0 | A | 4 | B | 0 | 0 | A | 4 | B | 1 | 0 | A | 4 | B | 1 | 0 | A | 4 | B | 2 | 0 | A | 4 | B |
| | 8 | 1 | 10 | 0 | A | 4 | B | 2 | 0 | A | 4 | B | 0 | 0 | A | 4 | B | 0 | 0 | A | 4 | B | 1 | 0 | A | 4 | B |
| Eleventh Ave @ 34th S | 1 | 5 | 13 | 0 | A | 4 | B | 6 | 0 | A | 4 | B | 5 | 0 | A | 4 | B | 3 | 0 | A | 4 | B | 23 | 0 | A | 4 | B |
| | 2 | 2 | 9 | 0 | A | 4 | B | 6 | 0 | A | 4 | B | 9 | 0 | A | 4 | B | 9 | 0 | A | 4 | B | 8 | 0 | A | 4 | B |
| | 3 | 10 | 17 | 0 | A | 4 | B | 28 | 0 | A | 4 | B | 18 | 0 | A | 4 | B | 5 | 0 | A | 4 | B | 39 | 0 | A | 4 | B |
| | 4 | 0 | 17 | 0 | A | 4 | B | 17 | 0 | A | 4 | B | 15 | 0 | A | 4 | B | 38 | 0 | A | 4 | B | 10 | 0 | A | 4 | B |
| | 5 | 18 | 12 | 0 | A | 4 | B | 4 | 0 | A | 4 | B | 9 | 0 | A | 4 | B | 22 | 0 | A | 4 | B | 5 | 0 | A | 4 | B |
| | 6 | 0 | 12 | 0 | A | 4 | B | 7 | 0 | A | 4 | B | 6 | 0 | A | 4 | B | 3 | 0 | A | 4 | B | 2 | 0 | A | 4 | B |
| | 7 | 9 | 17 | 0 | A | 4 | B | 17 | 0 | A | 4 | B | 11 | 0 | A | 4 | B | 5 | 0 | A | 4 | B | 2 | 0 | A | 4 | B |
| | 8 | 17 | 17 | 0 | A | 4 | B | 24 | 0 | A | 4 | B | 10 | 0 | A | 4 | B | 16 | 0 | A | 4 | B | 14 | 0 | A | 4 | B |
| Eleventh Ave @ 35th S | 1 | 7 | 16 | 0 | A | 4 | B | 10 | 0 | A | 4 | B | 11 | 0 | A | 4 | B | | | | | | | | | | |
| | 2 | 5 | 14 | 0 | A | 4 | B | 3 | 0 | A | 4 | B | 3 | 0 | A | 4 | B | | | | | | | | | | |
| | 3 | 0 | 12 | 0 | A | 4 | B | 1 | 0 | A | 4 | B | 2 | 0 | A | 4 | B | | | | | | | | | | |
| | 4 | 2 | 12 | 0 | A | 4 | B | 9 | 0 | A | 4 | B | 0 | 0 | A | 4 | B | | | | | | | | | | |
| | 5 | 0 | 8 | 0 | A | 4 | B | 3 | 0 | A | 4 | B | 1 | 0 | A | 4 | B | | | | | | | | | | |
| | 6 | 7 | 12 | 0 | A | 4 | B | 8 | 0 | A | 4 | B | 8 | 0 | A | 4 | B | | | | | | | | | | |
| Eleventh Ave @ 36th S | 1 | 6 | 12 | 0 | A | 4 | B | 11 | 0 | A | 4 | B | 9 | 0 | A | 4 | B | | | | | | | | | | |
| | 2 | 2 | 7 | 0 | A | 4 | B | 7 | 0 | A | 4 | B | 6 | 0 | A | 4 | B | | | | | | | | | | |
| | 3 | 0 | 10 | 0 | A | 4 | B | 2 | 0 | A | 4 | B | 1 | 0 | A | 4 | B | | | | | | | | | | |
| | 4 | 5 | 8 | 0 | A | 4 | B | 4 | 0 | A | 4 | B | 4 | 0 | A | 4 | B | | | | | | | | | | |
| | 5 | 1 | 12 | 0 | A | 4 | B | 4 | 0 | A | 4 | B | 5 | 0 | A | 4 | B | | | | | | | | | | |
| | 6 | 9 | 13 | 0 | A | 4 | B | 6 | 0 | A | 4 | B | 11 | 0 | A | 4 | B | | | | | | | | | | |
| Eleventh Ave @ 37th S | 1 | 1 | 12 | 0 | A | 4 | B | 0 | 0 | A | 4 | B | 3 | 0 | A | 4 | B | | | | | | | | | | |
| | 2 | 0 | 7 | 0 | A | 4 | B | 17 | 0 | A | 4 | B | 14 | 0 | A | 4 | B | | | | | | | | | | |
| | 3 | 0 | 9 | 0 | A | 4 | B | 8 | 0 | A | 4 | B | 0 | 0 | A | 4 | B | | | | | | | | | | |
| | 4 | 1 | 9 | 0 | A | 4 | B | 6 | 0 | A | 4 | B | 1 | 0 | A | 4 | B | | | | | | | | | | |
| | 5 | 0 | 7 | 0 | A | 4 | B | 0 | 0 | A | 4 | B | 0 | 0 | A | 4 | B | | | | | | | | | | |
| | 6 | 0 | 12 | 0 | A | 4 | B | 7 | 0 | A | 4 | B | 7 | 0 | A | 4 | B | | | | | | | | | | |

# Appendix S.5.3

**Existing Conditions - Sidewalks Level of Service**

| | | AM | | | | | | MD | | | | | PM | | | | | SE-EVE | | | | | SE-SUN | | | | |
|---|---|---|---|---|---|---|---|---|---|---|---|---|---|---|---|---|---|---|---|---|---|---|---|---|---|---|---|
| | | Vol. Two- | Sidewalk | Average | | Platoon | | Vol. Two- | Average | | Platoon | | Vol. Two- | Average | | Platoon | | Vol. Two- | Average | | Platoon | | Vol. Two- | Average | | Platoon | |
| Intersection | Side-walk | Way | Width | p/m/f | LOS | p/m/f | LOS | Way | p/m/f | LOS | p/m/f | LOS | Way | p/m/f | LOS | p/m/f | LOS | Way | p/m/f | LOS | p/m/f | LOS | Way | p/m/f | LOS | p/m/f | LOS |
| Eleventh Ave @ 38th S | 1 | 3 | 12 | 0 | A | 4 | B | 0 | 0 | A | 4 | B | 0 | 0 | A | 4 | B | | | | | | | | | | |
| | 2 | 0 | 7 | 0 | A | 4 | B | 0 | 0 | A | 4 | B | 0 | 0 | A | 4 | B | | | | | | | | | | |
| | 3 | 4 | 8 | 0 | A | 4 | B | 1 | 0 | A | 4 | B | 0 | 0 | A | 4 | B | | | | | | | | | | |
| | 4 | 1 | 8 | 0 | A | 4 | B | 5 | 0 | A | 4 | B | 2 | 0 | A | 4 | B | | | | | | | | | | |
| | 5 | 0 | 7 | 0 | A | 4 | B | 0 | 0 | A | 4 | B | 0 | 0 | A | 4 | B | | | | | | | | | | |
| | 6 | 0 | 12 | 0 | A | 4 | B | 0 | 0 | A | 4 | B | 0 | 0 | A | 4 | B | | | | | | | | | | |
| Eleventh Ave @ 39th S | 1 | 77 | 11 | 0 | A | 4 | B | 7 | 0 | A | 4 | B | 3 | 0 | A | 4 | B | 0 | 0 | A | 4 | B | 6 | 0 | A | 4 | B |
| | 2 | 3 | 7 | 0 | A | 4 | B | 0 | 0 | A | 4 | B | 4 | 0 | A | 4 | B | 0 | 0 | A | 4 | B | 0 | 0 | A | 4 | B |
| | 3 | 0 | 9 | 0 | A | 4 | B | 20 | 0 | A | 4 | B | 1 | 0 | A | 4 | B | 5 | 0 | A | 4 | B | 4 | 0 | A | 4 | B |
| | 4 | 5 | 8 | 0 | A | 4 | B | 1 | 0 | A | 4 | B | 1 | 0 | A | 4 | B | 7 | 0 | A | 4 | B | 15 | 0 | A | 4 | B |
| | 5 | 8 | 7 | 0 | A | 4 | B | 0 | 0 | A | 4 | B | 0 | 0 | A | 4 | B | 1 | 0 | A | 4 | B | 0 | 0 | A | 4 | B |
| | 6 | 40 | 12 | 0 | A | 4 | B | 6 | 0 | A | 4 | B | 1 | 0 | A | 4 | B | 0 | 0 | A | 4 | B | 18 | 0 | A | 4 | B |
| | 7 | 1 | 10 | 0 | A | 4 | B | 0 | 0 | A | 4 | B | 2 | 0 | A | 4 | B | 1 | 0 | A | 4 | B | 3 | 0 | A | 4 | B |
| | 8 | 1 | 12 | 0 | A | 4 | B | 12 | 0 | A | 4 | B | 4 | 0 | A | 4 | B | 1 | 0 | A | 4 | B | 0 | 0 | A | 4 | B |
| Eleventh Ave @ 40th S | 1 | 27 | 12 | 0 | A | 4 | B | 3 | 0 | A | 4 | B | 73 | 0 | A | 4 | B | | | | | | | | | | |
| | 2 | 5 | 7 | 0 | A | 4 | B | 3 | 0 | A | 4 | B | 21 | 0 | A | 4 | B | | | | | | | | | | |
| | 3 | 3 | 10 | 0 | A | 4 | B | 5 | 0 | A | 4 | B | 0 | 0 | A | 4 | B | | | | | | | | | | |
| | 4 | 1 | 10 | 0 | A | 4 | B | 1 | 0 | A | 4 | B | 7 | 0 | A | 4 | B | | | | | | | | | | |
| | 5 | 0 | 7 | 0 | A | 4 | B | 5 | 0 | A | 4 | B | 16 | 0 | A | 4 | B | | | | | | | | | | |
| | 6 | 15 | 12 | 0 | A | 4 | B | 27 | 0 | A | 4 | B | 99 | 1 | A | 5 | B | | | | | | | | | | |
| | 7 | 1 | 10 | 0 | A | 4 | B | 8 | 0 | A | 4 | B | 1 | 0 | A | 4 | B | | | | | | | | | | |
| | 8 | 11 | 10 | 0 | A | 4 | B | 3 | 0 | A | 4 | B | 5 | 0 | A | 4 | B | | | | | | | | | | |
| Eleventh Ave @ 42nd S | 1 | 20 | 13 | 0 | A | 4 | B | 1 | 0 | A | 4 | B | 37 | 0 | A | 4 | B | 6 | 0 | A | 4 | B | 17 | 0 | A | 4 | B |
| | 2 | 25 | 13 | 0 | A | 4 | B | 7 | 0 | A | 4 | B | 12 | 0 | A | 4 | B | 17 | 0 | A | 4 | B | 29 | 0 | A | 4 | B |
| | 3 | 0 | 12 | 0 | A | 4 | B | 18 | 0 | A | 4 | B | 45 | 0 | A | 4 | B | 23 | 0 | A | 4 | B | 31 | 0 | A | 4 | B |
| | 4 | 37 | 12 | 0 | A | 4 | B | 24 | 0 | A | 4 | B | 40 | 0 | A | 4 | B | 23 | 0 | A | 4 | B | 37 | 0 | A | 4 | B |
| | 5 | 9 | 12 | 0 | A | 4 | B | 17 | 0 | A | 4 | B | 1 | 0 | A | 4 | B | 8 | 0 | A | 4 | B | 8 | 0 | A | 4 | B |
| | 6 | 10 | 12 | 0 | A | 4 | B | 5 | 0 | A | 4 | B | 4 | 0 | A | 4 | B | 2 | 0 | A | 4 | B | 13 | 0 | A | 4 | B |
| | 7 | 27 | 12 | 0 | A | 4 | B | 30 | 0 | A | 4 | B | 33 | 0 | A | 4 | B | 18 | 0 | A | 4 | B | 50 | 0 | A | 4 | B |
| | 8 | 1 | 12 | 0 | A | 4 | B | 10 | 0 | A | 4 | B | 20 | 0 | A | 4 | B | 18 | 0 | A | 4 | B | 9 | 0 | A | 4 | B |
| Tenth Ave @ 29th St | 1 | 14 | 12 | 0 | A | 4 | B | 22 | 0 | A | 4 | B | 13 | 0 | A | 4 | B | | | | | | | | | | |
| | 2 | 6 | 12 | 0 | A | 4 | B | 4 | 0 | A | 4 | B | 14 | 0 | A | 4 | B | | | | | | | | | | |
| | 3 | 7 | 10 | 0 | A | 4 | B | 4 | 0 | A | 4 | B | 12 | 0 | A | 4 | B | | | | | | | | | | |
| | 4 | 11 | 10 | 0 | A | 4 | B | 34 | 0 | A | 4 | B | 11 | 0 | A | 4 | B | | | | | | | | | | |
| | 5 | 8 | 12 | 0 | A | 4 | B | 16 | 0 | A | 4 | B | 17 | 0 | A | 4 | B | | | | | | | | | | |
| | 6 | 10 | 12 | 0 | A | 4 | B | 10 | 0 | A | 4 | B | 8 | 0 | A | 4 | B | | | | | | | | | | |
| | 7 | 14 | 10 | 0 | A | 4 | B | 7 | 0 | A | 4 | B | 18 | 0 | A | 4 | B | | | | | | | | | | |
| | 8 | 9 | 10 | 0 | A | 4 | B | 15 | 0 | A | 4 | B | 8 | 0 | A | 4 | B | | | | | | | | | | |
| Tenth Ave @ 30th St | 1 | 8 | 13 | 0 | A | 4 | B | 14 | 0 | A | 4 | B | 16 | 0 | A | 4 | B | 8 | 0 | A | 4 | B | 12 | 0 | A | 4 | B |
| | 2 | 1 | 12 | 0 | A | 4 | B | 24 | 0 | A | 4 | B | 8 | 0 | A | 4 | B | 6 | 0 | A | 4 | B | 2 | 0 | A | 4 | B |
| | 3 | 1 | 10 | 0 | A | 4 | B | 1 | 0 | A | 4 | B | 4 | 0 | A | 4 | B | 0 | 0 | A | 4 | B | 3 | 0 | A | 4 | B |
| | 4 | 9 | 12 | 0 | A | 4 | B | 10 | 0 | A | 4 | B | 9 | 0 | A | 4 | B | 6 | 0 | A | 4 | B | 4 | 0 | A | 4 | B |
| | 5 | 15 | 12 | 0 | A | 4 | B | 9 | 0 | A | 4 | B | 8 | 0 | A | 4 | B | 9 | 0 | A | 4 | B | 3 | 0 | A | 4 | B |
| | 6 | 9 | 12 | 0 | A | 4 | B | 12 | 0 | A | 4 | B | 9 | 0 | A | 4 | B | 9 | 0 | A | 4 | B | 5 | 0 | A | 4 | B |
| | 7 | 6 | 11 | 0 | A | 4 | B | 9 | 0 | A | 4 | B | 13 | 0 | A | 4 | B | 8 | 0 | A | 4 | B | 8 | 0 | A | 4 | B |
| | 8 | 2 | 11 | 0 | A | 4 | B | 6 | 0 | A | 4 | B | 8 | 0 | A | 4 | B | 1 | 0 | A | 4 | B | 3 | 0 | A | 4 | B |
| Tenth Ave @ 31st St | 1 | 8 | 12 | 0 | A | 4 | B | 9 | 0 | A | 4 | B | 27 | 0 | A | 4 | B | 6 | 0 | A | 4 | B | 13 | 0 | A | 4 | B |
| | 2 | 26 | 12 | 0 | A | 4 | B | 37 | 0 | A | 4 | B | 22 | 0 | A | 4 | B | 6 | 0 | A | 4 | B | 5 | 0 | A | 4 | B |
| | 3 | 10 | 11 | 0 | A | 4 | B | 21 | 0 | A | 4 | B | 7 | 0 | A | 4 | B | 0 | 0 | A | 4 | B | 0 | 0 | A | 4 | B |
| | 4 | 9 | 11 | 0 | A | 4 | B | 11 | 0 | A | 4 | B | 12 | 0 | A | 4 | B | 6 | 0 | A | 4 | B | 6 | 0 | A | 4 | B |
| | 5 | 16 | 12 | 0 | A | 4 | B | 16 | 0 | A | 4 | B | 23 | 0 | A | 4 | B | 7 | 0 | A | 4 | B | 6 | 0 | A | 4 | B |
| | 6 | 8 | 12 | 0 | A | 4 | B | 16 | 0 | A | 4 | B | 28 | 0 | A | 4 | B | 5 | 0 | A | 4 | B | 0 | 0 | A | 4 | B |
| Tenth Ave @ 33rd St | 1 | 45 | 12 | 0 | A | 4 | B | 15 | 0 | A | 4 | B | 17 | 0 | A | 4 | B | 11 | 0 | A | 4 | B | 16 | 0 | A | 4 | B |
| | 2 | 28 | 12 | 0 | A | 4 | B | 32 | 0 | A | 4 | B | 21 | 0 | A | 4 | B | 16 | 0 | A | 4 | B | 8 | 0 | A | 4 | B |
| | 3 | 24 | 10 | 0 | A | 4 | B | 33 | 0 | A | 4 | B | 12 | 0 | A | 4 | B | 5 | 0 | A | 4 | B | 7 | 0 | A | 4 | B |
| | 4 | 9 | 10 | 0 | A | 4 | B | 16 | 0 | A | 4 | B | 20 | 0 | A | 4 | B | 19 | 0 | A | 4 | B | 11 | 0 | A | 4 | B |
| | 5 | 14 | 12 | 0 | A | 4 | B | 7 | 0 | A | 4 | B | 22 | 0 | A | 4 | B | 9 | 0 | A | 4 | B | 7 | 0 | A | 4 | B |
| | 6 | 11 | 12 | 0 | A | 4 | B | 15 | 0 | A | 4 | B | 11 | 0 | A | 4 | B | 14 | 0 | A | 4 | B | 14 | 0 | A | 4 | B |
| | 7 | 24 | 10 | 0 | A | 4 | B | 27 | 0 | A | 4 | B | 16 | 0 | A | 4 | B | 2 | 0 | A | 4 | B | 6 | 0 | A | 4 | B |
| | 8 | 11 | 10 | 0 | A | 4 | B | 139 | 1 | A | 5 | B | 17 | 0 | A | 4 | B | 6 | 0 | A | 4 | B | 6 | 0 | A | 4 | B |
| Tenth Ave @ 34th St | 1 | 23 | 12 | 0 | A | 4 | B | 57 | 0 | A | 4 | B | 37 | 0 | A | 4 | B | 17 | 0 | A | 4 | B | 12 | 0 | A | 4 | B |
| | 2 | 26 | 12 | 0 | A | 4 | B | 41 | 0 | A | 4 | B | 27 | 0 | A | 4 | B | 32 | 0 | A | 4 | B | 9 | 0 | A | 4 | B |
| | 3 | 72 | 17 | 0 | A | 4 | B | 49 | 0 | A | 4 | B | 48 | 0 | A | 4 | B | 44 | 0 | A | 4 | B | 30 | 0 | A | 4 | B |
| | 4 | 126 | 17 | 0 | A | 4 | B | 113 | 0 | A | 4 | B | 97 | 0 | A | 4 | B | 67 | 0 | A | 4 | B | 22 | 0 | A | 4 | B |
| | 5 | 40 | 12 | 0 | A | 4 | B | 84 | 0 | A | 4 | B | 30 | 0 | A | 4 | B | 20 | 0 | A | 4 | B | 13 | 0 | A | 4 | B |
| | 6 | 20 | 12 | 0 | A | 4 | B | 40 | 0 | A | 4 | B | 15 | 0 | A | 4 | B | 20 | 0 | A | 4 | B | 8 | 0 | A | 4 | B |
| | 7 | 68 | 17 | 0 | A | 4 | B | 76 | 0 | A | 4 | B | 91 | 0 | A | 4 | B | 50 | 0 | A | 4 | B | 11 | 0 | A | 4 | B |
| | 8 | 90 | 17 | 0 | A | 4 | B | 67 | 0 | A | 4 | B | 51 | 0 | A | 4 | B | 36 | 0 | A | 4 | B | 20 | 0 | A | 4 | B |
| Tenth Ave @ 35th St | 1 | 11 | 13 | 0 | A | 4 | B | 28 | 0 | A | 4 | B | 28 | 0 | A | 4 | B | | | | | | | | | | |
| | 2 | 5 | 13 | 0 | A | 4 | B | 36 | 0 | A | 4 | B | 58 | 0 | A | 4 | B | | | | | | | | | | |
| | 3 | 42 | 12 | 0 | A | 4 | B | 35 | 0 | A | 4 | B | 54 | 0 | A | 4 | B | | | | | | | | | | |
| | 4 | 22 | 7 | 0 | A | 4 | B | 1 | 0 | A | 4 | B | 1 | 0 | A | 4 | B | | | | | | | | | | |
| | 5 | 0 | 13 | 0 | A | 4 | B | 35 | 0 | A | 4 | B | 40 | 0 | A | 4 | B | | | | | | | | | | |
| | 6 | 20 | 11 | 0 | A | 4 | B | 21 | 0 | A | 4 | B | 28 | 0 | A | 4 | B | | | | | | | | | | |
| | 7 | 28 | 10 | 0 | A | 4 | B | 33 | 0 | A | 4 | B | 21 | 0 | A | 4 | B | | | | | | | | | | |
| | 8 | 29 | 12 | 0 | A | 4 | B | 41 | 0 | A | 4 | B | 36 | 0 | A | 4 | B | | | | | | | | | | |

# Appendix S.5.3

**Existing Conditions - Sidewalks Level of Service**

| | | AM | | | | | | MD | | | | | PM | | | | | SE-EVE | | | | | SE-SUN | | | | |
|---|---|---|---|---|---|---|---|---|---|---|---|---|---|---|---|---|---|---|---|---|---|---|---|---|---|---|---|
| | | Vol. Two- | Sidewalk | Average | | Platoon | | Vol. Two- | Average | | Platoon | | Vol. Two- | Average | | Platoon | | Vol. Two- | Average | | Platoon | | Vol. Two- | Average | | Platoon | |
| Intersection | Side-walk | Way | Width | p/m/f | LOS | p/m/f | LOS | Way | p/m/f | LOS | p/m/f | LOS | Way | p/m/f | LOS | p/m/f | LOS | Way | p/m/f | LOS | p/m/f | LOS | Way | p/m/f | LOS | p/m/f | LOS |
| Tenth Ave @ 36th St | 1 | 7 | 12 | 0 | A | 4 | B | 32 | 0 | A | 4 | B | 26 | 0 | A | 4 | B | | | | | | | | | | |
| | 2 | 11 | 10 | 0 | A | 4 | B | 21 | 0 | A | 4 | B | 27 | 0 | A | 4 | B | | | | | | | | | | |
| | 3 | 12 | 9 | 0 | A | 4 | B | 12 | 0 | A | 4 | B | 12 | 0 | A | 4 | B | | | | | | | | | | |
| | 4 | 17 | 9 | 0 | A | 4 | B | 37 | 0 | A | 4 | B | 31 | 0 | A | 4 | B | | | | | | | | | | |
| | 5 | 14 | 12 | 0 | A | 4 | B | 19 | 0 | A | 4 | B | 32 | 0 | A | 4 | B | | | | | | | | | | |
| | 6 | 8 | 12 | 0 | A | 4 | B | 25 | 0 | A | 4 | B | 29 | 0 | A | 4 | B | | | | | | | | | | |
| | 7 | 12 | 9 | 0 | A | 4 | B | 24 | 0 | A | 4 | B | 23 | 0 | A | 4 | B | | | | | | | | | | |
| | 8 | 12 | 10 | 0 | A | 4 | B | 20 | 0 | A | 4 | B | 0 | 0 | A | 4 | B | | | | | | | | | | |
| Tenth Ave @ 37th St | 1 | 7 | 5 | 0 | A | 4 | B | 16 | 0 | A | 4 | B | 14 | 0 | A | 4 | B | | | | | | | | | | |
| | 2 | 24 | 5 | 0 | A | 4 | B | 34 | 0 | A | 4 | B | 22 | 0 | A | 4 | B | | | | | | | | | | |
| | 3 | 19 | 9 | 0 | A | 4 | B | 6 | 0 | A | 4 | B | 12 | 0 | A | 4 | B | | | | | | | | | | |
| | 4 | 32 | 9 | 0 | A | 4 | B | 34 | 0 | A | 4 | B | 17 | 0 | A | 4 | B | | | | | | | | | | |
| | 5 | 16 | 12 | 0 | A | 4 | B | 10 | 0 | A | 4 | B | 24 | 0 | A | 4 | B | | | | | | | | | | |
| | 6 | 3 | 12 | 0 | A | 4 | B | 16 | 0 | A | 4 | B | 13 | 0 | A | 4 | B | | | | | | | | | | |
| | 7 | 16 | 9 | 0 | A | 4 | B | 12 | 0 | A | 4 | B | 14 | 0 | A | 4 | B | | | | | | | | | | |
| | 8 | 12 | 9 | 0 | A | 4 | B | 21 | 0 | A | 4 | B | 13 | 0 | A | 4 | B | | | | | | | | | | |
| Tenth Ave @ 38th St | 1 | 16 | 12 | 0 | A | 4 | B | 14 | 0 | A | 4 | B | 13 | 0 | A | 4 | B | | | | | | | | | | |
| | 2 | 15 | 12 | 0 | A | 4 | B | 25 | 0 | A | 4 | B | 13 | 0 | A | 4 | B | | | | | | | | | | |
| | 3 | 14 | 9 | 0 | A | 4 | B | 35 | 0 | A | 4 | B | 15 | 0 | A | 4 | B | | | | | | | | | | |
| | 4 | 2 | 9 | 0 | A | 4 | B | 13 | 0 | A | 4 | B | 12 | 0 | A | 4 | B | | | | | | | | | | |
| | 5 | 7 | 12 | 0 | A | 4 | B | 14 | 0 | A | 4 | B | 18 | 0 | A | 4 | B | | | | | | | | | | |
| | 6 | 12 | 12 | 0 | A | 4 | B | 17 | 0 | A | 4 | B | 15 | 0 | A | 4 | B | | | | | | | | | | |
| | 7 | 4 | 9 | 0 | A | 4 | B | 15 | 0 | A | 4 | B | 13 | 0 | A | 4 | B | | | | | | | | | | |
| | 8 | 12 | 9 | 0 | A | 4 | B | 12 | 0 | A | 4 | B | 30 | 0 | A | 4 | B | | | | | | | | | | |
| Tenth Ave @ 39th St | 1 | 5 | 12 | 0 | A | 4 | B | 7 | 0 | A | 4 | B | 4 | 0 | A | 4 | B | | | | | | | | | | |
| | 2 | 10 | 12 | 0 | A | 4 | B | 13 | 0 | A | 4 | B | 10 | 0 | A | 4 | B | | | | | | | | | | |
| | 3 | 0 | 9 | 0 | A | 4 | B | 2 | 0 | A | 4 | B | 1 | 0 | A | 4 | B | | | | | | | | | | |
| | 4 | 9 | 9 | 0 | A | 4 | B | 7 | 0 | A | 4 | B | 9 | 0 | A | 4 | B | | | | | | | | | | |
| | 5 | 19 | 12 | 0 | A | 4 | B | 14 | 0 | A | 4 | B | 20 | 0 | A | 4 | B | | | | | | | | | | |
| | 6 | 7 | 12 | 0 | A | 4 | B | 14 | 0 | A | 4 | B | 7 | 0 | A | 4 | B | | | | | | | | | | |
| | 7 | 2 | 10 | 0 | A | 4 | B | 8 | 0 | A | 4 | B | 9 | 0 | A | 4 | B | | | | | | | | | | |
| | 8 | 0 | 7 | 0 | A | 4 | B | 2 | 0 | A | 4 | B | 0 | 0 | A | 4 | B | | | | | | | | | | |
| Tenth Ave @ 40th St | 1 | 2 | 12 | 0 | A | 4 | B | 16 | 0 | A | 4 | B | 21 | 0 | A | 4 | B | | | | | | | | | | |
| | 2 | 30 | 12 | 0 | A | 4 | B | 20 | 0 | A | 4 | B | 35 | 0 | A | 4 | B | | | | | | | | | | |
| | 3 | 7 | 9 | 0 | A | 4 | B | 11 | 0 | A | 4 | B | 25 | 0 | A | 4 | B | | | | | | | | | | |
| | 4 | 4 | 9 | 0 | A | 4 | B | 8 | 0 | A | 4 | B | 3 | 0 | A | 4 | B | | | | | | | | | | |
| | 5 | 27 | 12 | 0 | A | 4 | B | 25 | 0 | A | 4 | B | 22 | 0 | A | 4 | B | | | | | | | | | | |
| | 6 | 3 | 12 | 0 | A | 4 | B | 5 | 0 | A | 4 | B | 21 | 0 | A | 4 | B | | | | | | | | | | |
| | 7 | 4 | 10 | 0 | A | 4 | B | 4 | 0 | A | 4 | B | 0 | 0 | A | 4 | B | | | | | | | | | | |
| | 8 | 6 | 10 | 0 | A | 4 | B | 15 | 0 | A | 4 | B | 10 | 0 | A | 4 | B | | | | | | | | | | |
| Tenth Ave @ 41st St | 1 | 36 | 12 | 0 | A | 4 | B | 14 | 0 | A | 4 | B | 24 | 0 | A | 4 | B | | | | | | | | | | |
| | 2 | 37 | 14 | 0 | A | 4 | B | 44 | 0 | A | 4 | B | 48 | 0 | A | 4 | B | | | | | | | | | | |
| | 3 | 12 | 8 | 0 | A | 4 | B | 15 | 0 | A | 4 | B | 13 | 0 | A | 4 | B | | | | | | | | | | |
| | 4 | 0 | 11.5 | 0 | A | 4 | B | 9 | 0 | A | 4 | B | 13 | 0 | A | 4 | B | | | | | | | | | | |
| | 5 | 20 | 13 | 0 | A | 4 | B | 38 | 0 | A | 4 | B | 44 | 0 | A | 4 | B | | | | | | | | | | |
| | 6 | 13 | 8 | 0 | A | 4 | B | 8 | 0 | A | 4 | B | 26 | 0 | A | 4 | B | | | | | | | | | | |
| | 7 | 0 | 13 | 0 | A | 4 | B | 8 | 0 | A | 4 | B | 9 | 0 | A | 4 | B | | | | | | | | | | |
| | 8 | 15 | 9 | 0 | A | 4 | B | 13 | 0 | A | 4 | B | 13 | 0 | A | 4 | B | | | | | | | | | | |
| Tenth Ave @ 42nd St | 1 | 19 | 17 | 0 | A | 4 | B | 48 | 0 | A | 4 | B | 53 | 0 | A | 4 | B | | | | | | | | | | |
| | 2 | 57 | 17 | 0 | A | 4 | B | 56 | 0 | A | 4 | B | 85 | 0 | A | 4 | B | | | | | | | | | | |
| | 3 | 117 | 18 | 0 | A | 4 | B | 68 | 0 | A | 4 | B | 130 | 0 | A | 4 | B | | | | | | | | | | |
| | 4 | 94 | 12 | 1 | A | 5 | B | 73 | 0 | A | 4 | B | 108 | 1 | A | 5 | B | | | | | | | | | | |
| | 5 | 42 | 8 | 0 | A | 4 | B | 26 | 0 | A | 4 | B | 44 | 0 | A | 4 | B | | | | | | | | | | |
| | 6 | 50 | 13 | 0 | A | 4 | B | 34 | 0 | A | 4 | B | 36 | 0 | A | 4 | B | | | | | | | | | | |
| | 7 | 30 | 13 | 0 | A | 4 | B | 54 | 0 | A | 4 | B | 48 | 0 | A | 4 | B | | | | | | | | | | |
| | 8 | 85 | 12.5 | 0 | A | 4 | B | 66 | 0 | A | 4 | B | 129 | 1 | A | 5 | B | | | | | | | | | | |
| Dyer @ 42nd St | 3 | 164 | 19 | 1 | A | 5 | B | 121 | 0 | A | 4 | B | 260 | 1 | A | 5 | B | | | | | | | | | | |
| | 4 | 75 | 18 | 0 | A | 4 | B | 90 | 0 | A | 4 | B | 118 | 0 | A | 4 | B | | | | | | | | | | |
| | 5 | 8 | 5.6 | 0 | A | 4 | B | 3 | 0 | A | 4 | B | 16 | 0 | A | 4 | B | | | | | | | | | | |
| | 6 | 1 | 2.1 | 0 | A | 4 | B | 5 | 0 | A | 4 | B | 4 | 0 | A | 4 | B | | | | | | | | | | |
| | 7 | 65 | 18 | 0 | A | 4 | B | 82 | 0 | A | 4 | B | 109 | 0 | A | 4 | B | | | | | | | | | | |
| | 8 | 146 | 19 | 1 | A | 5 | B | 101 | 0 | A | 4 | B | 216 | 1 | A | 5 | B | | | | | | | | | | |
| Ninth Ave @ 30th St | 1 | 201 | 14 | 1 | A | 5 | B | 42 | 0 | A | 4 | B | 50 | 0 | A | 4 | B | 28 | 0 | A | 4 | B | 84 | 0 | A | 4 | B |
| | 2 | 144 | 8 | 1 | A | 5 | B | 125 | 1 | A | 5 | B | 100 | 1 | A | 5 | B | 67 | 1 | A | 5 | B | 104 | 1 | A | 5 | B |
| | 3 | 44 | 6 | 0 | A | 4 | B | 17 | 0 | A | 4 | B | 36 | 0 | A | 4 | B | 19 | 0 | A | 4 | B | 38 | 0 | A | 4 | B |
| | 4 | 62 | 10 | 0 | A | 4 | B | 27 | 0 | A | 4 | B | 54 | 0 | A | 4 | B | 18 | 0 | A | 4 | B | 75 | 1 | A | 5 | B |
| | 5 | 69 | 13 | 0 | A | 4 | B | 86 | 0 | A | 4 | B | 77 | 0 | A | 4 | B | 49 | 0 | A | 4 | B | 73 | 0 | A | 4 | B |
| | 6 | 77 | 13 | 0 | A | 4 | B | 44 | 0 | A | 4 | B | 41 | 0 | A | 4 | B | 18 | 0 | A | 4 | B | 56 | 0 | A | 4 | B |
| | 7 | 262 | 11 | 2 | A | 6 | B | 61 | 0 | A | 4 | B | 83 | 1 | A | 5 | B | 31 | 0 | A | 4 | B | 123 | 1 | A | 5 | B |
| | 8 | 13 | 10 | 0 | A | 4 | B | 4 | 0 | A | 4 | B | 9 | 0 | A | 4 | B | 5 | 0 | A | 4 | B | 12 | 0 | A | 4 | B |
| Ninth Ave @ 31st St | 1 | 106 | 12 | 1 | A | 5 | B | 65 | 0 | A | 4 | B | 43 | 0 | A | 4 | B | 25 | 0 | A | 4 | B | 23 | 0 | A | 4 | B |
| | 2 | 83 | 10 | 1 | A | 5 | B | 12 | 0 | A | 4 | B | 70 | 0 | A | 4 | B | 35 | 0 | A | 4 | B | 109 | 1 | A | 5 | B |
| | 3 | 54 | 10 | 0 | A | 4 | B | 70 | 0 | A | 4 | B | 20 | 0 | A | 4 | B | 3 | 0 | A | 4 | B | 111 | 1 | A | 5 | B |
| | 4 | 208 | 10 | 1 | A | 5 | B | 85 | 1 | A | 5 | B | 114 | 1 | A | 5 | B | 27 | 0 | A | 4 | B | 15 | 0 | A | 4 | B |
| | 5 | 143 | 12 | 1 | A | 5 | B | 17 | 0 | A | 4 | B | 124 | 1 | A | 5 | B | 53 | 0 | A | 4 | B | 27 | 0 | A | 4 | B |
| | 6 | 29 | 12 | 0 | A | 4 | B | 74 | 0 | A | 4 | B | 32 | 0 | A | 4 | B | 27 | 0 | A | 4 | B | 22 | 0 | A | 4 | B |
| | 7 | 78 | 10 | 1 | A | 5 | B | 128 | 1 | A | 5 | B | 61 | 0 | A | 4 | B | 7 | 0 | A | 4 | B | 5 | 0 | A | 4 | B |
| | 8 | 38 | 10 | 0 | A | 4 | B | 27 | 0 | A | 4 | B | 6 | 0 | A | 4 | B | 7 | 0 | A | 4 | B | 51 | 0 | A | 4 | B |

# Appendix S.5.3

**Existing Conditions - Sidewalks Level of Service**

| | | AM | | | | | | MD | | | | | PM | | | | | SE-EVE | | | | | SE-SUN | | | | |
|---|---|---|---|---|---|---|---|---|---|---|---|---|---|---|---|---|---|---|---|---|---|---|---|---|---|---|---|
| | | Vol. Two- | Sidewalk | Average | | Platoon | | Vol. Two- | Average | | Platoon | | Vol. Two- | Average | | Platoon | | Vol. Two- | Average | | Platoon | | Vol. Two- | Average | | Platoon | |
| Intersection | Side-walk | Way | Width | p/m/f | LOS | p/m/f | LOS | Way | p/m/f | LOS | p/m/f | LOS | Way | p/m/f | LOS | p/m/f | LOS | Way | p/m/f | LOS | p/m/f | LOS | Way | p/m/f | LOS | p/m/f | LOS |
| Ninth Ave @ 33rd St | 1 | 106 | 12 | 1 | A | 5 | B | 125 | 1 | A | 5 | B | 1 | 0 | A | 4 | B | 30 | 0 | A | 4 | B | 35 | 0 | A | 4 | B |
| | 2 | 87 | 12 | 0 | A | 4 | B | 125 | 1 | A | 5 | B | 35 | 0 | A | 4 | B | 77 | 0 | A | 4 | B | 156 | 1 | A | 5 | B |
| | 3 | 140 | 10 | 1 | A | 5 | B | 217 | 1 | A | 5 | B | 30 | 0 | A | 4 | B | 23 | 0 | A | 4 | B | 70 | 0 | A | 4 | B |
| | 4 | 341 | 10 | 2 | A | 6 | B | 145 | 1 | A | 5 | B | 43 | 0 | A | 4 | B | 49 | 0 | A | 4 | B | 37 | 0 | A | 4 | B |
| | 5 | 53 | 12 | 0 | A | 4 | B | 147 | 1 | A | 5 | B | 35 | 0 | A | 4 | B | 44 | 0 | A | 4 | B | 80 | 0 | A | 4 | B |
| | 6 | 54 | 12 | 0 | A | 4 | B | 193 | 1 | A | 5 | B | 1 | 0 | A | 4 | B | 18 | 0 | A | 4 | B | 27 | 0 | A | 4 | B |
| | 7 | 297 | 10 | 2 | A | 6 | B | 68 | 0 | A | 4 | B | 10 | 0 | A | 4 | B | 63 | 0 | A | 4 | B | 21 | 0 | A | 4 | B |
| | 8 | 94 | 10 | 1 | A | 5 | B | 69 | 0 | A | 4 | B | 11 | 0 | A | 4 | B | 16 | 0 | A | 4 | B | 17 | 0 | A | 4 | B |
| Ninth Ave @ 34th St | 1 | 79 | 11 | 0 | A | 4 | B | 187 | 1 | A | 5 | B | 91 | 1 | A | 5 | B | 32 | 0 | A | 4 | B | 23 | 0 | A | 4 | B |
| | 2 | 125 | 12 | 1 | A | 5 | B | 87 | 0 | A | 4 | B | 214 | 1 | A | 5 | B | 88 | 0 | A | 4 | B | 90 | 1 | A | 5 | B |
| | 3 | 133 | 19 | 0 | A | 4 | B | 158 | 1 | A | 5 | B | 222 | 1 | A | 5 | B | 104 | 0 | A | 4 | B | 118 | 0 | A | 4 | B |
| | 4 | 185 | 19 | 1 | A | 5 | B | 252 | 1 | A | 5 | B | 299 | 1 | A | 5 | B | 134 | 0 | A | 4 | B | 173 | 1 | A | 5 | B |
| | 5 | 66 | 12 | 0 | A | 4 | B | 237 | 1 | A | 5 | B | 173 | 1 | A | 5 | B | 78 | 0 | A | 4 | B | 190 | 1 | A | 5 | B |
| | 6 | 75 | 12 | 0 | A | 4 | B | 247 | 1 | A | 5 | B | 87 | 0 | A | 4 | B | 34 | 0 | A | 4 | B | 47 | 0 | A | 4 | B |
| | 7 | 177 | 16 | 1 | A | 5 | B | 216 | 1 | A | 5 | B | 204 | 1 | A | 5 | B | 72 | 0 | A | 4 | B | 79 | 0 | A | 4 | B |
| | 8 | 115 | 15 | 1 | A | 5 | B | 200 | 1 | A | 5 | B | 139 | 1 | A | 5 | B | 50 | 0 | A | 4 | B | 46 | 0 | A | 4 | B |
| Ninth Ave @ 37th St | 1 | 64 | 12 | 0 | A | 4 | B | 49 | 0 | A | 4 | B | 81 | 0 | A | 4 | B | | | | | | | | | | |
| | 2 | 159 | 12 | 1 | A | 5 | B | 205 | 1 | A | 5 | B | 228 | 1 | A | 5 | B | | | | | | | | | | |
| | 3 | 25 | 9 | 0 | A | 4 | B | 49 | 0 | A | 4 | B | 60 | 0 | A | 4 | B | | | | | | | | | | |
| | 4 | 45 | 9 | 0 | A | 4 | B | 40 | 0 | A | 4 | B | 58 | 0 | A | 4 | B | | | | | | | | | | |
| | 5 | 173 | 10 | 1 | A | 5 | B | 156 | 1 | A | 5 | B | 244 | 2 | A | 6 | B | | | | | | | | | | |
| | 6 | 42 | 12 | 0 | A | 4 | B | 57 | 0 | A | 4 | B | 50 | 0 | A | 4 | B | | | | | | | | | | |
| | 7 | 23 | 6 | 0 | A | 4 | B | 36 | 0 | A | 4 | B | 56 | 1 | A | 5 | B | | | | | | | | | | |
| | 8 | 26 | 9 | 0 | A | 4 | B | 38 | 0 | A | 4 | B | 68 | 1 | A | 5 | B | | | | | | | | | | |
| Ninth Ave @ 38th St | 1 | 59 | 10 | 0 | A | 4 | B | 111 | 1 | A | 5 | B | 102 | 1 | A | 5 | B | | | | | | | | | | |
| | 2 | 104 | 8 | 1 | A | 5 | B | 67 | 1 | A | 5 | B | 99 | 1 | A | 5 | B | | | | | | | | | | |
| | 3 | 23 | 8 | 0 | A | 4 | B | 38 | 0 | A | 4 | B | 81 | 1 | A | 5 | B | | | | | | | | | | |
| | 4 | 33 | 8 | 0 | A | 4 | B | 23 | 0 | A | 4 | B | 21 | 0 | A | 4 | B | | | | | | | | | | |
| | 5 | 141 | 10 | 1 | A | 5 | B | 66 | 0 | A | 4 | B | 159 | 1 | A | 5 | B | | | | | | | | | | |
| | 6 | 37 | 12 | 0 | A | 4 | B | 69 | 0 | A | 4 | B | 76 | 0 | A | 4 | B | | | | | | | | | | |
| | 7 | 15 | 8 | 0 | A | 4 | B | 36 | 0 | A | 4 | B | 15 | 0 | A | 4 | B | | | | | | | | | | |
| | 8 | 5 | 8 | 0 | A | 4 | B | 19 | 0 | A | 4 | B | 30 | 0 | A | 4 | B | | | | | | | | | | |
| Ninth Ave @ 39th St | 1 | 74 | 8 | 1 | A | 5 | B | 66 | 1 | A | 5 | B | 125 | 1 | A | 5 | B | | | | | | | | | | |
| | 2 | 172 | 11 | 1 | A | 5 | B | 122 | 1 | A | 5 | B | 243 | 1 | A | 5 | B | | | | | | | | | | |
| | 3 | 24 | 9 | 0 | A | 4 | B | 40 | 0 | A | 4 | B | 39 | 0 | A | 4 | B | | | | | | | | | | |
| | 4 | 21 | 9 | 0 | A | 4 | B | 40 | 0 | A | 4 | B | 31 | 0 | A | 4 | B | | | | | | | | | | |
| | 5 | 139 | 10 | 1 | A | 5 | B | 155 | 1 | A | 5 | B | 258 | 2 | A | 6 | B | | | | | | | | | | |
| | 6 | 56 | 12 | 0 | A | 4 | B | 68 | 0 | A | 4 | B | 99 | 1 | A | 5 | B | | | | | | | | | | |
| | 7 | 9 | 9 | 0 | A | 4 | B | 4 | 0 | A | 4 | B | 11 | 0 | A | 4 | B | | | | | | | | | | |
| | 8 | 25 | 9 | 0 | A | 4 | B | 10 | 0 | A | 4 | B | 21 | 0 | A | 4 | B | | | | | | | | | | |
| Ninth Ave @ 42nd St | 1 | 154 | 13 | 1 | A | 5 | B | 242 | 1 | A | 5 | B | 304 | 2 | A | 6 | B | | | | | | | | | | |
| | 2 | 174 | 8 | 1 | A | 5 | B | 166 | 1 | A | 5 | B | 277 | 2 | A | 6 | B | | | | | | | | | | |
| | 3 | 185 | 8 | 2 | A | 6 | B | 160 | 1 | A | 5 | B | 314 | 3 | B | 7 | B | | | | | | | | | | |
| | 4 | 258 | 12 | 1 | A | 5 | B | 291 | 2 | A | 6 | B | 302 | 2 | A | 6 | B | | | | | | | | | | |
| | 5 | 246 | 7.5 | 2 | A | 6 | B | 185 | 2 | A | 6 | B | 300 | 3 | B | 7 | B | | | | | | | | | | |
| | 6 | 71 | 8 | 1 | A | 5 | B | 176 | 1 | A | 5 | B | 166 | 1 | A | 5 | B | | | | | | | | | | |
| | 7 | 116 | 13 | 1 | A | 5 | B | 111 | 1 | A | 5 | B | 136 | 1 | A | 5 | B | | | | | | | | | | |
| | 8 | 120 | 18 | 0 | A | 4 | B | 91 | 0 | A | 4 | B | 222 | 1 | A | 5 | B | | | | | | | | | | |
| Eighth Ave @ 30th St | 1 | 164 | 11 | 1 | A | 5 | B | 338 | 2 | A | 6 | B | 233 | 1 | A | 5 | B | 115 | 1 | A | 5 | B | 197 | 1 | A | 5 | B |
| | 2 | 337 | 11 | 2 | A | 6 | B | 338 | 2 | A | 6 | B | 396 | 2 | A | 6 | B | 250 | 2 | A | 6 | B | 218 | 1 | A | 5 | B |
| | 3 | 38 | 9 | 0 | A | 4 | B | 107 | 1 | A | 5 | B | 124 | 1 | A | 5 | B | 77 | 1 | A | 5 | B | 45 | 0 | A | 4 | B |
| | 4 | 61 | 11 | 0 | A | 4 | B | 72 | 0 | A | 4 | B | 37 | 0 | A | 4 | B | 34 | 0 | A | 4 | B | 8 | 0 | A | 4 | B |
| | 5 | 157 | 12 | 1 | A | 5 | B | 150 | 1 | A | 5 | B | 266 | 1 | A | 5 | B | 103 | 1 | A | 5 | B | 125 | 1 | A | 5 | B |
| | 6 | 142 | 11 | 1 | A | 5 | B | 248 | 2 | A | 6 | B | 195 | 1 | A | 5 | B | 123 | 1 | A | 5 | B | 118 | 1 | A | 5 | B |
| | 7 | 35 | 10 | 0 | A | 4 | B | 40 | 0 | A | 4 | B | 51 | 0 | A | 4 | B | 43 | 0 | A | 4 | B | 55 | 0 | A | 4 | B |
| | 8 | 63 | 10 | 0 | A | 4 | B | 60 | 0 | A | 4 | B | 62 | 0 | A | 4 | B | 45 | 0 | A | 4 | B | 82 | 1 | A | 5 | B |
| Eighth Ave @ 31st St | 1 | 130 | 12 | 1 | A | 5 | B | 160 | 1 | A | 5 | B | 214 | 1 | A | 5 | B | 129 | 1 | A | 5 | B | 126 | 1 | A | 5 | B |
| | 2 | 124 | 18 | 0 | A | 4 | B | 131 | 0 | A | 4 | B | 197 | 1 | A | 5 | B | 113 | 0 | A | 4 | B | 253 | 1 | A | 5 | B |
| | 3 | 201 | 35 | 0 | A | 4 | B | 168 | 0 | A | 4 | B | 162 | 0 | A | 4 | B | 61 | 0 | A | 4 | B | 162 | 0 | A | 4 | B |
| | 4 | 30 | 10 | 0 | A | 4 | B | 61 | 0 | A | 4 | B | 40 | 0 | A | 4 | B | 19 | 0 | A | 4 | B | 28 | 0 | A | 4 | B |
| | 5 | 122 | 12 | 1 | A | 5 | B | 186 | 1 | A | 5 | B | 147 | 1 | A | 5 | B | 201 | 1 | A | 5 | B | 182 | 1 | A | 5 | B |
| | 6 | 86 | 12 | 0 | A | 4 | B | 138 | 1 | A | 5 | B | 116 | 1 | A | 5 | B | 227 | 1 | A | 5 | B | 114 | 1 | A | 5 | B |
| | 7 | 118 | 10 | 1 | A | 5 | B | 153 | 1 | A | 5 | B | 123 | 1 | A | 5 | B | 120 | 1 | A | 5 | B | 23 | 0 | A | 4 | B |
| | 8 | 141 | 12 | 1 | A | 5 | B | 51 | 0 | A | 4 | B | 88 | 0 | A | 4 | B | 47 | 0 | A | 4 | B | 49 | 0 | A | 4 | B |
| Eighth Ave @ 33rd St | 1 | 435 | 12 | 2 | A | 6 | B | 414 | 2 | A | 6 | B | 468 | 3 | B | 7 | B | 196 | 1 | A | 5 | B | 223 | 1 | A | 5 | B |
| | 2 | 264 | 12 | 1 | A | 5 | B | 200 | 1 | A | 5 | B | 312 | 2 | A | 6 | B | 295 | 2 | A | 6 | B | 497 | 3 | B | 7 | B |
| | 3 | 306 | 10 | 2 | A | 6 | B | 175 | 1 | A | 5 | B | 255 | 2 | A | 6 | B | 105 | 1 | A | 5 | B | 116 | 1 | A | 5 | B |
| | 4 | 213 | 30 | 0 | A | 4 | B | 485 | 1 | A | 5 | B | 390 | 1 | A | 5 | B | 174 | 0 | A | 4 | B | 169 | 0 | A | 4 | B |
| | 5 | 329 | 30 | 1 | A | 5 | B | 390 | 1 | A | 5 | B | 486 | 1 | A | 5 | B | 366 | 1 | A | 5 | B | 164 | 0 | A | 4 | B |
| | 6 | 118 | 12 | 1 | A | 5 | B | 252 | 1 | A | 5 | B | 67 | 0 | A | 4 | B | 111 | 1 | A | 5 | B | 87 | 0 | A | 4 | B |
| | 7 | 189 | 7 | 2 | A | 6 | B | 464 | 4 | B | 8 | C | 319 | 3 | B | 7 | B | 112 | 1 | A | 5 | B | 98 | 1 | A | 5 | B |
| | 8 | 414 | 7 | 4 | B | 8 | C | 341 | 3 | B | 7 | B | 211 | 2 | A | 6 | B | 66 | 1 | A | 5 | B | 154 | 1 | A | 5 | B |
| Eighth Ave @ 34th St | 1 | 133 | 11 | 1 | A | 5 | B | 182 | 1 | A | 5 | B | 184 | 1 | A | 5 | B | 50 | 0 | A | 4 | B | 192 | 1 | A | 5 | B |
| | 2 | 208 | 11 | 1 | A | 5 | B | 145 | 1 | A | 5 | B | 189 | 1 | A | 5 | B | 213 | 1 | A | 5 | B | 413 | 3 | B | 7 | B |
| | 3 | 193 | 19 | 1 | A | 5 | B | 245 | 1 | A | 5 | B | 291 | 1 | A | 5 | B | 340 | 1 | A | 5 | B | 434 | 2 | A | 6 | B |
| | 4 | 151 | 19 | 1 | A | 5 | B | 157 | 1 | A | 5 | B | 184 | 1 | A | 5 | B | 175 | 1 | A | 5 | B | 326 | 1 | A | 5 | B |
| | 5 | 163 | 12 | 1 | A | 5 | B | 89 | 0 | A | 4 | B | 126 | 1 | A | 5 | B | 70 | 0 | A | 4 | B | 329 | 2 | A | 6 | B |
| | 6 | 202 | 11 | 1 | A | 5 | B | 153 | 1 | A | 5 | B | 222 | 1 | A | 5 | B | 175 | 1 | A | 5 | B | 208 | 1 | A | 5 | B |
| | 7 | 133 | 12 | 1 | A | 5 | B | 119 | 1 | A | 5 | B | 162 | 1 | A | 5 | B | 70 | 0 | A | 4 | B | 370 | 2 | A | 6 | B |
| | 8 | 246 | 18 | 1 | A | 5 | B | 170 | 1 | A | 5 | B | 258 | 1 | A | 5 | B | 137 | 1 | A | 5 | B | 197 | 1 | A | 5 | B |

# Appendix S.5.3

**Existing Conditions - Sidewalks Level of Service**

| | | AM | | | | | | MD | | | | | PM | | | | | SE-EVE | | | | | SE-SUN | | | | |
|---|---|---|---|---|---|---|---|---|---|---|---|---|---|---|---|---|---|---|---|---|---|---|---|---|---|---|---|
| | | Vol. Two- | Sidewalk | Average | | Platoon | | Vol. Two- | Average | | Platoon | | Vol. Two- | Average | | Platoon | | Vol. Two- | Average | | Platoon | | Vol. Two- | Average | | Platoon | |
| Intersection | Side-walk | Way | Width | p/m/f | LOS | p/m/f | LOS | Way | p/m/f | LOS | p/m/f | LOS | Way | p/m/f | LOS | p/m/f | LOS | Way | p/m/f | LOS | p/m/f | LOS | Way | p/m/f | LOS | p/m/f | LOS |
| Eighth Ave @ 37th St | 1 | 415 | 8 | 3 | B | 7 | B | 142 | 1 | A | 5 | B | 431 | 4 | B | 8 | C | | | | | | | | | | |
| | 2 | 402 | 12 | 2 | A | 6 | B | 384 | 2 | A | 6 | B | 699 | 4 | B | 8 | C | | | | | | | | | | |
| | 3 | 129 | 9 | 1 | A | 5 | B | 94 | 1 | A | 5 | B | 120 | 1 | A | 5 | B | | | | | | | | | | |
| | 4 | 64 | 6 | 1 | A | 5 | B | 157 | 2 | A | 6 | B | 62 | 1 | A | 5 | B | | | | | | | | | | |
| | 5 | 321 | 9 | 2 | A | 6 | B | 107 | 1 | A | 5 | B | 444 | 3 | B | 7 | B | | | | | | | | | | |
| | 6 | 373 | 9 | 3 | B | 7 | B | 225 | 2 | A | 6 | B | 546 | 4 | B | 8 | C | | | | | | | | | | |
| | 7 | 57 | 5 | 1 | A | 5 | B | 170 | 2 | A | 6 | B | 78 | 1 | A | 5 | B | | | | | | | | | | |
| | 8 | 56 | 10 | 0 | A | 4 | B | 258 | 2 | A | 6 | B | 66 | 0 | A | 4 | B | | | | | | | | | | |
| Eighth Ave @ 38th St | 1 | 223 | 8 | 2 | A | 6 | B | 179 | 1 | A | 5 | B | 485 | 4 | B | 8 | C | | | | | | | | | | |
| | 2 | 290 | 10 | 2 | A | 6 | B | 107 | 1 | A | 5 | B | 383 | 3 | B | 7 | B | | | | | | | | | | |
| | 3 | 141 | 5 | 2 | A | 6 | B | 34 | 0 | A | 4 | B | 95 | 1 | A | 5 | B | | | | | | | | | | |
| | 4 | 60 | 9 | 0 | A | 4 | B | 109 | 1 | A | 5 | B | 40 | 0 | A | 4 | B | | | | | | | | | | |
| | 5 | 155 | 8 | 1 | A | 5 | B | 172 | 1 | A | 5 | B | 643 | 5 | B | 9 | C | | | | | | | | | | |
| | 6 | 262 | 10 | 2 | A | 6 | B | 231 | 2 | A | 6 | B | 413 | 3 | B | 7 | B | | | | | | | | | | |
| | 7 | 41 | 8 | 0 | A | 4 | B | 79 | 1 | A | 5 | B | 0 | 0 | A | 4 | B | | | | | | | | | | |
| | 8 | 80 | 8 | 1 | A | 5 | B | 61 | 1 | A | 5 | B | 41 | 0 | A | 4 | B | | | | | | | | | | |
| Eighth Ave @ 39th St | 1 | 561 | 12 | 3 | B | 7 | B | 516 | 3 | B | 7 | B | 814 | 5 | B | 9 | C | | | | | | | | | | |
| | 2 | 1280 | 11 | 8 | C | 12 | D | 596 | 4 | B | 8 | C | 1132 | 7 | B | 11 | D | | | | | | | | | | |
| | 3 | 256 | 8 | 2 | A | 6 | B | 263 | 2 | A | 6 | B | 123 | 1 | A | 5 | B | | | | | | | | | | |
| | 4 | 153 | 9 | 1 | A | 5 | B | 295 | 2 | A | 6 | B | 187 | 1 | A | 5 | B | | | | | | | | | | |
| | 5 | 530 | 12 | 3 | B | 7 | B | 464 | 3 | B | 7 | B | 770 | 4 | B | 8 | C | | | | | | | | | | |
| | 6 | 703 | 12 | 4 | B | 8 | C | 649 | 4 | B | 8 | C | 924 | 5 | B | 9 | C | | | | | | | | | | |
| | 7 | 107 | 9 | 1 | A | 5 | B | 154 | 1 | A | 5 | B | 71 | 1 | A | 5 | B | | | | | | | | | | |
| | 8 | 100 | 9 | 1 | A | 5 | B | 131 | 1 | A | 5 | B | 112 | 1 | A | 5 | B | | | | | | | | | | |
| Eighth Ave @ 42nd St | 1 | 682 | 7 | 6 | B | 10 | C | 336 | 3 | B | 7 | B | 1534 | 15 | D | 19 | E | | | | | | | | | | |
| | 2 | 537 | 16 | 2 | A | 6 | B | 429 | 2 | A | 6 | B | 682 | 3 | B | 7 | B | | | | | | | | | | |
| | 3 | 238 | 15 | 1 | A | 5 | B | 381 | 2 | A | 6 | B | 309 | 1 | A | 5 | B | | | | | | | | | | |
| | 4 | 985 | 14 | 5 | B | 9 | C | 608 | 3 | B | 7 | B | 1433 | 7 | B | 11 | D | | | | | | | | | | |
| | 5 | 618 | 7 | 6 | B | 10 | C | 445 | 4 | B | 8 | C | 994 | 9 | C | 13 | D | | | | | | | | | | |
| | 6 | 793 | 12 | 4 | B | 8 | C | 596 | 3 | B | 7 | B | 1658 | 9 | C | 13 | D | | | | | | | | | | |
| | 7 | 347 | 12 | 2 | A | 6 | B | 392 | 2 | A | 6 | B | 662 | 4 | B | 8 | C | | | | | | | | | | |
| | 8 | 530 | 12 | 3 | B | 7 | B | 376 | 2 | A | 6 | B | 718 | 4 | B | 8 | C | | | | | | | | | | |
| Seventh Ave @ 31st St | 1 | 541 | 19 | 2 | A | 6 | B | 502 | 2 | A | 6 | B | 693 | 2 | A | 6 | B | | | | | | | | | | |
| | 2 | 705 | 19 | 2 | A | 6 | B | 388 | 1 | A | 5 | B | 489 | 2 | A | 6 | B | | | | | | | | | | |
| | 3 | 367 | 10 | 2 | A | 6 | B | 159 | 1 | A | 5 | B | 510 | 3 | B | 7 | B | | | | | | | | | | |
| | 4 | 271 | 10 | 2 | A | 6 | B | 258 | 2 | A | 6 | B | 540 | 4 | B | 8 | C | | | | | | | | | | |
| | 5 | 420 | 17 | 2 | A | 6 | B | 251 | 1 | A | 5 | B | 601 | 2 | A | 6 | B | | | | | | | | | | |
| | 6 | 765 | 16 | 3 | B | 7 | B | 446 | 2 | A | 6 | B | 486 | 2 | A | 6 | B | | | | | | | | | | |
| | 7 | 151 | 10 | 1 | A | 5 | B | 72 | 0 | A | 4 | B | 394 | 3 | B | 7 | B | | | | | | | | | | |
| | 8 | 119 | 15 | 1 | A | 5 | B | 140 | 1 | A | 5 | B | 333 | 1 | A | 5 | B | | | | | | | | | | |
| Seventh Ave @ 33rd St | 1 | 553 | 16 | 2 | A | 6 | B | 515 | 2 | A | 6 | B | 573 | 2 | A | 6 | B | | | | | | | | | | |
| | 2 | 470 | 15 | 2 | A | 6 | B | 460 | 2 | A | 6 | B | 461 | 2 | A | 6 | B | | | | | | | | | | |
| | 3 | 294 | 7 | 3 | B | 7 | B | 247 | 2 | A | 6 | B | 448 | 4 | B | 8 | C | | | | | | | | | | |
| | 4 | 491 | 10 | 3 | B | 7 | B | 445 | 3 | B | 7 | B | 534 | 4 | B | 8 | C | | | | | | | | | | |
| | 5 | 479 | 15 | 2 | A | 6 | B | 470 | 2 | A | 6 | B | 414 | 2 | A | 6 | B | | | | | | | | | | |
| | 6 | 719 | 37 | 1 | A | 5 | B | 496 | 1 | A | 5 | B | 670 | 1 | A | 5 | B | | | | | | | | | | |
| | 7 | 264 | 37 | 0 | A | 4 | B | 334 | 1 | A | 5 | B | 396 | 1 | A | 5 | B | | | | | | | | | | |
| | 8 | 287 | 9 | 2 | A | 6 | B | 289 | 2 | A | 6 | B | 430 | 3 | B | 7 | B | | | | | | | | | | |
| Seventh Ave @ 34th St | 1 | 520 | 17 | 2 | A | 6 | B | 379 | 1 | A | 5 | B | 959 | 4 | B | 8 | C | | | | | | | | | | |
| | 2 | 595 | 17 | 2 | A | 6 | B | 248 | 1 | A | 5 | B | 958 | 4 | B | 8 | C | | | | | | | | | | |
| | 3 | 291 | 20 | 1 | A | 5 | B | 352 | 1 | A | 5 | B | 877 | 3 | B | 7 | B | | | | | | | | | | |
| | 4 | 710 | 20 | 2 | A | 6 | B | 288 | 1 | A | 5 | B | 693 | 2 | A | 6 | B | | | | | | | | | | |
| | 5 | 264 | 17 | 1 | A | 5 | B | 215 | 1 | A | 5 | B | 702 | 3 | B | 7 | B | | | | | | | | | | |
| | 6 | 347 | 17 | 1 | A | 5 | B | 209 | 1 | A | 5 | B | 719 | 3 | B | 7 | B | | | | | | | | | | |
| | 7 | 1010 | 20 | 3 | B | 7 | B | 214 | 1 | A | 5 | B | 774 | 3 | B | 7 | B | | | | | | | | | | |
| | 8 | 190 | 20 | 1 | A | 5 | B | 237 | 1 | A | 5 | B | 938 | 3 | B | 7 | B | | | | | | | | | | |
| Sixth Ave @ 33rd St | 1 | 342 | 26 | 1 | A | 5 | B | 593 | 2 | A | 6 | B | 1067 | 3 | B | 7 | B | | | | | | | | | | |
| | 2 | 384 | 25 | 1 | A | 5 | B | 384 | 1 | A | 5 | B | 572 | 2 | A | 6 | B | | | | | | | | | | |
| | 3 | 256 | 10 | 2 | A | 6 | B | 255 | 2 | A | 6 | B | 566 | 4 | B | 8 | C | | | | | | | | | | |
| | 4 | 370 | 10 | 2 | A | 6 | B | 420 | 3 | B | 7 | B | 680 | 5 | B | 9 | C | | | | | | | | | | |
| | 5 | 260 | 24 | 1 | A | 5 | B | 415 | 1 | A | 5 | B | 457 | 1 | A | 5 | B | | | | | | | | | | |
| | 6 | 528 | 17 | 2 | A | 6 | B | 513 | 2 | A | 6 | B | 1142 | 4 | B | 8 | C | | | | | | | | | | |
| | 7 | 421 | 10 | 3 | B | 7 | B | 311 | 2 | A | 6 | B | 775 | 5 | B | 9 | C | | | | | | | | | | |
| | 8 | 219 | 10 | 1 | A | 5 | B | 183 | 1 | A | 5 | B | 411 | 3 | B | 7 | B | | | | | | | | | | |
| Sixth Ave @ 34th St | 2 | 808 | 10 | 5 | B | 9 | C | 1621 | 11 | D | 15 | D | 1446 | 10 | C | 14 | D | 286 | 2 | A | 6 | B | 727 | 5 | B | 9 | C |
| | 3 | 454 | 20 | 2 | A | 6 | B | 815 | 3 | B | 7 | B | 1357 | 5 | B | 9 | C | 604 | 2 | A | 6 | B | 459 | 2 | A | 6 | B |
| | 4 | 463 | 18 | 2 | A | 6 | B | 498 | 2 | A | 6 | B | 975 | 4 | B | 8 | C | 467 | 2 | A | 6 | B | 647 | 2 | A | 6 | B |
| | 5 | 705 | 14 | 3 | B | 7 | B | 1577 | 8 | C | 12 | D | 925 | 4 | B | 8 | C | 390 | 2 | A | 6 | B | 377 | 2 | A | 6 | B |
| Broadway @ 34th St | 1 | 852 | 25 | 2 | A | 6 | B | 1397 | 4 | B | 8 | C | 1727 | 5 | B | 9 | C | 454 | 1 | A | 5 | B | 779 | 2 | A | 6 | B |
| | 6 | 852 | 25 | 2 | A | 6 | B | 1578 | 4 | B | 8 | C | 1690 | 5 | B | 9 | C | 564 | 2 | A | 6 | B | 1018 | 3 | B | 7 | B |
| | 7 | 608 | 18 | 2 | A | 6 | B | 930 | 3 | B | 7 | B | 1641 | 6 | B | 10 | C | 793 | 3 | B | 7 | B | 960 | 4 | B | 8 | C |
| | 8 | 485 | 18 | 2 | A | 6 | B | 663 | 2 | A | 6 | B | 1802 | 7 | B | 11 | D | 633 | 2 | A | 6 | B | 876 | 3 | B | 7 | B |

# Appendix S.5.3

**Pedestrian Improvement Analysis - Sidewalks Level of Service**

**2010 Future Conditions (AM)**

| Intersection | Walkway Location | 2010 Future without the Proposed Action | | | | | 2010 Future with the Proposed Action | | | | | | 2010 Future with the Proposed Action (Improvement) | | | | | |
|---|---|---|---|---|---|---|---|---|---|---|---|---|---|---|---|---|---|---|
| | | Effective Walkway width | Actual walkway width | Sidewalk Volumes | Platoon Flow Rate (ped/min/ft) | Platoon Level of Service | Effective Walkway width | Actual walkway width | Sidewalk Volumes | Platoon Flow Rate (ped/min/ft) | Platoon Level of Service | Impact? | Proposed Effective Walkwa | Proposed Actual walkway width | Sidewalk Volumes | Platoon Flow Rate (ped/min/ft) | Platoon Level of Service | Still Impact? |
| ***Twelfth Ave @ 30th St*** | 1 | 0 | 0 | 0 | N/A | N/A | 0 | 0 | 0 | N/A | N/A | | | | 0 | N/A | N/A | |
| | 2 | 9 | 11 | 0 | 4 | B | 9 | 11 | 0 | 4 | B | | | | 0 | 4 | B | |
| | 3 | 10 | 13 | 0 | 4 | B | 10 | 13 | 0 | 4 | B | | | | 0 | 4 | B | |
| | 4 | 10 | 13 | 2 | 4 | B | 10 | 13 | 2 | 4 | B | | | | 2 | 4 | B | |
| | 5 | 12 | 15 | 4 | 4 | B | 12 | 15 | 4 | 4 | B | | | | 4 | 4 | B | |
| | 6 | 0 | 0 | 0 | N/A | N/A | 0 | 0 | 0 | N/A | N/A | | | | 0 | N/A | N/A | |
| | 7 | 0 | 0 | 0 | N/A | N/A | 0 | 0 | 0 | N/A | N/A | | | | 0 | N/A | N/A | |
| | 8 | 0 | 0 | 0 | N/A | N/A | 0 | 0 | 0 | N/A | N/A | | | | 0 | N/A | N/A | |
| ***Twelfth Ave @ 34th St*** | 1 | 0 | 0 | 0 | N/A | N/A | 0 | 0 | 0 | N/A | N/A | | | | 0 | N/A | N/A | |
| | 2 | 9 | 12 | 0 | 4 | B | 9 | 12 | 3 | 4 | B | | | | 3 | 4 | B | |
| | 3 | 15 | 18 | 13 | 4 | B | 15 | 18 | 14 | 4 | B | | | | 14 | 4 | B | |
| | 4 | 15 | 18 | 47 | 4 | B | 15 | 18 | 52 | 4 | B | | | | 52 | 4 | B | |
| | 5 | 9 | 12 | 0 | 4 | B | 9 | 12 | 0 | 4 | B | | | | 0 | 4 | B | |
| | 6 | 0 | 0 | 0 | N/A | N/A | 0 | 0 | 0 | N/A | N/A | | | | 0 | N/A | N/A | |
| | 7 | 0 | 0 | 0 | N/A | N/A | 0 | 0 | 0 | N/A | N/A | | | | 0 | N/A | N/A | |
| | 8 | 0 | 0 | 0 | N/A | N/A | 0 | 0 | 0 | N/A | N/A | | | | 0 | N/A | N/A | |
| ***Twelfth Ave @ 39th St*** | 1 | 0 | 0 | 0 | N/A | N/A | 0 | 0 | 0 | N/A | N/A | | | | 0 | N/A | N/A | |
| | 2 | 10 | 13 | 0 | 4 | B | 10 | 13 | 0 | 4 | B | | | | 0 | 4 | B | |
| | 3 | 10 | 13 | 0 | 4 | B | 0 | 0 | 0 | N/A | N/A | | | | 0 | N/A | N/A | |
| | 4 | 10 | 13 | 27 | 4 | B | 0 | 0 | 0 | N/A | N/A | | | | 0 | N/A | N/A | |
| | 5 | 15 | 18 | 3 | 4 | B | 15 | 18 | 6 | 4 | B | | | | 6 | 4 | B | |
| | 6 | 0 | 0 | 0 | N/A | N/A | 0 | 0 | 0 | N/A | N/A | | | | 0 | N/A | N/A | |
| | 7 | 0 | 0 | 0 | N/A | N/A | 0 | 0 | 0 | N/A | N/A | | | | 0 | N/A | N/A | |
| | 8 | 0 | 0 | 0 | N/A | N/A | 0 | 0 | 0 | N/A | N/A | | | | 0 | N/A | N/A | |
| ***Twelfth Ave @ 40th St*** | 1 | 0 | 0 | 0 | N/A | N/A | 0 | 0 | 0 | N/A | N/A | | | | 0 | N/A | N/A | |
| | 2 | 10 | 13 | 0 | 4 | B | 10 | 13 | 1 | 4 | B | | | | 1 | 4 | B | |
| | 3 | 9 | 11 | 0 | 4 | B | 0 | 0 | 1 | N/A | N/A | | | | 0 | N/A | N/A | |
| | 4 | 9 | 12 | 0 | 4 | B | 0 | 0 | 0 | N/A | N/A | | | | 0 | N/A | N/A | |
| | 5 | 11 | 14 | 0 | 4 | B | 11 | 14 | 0 | 4 | B | | | | 0 | 4 | B | |
| | 6 | 0 | 0 | 0 | N/A | N/A | 0 | 0 | 0 | N/A | N/A | | | | 0 | N/A | N/A | |
| | 7 | 0 | 0 | 0 | N/A | N/A | 0 | 0 | 0 | N/A | N/A | | | | 0 | N/A | N/A | |
| | 8 | 0 | 0 | 0 | N/A | N/A | 0 | 0 | 0 | N/A | N/A | | | | 0 | N/A | N/A | |
| ***Twelfth Ave @ 42nd St*** | 1 | 0 | 0 | 0 | N/A | N/A | 0 | 0 | 0 | N/A | N/A | | | | 0 | N/A | N/A | |
| | 2 | 17 | 20 | 14 | 4 | B | 17 | 20 | 14 | 4 | B | | | | 14 | 4 | B | |
| | 3 | 12 | 15 | 59 | 4 | B | 12 | 15 | 64 | 4 | B | | | | 64 | 4 | B | |
| | 4 | 23 | 26 | 70 | 4 | B | 23 | 26 | 70 | 4 | B | | | | 70 | 4 | B | |
| | 5 | 17 | 20 | 5 | 4 | B | 17 | 20 | 5 | 4 | B | | | | 5 | 4 | B | |
| | 6 | 0 | 0 | 0 | N/A | N/A | 0 | 0 | 0 | N/A | N/A | | | | 0 | N/A | N/A | |
| | 7 | 0 | 0 | 0 | N/A | N/A | 0 | 0 | 0 | N/A | N/A | | | | 0 | N/A | N/A | |
| | 8 | 0 | 0 | 0 | N/A | N/A | 0 | 0 | 0 | N/A | N/A | | | | 0 | N/A | N/A | |
| ***Eleventh Ave @ 29th St*** | 1 | 12 | 15 | 5 | 4 | B | 12 | 15 | 35 | 4 | B | | | | 35 | 4 | B | |
| | 2 | 12 | 15 | 16 | 4 | B | 12 | 15 | 60 | 4 | B | | | | 60 | 4 | B | |
| | 3 | 10 | 13 | 6 | 4 | B | 10 | 13 | 54 | 4 | B | | | | 54 | 4 | B | |
| | 4 | 10 | 13 | 10 | 4 | B | 10 | 13 | 13 | 4 | B | | | | 13 | 4 | B | |
| | 5 | 12 | 15 | 24 | 4 | B | 12 | 15 | 38 | 4 | B | | | | 38 | 4 | B | |
| | 6 | 12 | 15 | 3 | 4 | B | 12 | 15 | 9 | 4 | B | | | | 9 | 4 | B | |
| | 7 | 10 | 13 | 0 | 4 | B | 10 | 13 | 0 | 4 | B | | | | 0 | 4 | B | |
| | 8 | 10 | 13 | 0 | 4 | B | 10 | 13 | 0 | 4 | B | | | | 0 | 4 | B | |

# Appendix S.5.3

**Pedestrian Improvement Analysis - Sidewalks Level of Service**

**2010 Future Conditions (AM)**

| Intersection | Walkway Location | 2010 Future without the Proposed Action | | | | | 2010 Future with the Proposed Action | | | | | | 2010 Future with the Proposed Action (Improvement) | | | | | |
|---|---|---|---|---|---|---|---|---|---|---|---|---|---|---|---|---|---|---|
| | | Effective Walkway width | Actual walkway width | Sidewalk Volumes | Platoon Flow Rate (ped/min/ft) | Platoon Level of Service | Effective Walkway width | Actual walkway width | Sidewalk Volumes | Platoon Flow Rate (ped/min/ft) | Platoon Level of Service | Impact? | Proposed Effective Walkwa | Proposed Actual walkway width | Sidewalk Volumes | Platoon Flow Rate (ped/min/ft) | Platoon Level of Service | Still Impact? |
| ***Eleventh Ave @ 30th St*** | 1 | 12 | 15 | 4 | 4 | B | 12 | 15 | 34 | 4 | B | | | | 34 | 4 | B | |
| | 2 | 12 | 15 | 17 | 4 | B | 12 | 15 | 42 | 4 | B | | | | 42 | 4 | B | |
| | 3 | 10 | 13 | 12 | 4 | B | 10 | 13 | 25 | 4 | B | | | | 25 | 4 | B | |
| | 4 | 10 | 13 | 5 | 4 | B | 10 | 13 | 12 | 4 | B | | | | 12 | 4 | B | |
| | 5 | 12 | 15 | 20 | 4 | B | 12 | 15 | 62 | 4 | B | | | | 62 | 4 | B | |
| | 6 | 12 | 15 | 7 | 4 | B | 12 | 15 | 39 | 4 | B | | | | 39 | 4 | B | |
| | 7 | 10 | 13 | 1 | 4 | B | 10 | 13 | 1 | 4 | B | | | | 1 | 4 | B | |
| | 8 | 10 | 13 | 2 | 4 | B | 10 | 13 | 14 | 4 | B | | | | 14 | 4 | B | |
| ***Eleventh Ave @ 33rd St*** | 1 | 12 | 15 | 9 | 4 | B | 12 | 15 | 63 | 4 | B | | | | 63 | 4 | B | |
| | 2 | 12 | 15 | 24 | 4 | B | 12 | 15 | 60 | 4 | B | | | | 60 | 4 | B | |
| | 3 | 10 | 13 | 14 | 4 | B | 10 | 13 | 40 | 4 | B | | | | 40 | 4 | B | |
| | 4 | 10 | 13 | 2 | 4 | B | 10 | 13 | 28 | 4 | B | | | | 28 | 4 | B | |
| | 5 | 12 | 15 | 12 | 4 | B | 12 | 15 | 37 | 4 | B | | | | 37 | 4 | B | |
| | 6 | 12 | 15 | 6 | 4 | B | 12 | 15 | 25 | 4 | B | | | | 25 | 4 | B | |
| | 7 | 10 | 13 | 5 | 4 | B | 0 | 0 | 0 | N/A | N/A | | | | 0 | N/A | N/A | |
| | 8 | 10 | 13 | 1 | 4 | B | 0 | 0 | 0 | N/A | N/A | | | | 0 | N/A | N/A | |
| ***Eleventh Ave @ 34th St*** | 1 | 13 | 15 | 5 | 4 | B | 13 | 15 | 95 | 4 | B | | | | 95 | 4 | B | |
| | 2 | 9 | 12 | 16 | 4 | B | 14 | 17 | 108 | 5 | B | | | | 108 | 5 | B | |
| | 3 | 17 | 20 | 34 | 4 | B | 26 | 30 | 105 | 4 | B | | | | 105 | 4 | B | |
| | 4 | 17 | 20 | 22 | 4 | B | 17 | 20 | 114 | 4 | B | | | | 114 | 4 | B | |
| | 5 | 12 | 15 | 35 | 4 | B | 12 | 15 | 75 | 4 | B | | | | 75 | 4 | B | |
| | 6 | 12 | 15 | 0 | 4 | B | 12 | 15 | 66 | 4 | B | | | | 66 | 4 | B | |
| | 7 | 17 | 20 | 52 | 4 | B | 17 | 20 | 57 | 4 | B | | | | 57 | 4 | B | |
| | 8 | 17 | 20 | 25 | 4 | B | 17 | 20 | 26 | 4 | B | | | | 26 | 4 | B | |
| ***Eleventh Ave @ 35th St*** | 1 | 16 | 19 | 7 | 4 | B | 16 | 19 | 26 | 4 | B | | | | 26 | 4 | B | |
| | 2 | 14 | 15 | 15 | 4 | B | 14 | 15 | 315 | 6 | B | | | | 315 | 6 | B | |
| | 3 | 12 | 14 | 0 | 4 | B | 12 | 14 | 5 | 4 | B | | | | 5 | 4 | B | |
| | 4 | 12 | 14 | 2 | 4 | B | 17 | 19 | 27 | 4 | B | | | | 27 | 4 | B | |
| | 5 | 8 | 11 | 10 | 4 | B | 13 | 16 | 338 | 6 | B | | | | 338 | 6 | B | |
| | 6 | 12 | 15 | 7 | 4 | B | 12 | 15 | 96 | 5 | B | | | | 96 | 5 | B | |
| | 7 | 0 | 0 | 0 | N/A | N/A | 0 | 0 | 0 | N/A | N/A | | | | 0 | N/A | N/A | |
| | 8 | 0 | 0 | 0 | N/A | N/A | 0 | 0 | 0 | N/A | N/A | | | | 0 | N/A | N/A | |
| ***Eleventh Ave @ 36th St*** | 1 | 12 | 15 | 6 | 4 | B | 12 | 15 | 26 | 4 | B | | | | 26 | 4 | B | |
| | 2 | 7 | 9 | 10 | 4 | B | 7 | 9 | 52 | 4 | B | | | | 52 | 4 | B | |
| | 3 | 10 | 13 | 0 | 4 | B | 10 | 13 | 4 | 4 | B | | | | 4 | 4 | B | |
| | 4 | 8 | 10 | 5 | 4 | B | 8 | 10 | 9 | 4 | B | | | | 9 | 4 | B | |
| | 5 | 12 | 15 | 9 | 4 | B | 12 | 15 | 924 | 9 | C | | | | 924 | 9 | C | |
| | 6 | 13 | 17 | 9 | 4 | B | 13 | 17 | 27 | 4 | B | | | | 27 | 4 | B | |
| | 7 | 0 | 0 | 0 | N/A | N/A | 0 | 0 | 0 | N/A | N/A | | | | 0 | N/A | N/A | |
| | 8 | 0 | 0 | 0 | N/A | N/A | 0 | 0 | 0 | N/A | N/A | | | | 0 | N/A | N/A | |
| ***Eleventh Ave @ 37th St*** | 1 | 12 | 15 | 1 | 4 | B | 12 | 15 | 26 | 4 | B | | | | 26 | 4 | B | |
| | 2 | 7 | 10 | 8 | 4 | B | 7 | 10 | 25 | 4 | B | | | | 25 | 4 | B | |
| | 3 | 9 | 12 | 0 | 4 | B | 9 | 12 | 29 | 4 | B | | | | 29 | 4 | B | |
| | 4 | 9 | 12 | 1 | 4 | B | 9 | 12 | 5 | 4 | B | | | | 5 | 4 | B | |
| | 5 | 7 | 10 | 8 | 4 | B | 7 | 10 | 51 | 4 | B | | | | 51 | 4 | B | |
| | 6 | 12 | 15 | 0 | 4 | B | 12 | 15 | 21 | 4 | B | | | | 21 | 4 | B | |
| | 7 | 0 | 0 | 0 | N/A | N/A | 0 | 0 | 0 | N/A | N/A | | | | 0 | N/A | N/A | |
| | 8 | 0 | 0 | 0 | N/A | N/A | 0 | 0 | 0 | N/A | N/A | | | | 0 | N/A | N/A | |

# Appendix S.5.3

**Pedestrian Improvement Analysis - Sidewalks Level of Service**

**2010 Future Conditions (AM)**

| Intersection | Walkway Location | 2010 Future without the Proposed Action | | | | | 2010 Future with the Proposed Action | | | | | | 2010 Future with the Proposed Action (Improvement) | | | | | |
|---|---|---|---|---|---|---|---|---|---|---|---|---|---|---|---|---|---|---|
| | | Effective Walkway width | Actual walkway width | Sidewalk Volumes | Platoon Flow Rate (ped/min/ft) | Platoon Level of Service | Effective Walkway width | Actual walkway width | Sidewalk Volumes | Platoon Flow Rate (ped/min/ft) | Platoon Level of Service | Impact? | Proposed Effective Walkwa | Proposed Actual walkway width | Sidewalk Volumes | Platoon Flow Rate (ped/min/ft) | Platoon Level of Service | Still Impact? |
| ***Eleventh Ave @ 38th St*** | 1 | 12 | 15 | 3 | 4 | B | 12 | 15 | 33 | 4 | B | | | | 33 | 4 | B | |
| | 2 | 7 | 10 | 0 | 4 | B | 7 | 10 | 4 | 4 | B | | | | 4 | 4 | B | |
| | 3 | 8 | 11 | 4 | 4 | B | 8 | 11 | 21 | 4 | B | | | | 21 | 4 | B | |
| | 4 | 8 | 11 | 1 | 4 | B | 8 | 11 | 5 | 4 | B | | | | 5 | 4 | B | |
| | 5 | 7 | 10 | 7 | 4 | B | 7 | 10 | 23 | 4 | B | | | | 23 | 4 | B | |
| | 6 | 12 | 15 | 0 | 4 | B | 12 | 15 | 25 | 4 | B | | | | 25 | 4 | B | |
| | 7 | 0 | 0 | 0 | N/A | N/A | 0 | 0 | 0 | N/A | N/A | | | | 0 | N/A | N/A | |
| | 8 | 0 | 0 | 0 | N/A | N/A | 0 | 0 | 0 | N/A | N/A | | | | 0 | N/A | N/A | |
| ***Eleventh Ave @ 39th St*** | 1 | 11 | 14 | 80 | 4 | B | 11 | 14 | 113 | 5 | B | | | | 113 | 5 | B | |
| | 2 | 7 | 10 | 3 | 4 | B | 7 | 10 | 7 | 4 | B | | | | 7 | 4 | B | |
| | 3 | 9 | 12 | 0 | 4 | B | 9 | 12 | 4 | 4 | B | | | | 4 | 4 | B | |
| | 4 | 8 | 11 | 31 | 4 | B | 8 | 11 | 34 | 4 | B | | | | 34 | 4 | B | |
| | 5 | 7 | 10 | 8 | 4 | B | 7 | 10 | 12 | 4 | B | | | | 12 | 4 | B | |
| | 6 | 12 | 15 | 41 | 4 | B | 12 | 15 | 71 | 4 | B | | | | 71 | 4 | B | |
| | 7 | 10 | 13 | 27 | 4 | B | 0 | 0 | 0 | N/A | N/A | | | | 0 | N/A | N/A | |
| | 8 | 12 | 15 | 1 | 4 | B | 0 | 0 | 0 | N/A | N/A | | | | 0 | N/A | N/A | |
| ***Eleventh Ave @ 40th St*** | 1 | 12 | 15 | 28 | 4 | B | 12 | 15 | 69 | 4 | B | | | | 69 | 4 | B | |
| | 2 | 7 | 10 | 5 | 4 | B | 7 | 10 | 8 | 4 | B | | | | 8 | 4 | B | |
| | 3 | 10 | 13 | 3 | 4 | B | 10 | 13 | 16 | 4 | B | | | | 16 | 4 | B | |
| | 4 | 10 | 13 | 1 | 4 | B | 10 | 13 | 1 | 4 | B | | | | 1 | 4 | B | |
| | 5 | 7 | 10 | 0 | 4 | B | 7 | 10 | 3 | 4 | B | | | | 3 | 4 | B | |
| | 6 | 12 | 15 | 15 | 4 | B | 12 | 15 | 48 | 4 | B | | | | 48 | 4 | B | |
| | 7 | 10 | 13 | 1 | 4 | B | 0 | 0 | 0 | N/A | N/A | | | | 0 | N/A | N/A | |
| | 8 | 10 | 13 | 11 | 4 | B | 0 | 0 | 0 | N/A | N/A | | | | 0 | N/A | N/A | |
| ***Eleventh Ave @ 42nd St*** | 1 | 13 | 16 | 44 | 4 | B | 13 | 16 | 60 | 4 | B | | | | 60 | 4 | B | |
| | 2 | 13 | 16 | 27 | 4 | B | 13 | 16 | 37 | 4 | B | | | | 37 | 4 | B | |
| | 3 | 12 | 15 | 111 | 5 | B | 12 | 15 | 167 | 5 | B | | | | 167 | 5 | B | |
| | 4 | 12 | 15 | 96 | 5 | B | 12 | 15 | 146 | 5 | B | | | | 146 | 5 | B | |
| | 5 | 12 | 16 | 9 | 4 | B | 12 | 16 | 9 | 4 | B | | | | 9 | 4 | B | |
| | 6 | 12 | 15 | 71 | 4 | B | 12 | 15 | 72 | 4 | B | | | | 72 | 4 | B | |
| | 7 | 12 | 16 | 68 | 4 | B | 12 | 16 | 68 | 4 | B | | | | 68 | 4 | B | |
| | 8 | 12 | 16 | 67 | 4 | B | 12 | 16 | 129 | 5 | B | | | | 129 | 5 | B | |
| ***Tenth Ave @ 29th St*** | 1 | 12 | 15 | 39 | 4 | B | 12 | 15 | 47 | 4 | B | | | | 47 | 4 | B | |
| | 2 | 12 | 15 | 20 | 4 | B | 12 | 15 | 24 | 4 | B | | | | 24 | 4 | B | |
| | 3 | 10 | 13 | 24 | 4 | B | 10 | 13 | 21 | 4 | B | | | | 21 | 4 | B | |
| | 4 | 10 | 13 | 22 | 4 | B | 10 | 13 | 25 | 4 | B | | | | 25 | 4 | B | |
| | 5 | 12 | 15 | 20 | 4 | B | 12 | 15 | 17 | 4 | B | | | | 17 | 4 | B | |
| | 6 | 12 | 15 | 58 | 4 | B | 12 | 15 | 69 | 4 | B | | | | 69 | 4 | B | |
| | 7 | 10 | 13 | 26 | 4 | B | 10 | 13 | 27 | 4 | B | | | | 27 | 4 | B | |
| | 8 | 10 | 13 | 17 | 4 | B | 10 | 13 | 17 | 4 | B | | | | 17 | 4 | B | |
| ***Tenth Ave @ 30th St*** | 1 | 13 | 16 | 30 | 4 | B | 13 | 16 | 41 | 4 | B | | | | 41 | 4 | B | |
| | 2 | 12 | 15 | 24 | 4 | B | 12 | 15 | 32 | 4 | B | | | | 32 | 4 | B | |
| | 3 | 10 | 13 | 18 | 4 | B | 10 | 13 | 25 | 4 | B | | | | 25 | 4 | B | |
| | 4 | 12 | 15 | 20 | 4 | B | 12 | 15 | 24 | 4 | B | | | | 24 | 4 | B | |
| | 5 | 12 | 15 | 31 | 4 | B | 12 | 15 | 32 | 4 | B | | | | 32 | 4 | B | |
| | 6 | 12 | 15 | 42 | 4 | B | 12 | 15 | 57 | 4 | B | | | | 57 | 4 | B | |
| | 7 | 11 | 14 | 16 | 4 | B | 11 | 14 | 20 | 4 | B | | | | 20 | 4 | B | |
| | 8 | 11 | 14 | 15 | 4 | B | 11 | 14 | 34 | 4 | B | | | | 34 | 4 | B | |

# Appendix S.5.3

**Pedestrian Improvement Analysis - Sidewalks Level of Service**

**2010 Future Conditions (AM)**

| Intersection | Walkway Location | 2010 Future without the Proposed Action | | | | | 2010 Future with the Proposed Action | | | | | | 2010 Future with the Proposed Action (Improvement) | | | | | |
|---|---|---|---|---|---|---|---|---|---|---|---|---|---|---|---|---|---|---|
| | | Effective Walkway width | Actual walkway width | Sidewalk Volumes | Platoon Flow Rate (ped/min/ft) | Platoon Level of Service | Effective Walkway width | Actual walkway width | Sidewalk Volumes | Platoon Flow Rate (ped/min/ft) | Platoon Level of Service | Impact? | Proposed Effective Walkwa | Proposed Actual walkway width | Sidewalk Volumes | Platoon Flow Rate (ped/min/ft) | Platoon Level of Service | Still Impact? |
| ***Tenth Ave @ 31st St*** | 1 | 12 | 15 | 25 | 4 | B | 12 | 15 | 39 | 4 | B | | | | 39 | 4 | B | |
| | 2 | 12 | 15 | 39 | 4 | B | 12 | 15 | 56 | 4 | B | | | | 56 | 4 | B | |
| | 3 | 11 | 13 | 26 | 4 | B | 11 | 13 | 41 | 4 | B | | | | 41 | 4 | B | |
| | 4 | 11 | 13 | 11 | 4 | B | 11 | 13 | 18 | 4 | B | | | | 18 | 4 | B | |
| | 5 | 12 | 15 | 38 | 4 | B | 12 | 15 | 42 | 4 | B | | | | 42 | 4 | B | |
| | 6 | 12 | 15 | 29 | 4 | B | 12 | 15 | 44 | 4 | B | | | | 44 | 4 | B | |
| | 7 | 0 | 0 | 0 | N/A | N/A | 0 | 0 | 0 | N/A | N/A | | | | 0 | N/A | N/A | |
| | 8 | 0 | 0 | 0 | N/A | N/A | 0 | 0 | 0 | N/A | N/A | | | | 0 | N/A | N/A | |
| ***Tenth Ave @ 33rd St*** | 1 | 12 | 15 | 57 | 4 | B | 12 | 15 | 77 | 4 | B | | | | 77 | 4 | B | |
| | 2 | 12 | 15 | 40 | 4 | B | 12 | 15 | 58 | 4 | B | | | | 58 | 4 | B | |
| | 3 | 10 | 13 | 40 | 4 | B | 10 | 13 | 111 | 5 | B | | | | 111 | 5 | B | |
| | 4 | 10 | 13 | 48 | 4 | B | 10 | 13 | 130 | 5 | B | | | | 130 | 5 | B | |
| | 5 | 12 | 15 | 25 | 4 | B | 12 | 15 | 40 | 4 | B | | | | 40 | 4 | B | |
| | 6 | 12 | 15 | 28 | 4 | B | 12 | 15 | 64 | 4 | B | | | | 64 | 4 | B | |
| | 7 | 10 | 13 | 38 | 4 | B | 10 | 13 | 104 | 5 | B | | | | 104 | 5 | B | |
| | 8 | 10 | 13 | 28 | 4 | B | 10 | 13 | 104 | 5 | B | | | | 104 | 5 | B | |
| ***Tenth Ave @ 34th St*** | 1 | 12 | 15 | 30 | 4 | B | 12 | 15 | 57 | 4 | B | | | | 57 | 4 | B | |
| | 2 | 12 | 15 | 33 | 4 | B | 12 | 15 | 41 | 4 | B | | | | 41 | 4 | B | |
| | 3 | 17 | 20 | 101 | 4 | B | 17 | 20 | 204 | 5 | B | | | | 204 | 5 | B | |
| | 4 | 17 | 20 | 154 | 5 | B | 17 | 20 | 260 | 5 | B | | | | 260 | 5 | B | |
| | 5 | 12 | 15 | 54 | 4 | B | 12 | 15 | 70 | 4 | B | | | | 70 | 4 | B | |
| | 6 | 12 | 15 | 27 | 4 | B | 12 | 15 | 49 | 4 | B | | | | 49 | 4 | B | |
| | 7 | 17 | 20 | 90 | 4 | B | 17 | 20 | 220 | 5 | B | | | | 220 | 5 | B | |
| | 8 | 17 | 20 | 117 | 4 | B | 17 | 20 | 263 | 5 | B | | | | 263 | 5 | B | |
| ***Tenth Ave @ 35th St*** | 1 | 13 | 16 | 15 | 4 | B | 13 | 16 | 45 | 4 | B | | | | 45 | 4 | B | |
| | 2 | 13 | 15 | 8 | 4 | B | 13 | 15 | 18 | 4 | B | | | | 18 | 4 | B | |
| | 3 | 12 | 15 | 46 | 4 | B | 12 | 15 | 142 | 5 | B | | | | 142 | 5 | B | |
| | 4 | 7 | 9 | 23 | 4 | B | 7 | 9 | 153 | 5 | B | | | | 153 | 5 | B | |
| | 5 | 13 | 15 | 3 | 4 | B | 13 | 15 | 12 | 4 | B | | | | 12 | 4 | B | |
| | 6 | 11 | 15 | 25 | 4 | B | 11 | 15 | 52 | 4 | B | | | | 52 | 4 | B | |
| | 7 | 10 | 13 | 29 | 4 | B | 10 | 13 | 194 | 5 | B | | | | 194 | 5 | B | |
| | 8 | 12 | 14 | 33 | 4 | B | 12 | 14 | 111 | 5 | B | | | | 111 | 5 | B | |
| ***Tenth Ave @ 36th St*** | 1 | 12 | 15 | 10 | 4 | B | 12 | 15 | 35 | 4 | B | | | | 35 | 4 | B | |
| | 2 | 10 | 16 | 13 | 4 | B | 10 | 16 | 19 | 4 | B | | | | 19 | 4 | B | |
| | 3 | 9 | 12 | 15 | 4 | B | 9 | 12 | 20 | 4 | B | | | | 20 | 4 | B | |
| | 4 | 9 | 12 | 18 | 4 | B | 9 | 12 | 23 | 4 | B | | | | 23 | 4 | B | |
| | 5 | 12 | 15 | 16 | 4 | B | 12 | 15 | 27 | 4 | B | | | | 27 | 4 | B | |
| | 6 | 12 | 15 | 11 | 4 | B | 12 | 15 | 40 | 4 | B | | | | 40 | 4 | B | |
| | 7 | 9 | 12 | 12 | 4 | B | 9 | 12 | 16 | 4 | B | | | | 16 | 4 | B | |
| | 8 | 10 | 12 | 15 | 4 | B | 10 | 12 | 19 | 4 | B | | | | 19 | 4 | B | |
| ***Tenth Ave @ 37th St*** | 1 | 5 | 15 | 11 | 4 | B | 5 | 15 | 21 | 4 | B | | | | 21 | 4 | B | |
| | 2 | 5 | 15 | 29 | 4 | B | 5 | 15 | 47 | 5 | B | | | | 47 | 5 | B | |
| | 3 | 9 | 12 | 23 | 4 | B | 9 | 12 | 31 | 4 | B | | | | 31 | 4 | B | |
| | 4 | 9 | 12 | 33 | 4 | B | 9 | 12 | 41 | 4 | B | | | | 41 | 4 | B | |
| | 5 | 12 | 15 | 20 | 4 | B | 12 | 15 | 26 | 4 | B | | | | 26 | 4 | B | |
| | 6 | 12 | 15 | 7 | 4 | B | 12 | 15 | 30 | 4 | B | | | | 30 | 4 | B | |
| | 7 | 9 | 12 | 16 | 4 | B | 9 | 12 | 20 | 4 | B | | | | 20 | 4 | B | |
| | 8 | 9 | 12 | 15 | 4 | B | 9 | 12 | 19 | 4 | B | | | | 19 | 4 | B | |

# Appendix S.5.3

**Pedestrian Improvement Analysis - Sidewalks Level of Service**

**2010 Future Conditions (AM)**

| Intersection | Walkway Location | 2010 Future without the Proposed Action | | | | | 2010 Future with the Proposed Action | | | | | | 2010 Future with the Proposed Action (Improvement) | | | | | |
|---|---|---|---|---|---|---|---|---|---|---|---|---|---|---|---|---|---|---|
| | | Effective Walkway width | Actual walkway width | Sidewalk Volumes | Platoon Flow Rate (ped/min/ft) | Platoon Level of Service | Effective Walkway width | Actual walkway width | Sidewalk Volumes | Platoon Flow Rate (ped/min/ft) | Platoon Level of Service | Impact? | Proposed Effective Walkwa | Proposed Actual walkway width | Sidewalk Volumes | Platoon Flow Rate (ped/min/ft) | Platoon Level of Service | Still Impact? |
| ***Tenth Ave @ 38th St*** | 1 | 12 | 15 | 20 | 4 | B | 12 | 15 | 27 | 4 | B | | | | 27 | 4 | B | |
| | 2 | 12 | 15 | 20 | 4 | B | 12 | 15 | 29 | 4 | B | | | | 29 | 4 | B | |
| | 3 | 9 | 12 | 15 | 4 | B | 9 | 12 | 21 | 4 | B | | | | 21 | 4 | B | |
| | 4 | 9 | 12 | 4 | 4 | B | 9 | 12 | 10 | 4 | B | | | | 10 | 4 | B | |
| | 5 | 12 | 15 | 11 | 4 | B | 12 | 15 | 16 | 4 | B | | | | 16 | 4 | B | |
| | 6 | 12 | 15 | 15 | 4 | B | 12 | 15 | 26 | 4 | B | | | | 26 | 4 | B | |
| | 7 | 9 | 12 | 5 | 4 | B | 9 | 12 | 8 | 4 | B | | | | 8 | 4 | B | |
| | 8 | 9 | 12 | 13 | 4 | B | 9 | 12 | 16 | 4 | B | | | | 16 | 4 | B | |
| ***Tenth Ave @ 39th St*** | 1 | 12 | 15 | 11 | 4 | B | 12 | 15 | 14 | 4 | B | | | | 14 | 4 | B | |
| | 2 | 12 | 15 | 18 | 4 | B | 12 | 15 | 29 | 4 | B | | | | 29 | 4 | B | |
| | 3 | 9 | 12 | 15 | 4 | B | 9 | 12 | 21 | 4 | B | | | | 21 | 4 | B | |
| | 4 | 9 | 12 | 23 | 4 | B | 9 | 12 | 30 | 4 | B | | | | 30 | 4 | B | |
| | 5 | 12 | 15 | 26 | 4 | B | 12 | 15 | 34 | 4 | B | | | | 34 | 4 | B | |
| | 6 | 12 | 15 | 13 | 4 | B | 12 | 15 | 20 | 4 | B | | | | 20 | 4 | B | |
| | 7 | 10 | 13 | 15 | 4 | B | 10 | 13 | 18 | 4 | B | | | | 18 | 4 | B | |
| | 8 | 7 | 10 | 15 | 4 | B | 7 | 10 | 18 | 4 | B | | | | 18 | 4 | B | |
| ***Tenth Ave @ 40th St*** | 1 | 12 | 15 | 7 | 4 | B | 12 | 15 | 11 | 4 | B | | | | 11 | 4 | B | |
| | 2 | 12 | 15 | 39 | 4 | B | 12 | 15 | 61 | 4 | B | | | | 61 | 4 | B | |
| | 3 | 9 | 12 | 13 | 4 | B | 9 | 12 | 28 | 4 | B | | | | 28 | 4 | B | |
| | 4 | 9 | 12 | 9 | 4 | B | 9 | 12 | 17 | 4 | B | | | | 17 | 4 | B | |
| | 5 | 12 | 15 | 36 | 4 | B | 12 | 15 | 46 | 4 | B | | | | 46 | 4 | B | |
| | 6 | 12 | 15 | 9 | 4 | B | 12 | 15 | 12 | 4 | B | | | | 12 | 4 | B | |
| | 7 | 10 | 13 | 6 | 4 | B | 10 | 13 | 6 | 4 | B | | | | 6 | 4 | B | |
| | 8 | 10 | 13 | 8 | 4 | B | 10 | 13 | 23 | 4 | B | | | | 23 | 4 | B | |
| ***Tenth Ave @ 41st St*** | 1 | 12 | 15 | 43 | 4 | B | 12 | 15 | 44 | 4 | B | | | | 44 | 4 | B | |
| | 2 | 14 | 16 | 61 | 4 | B | 14 | 16 | 112 | 5 | B | | | | 112 | 5 | B | |
| | 3 | 8 | 10 | 51 | 4 | B | 8 | 10 | 70 | 5 | B | | | | 70 | 5 | B | |
| | 4 | 12 | 14 | 6 | 4 | B | 12 | 14 | 19 | 4 | B | | | | 19 | 4 | B | |
| | 5 | 13 | 16 | 28 | 4 | B | 13 | 16 | 50 | 4 | B | | | | 50 | 4 | B | |
| | 6 | 8 | 10 | 18 | 4 | B | 8 | 10 | 23 | 4 | B | | | | 23 | 4 | B | |
| | 7 | 13 | 17 | 0 | 4 | B | 13 | 17 | 8 | 4 | B | | | | 8 | 4 | B | |
| | 8 | 9 | 12 | 46 | 4 | B | 9 | 12 | 65 | 4 | B | | | | 65 | 4 | B | |
| ***Tenth Ave @ 42nd St*** | 1 | 17 | 20 | 24 | 4 | B | 17 | 20 | 27 | 4 | B | | | | 27 | 4 | B | |
| | 2 | 17 | 22 | 65 | 4 | B | 17 | 22 | 77 | 4 | B | | | | 77 | 4 | B | |
| | 3 | 18 | 21 | 242 | 5 | B | 18 | 21 | 377 | 5 | B | | | | 377 | 5 | B | |
| | 4 | 12 | 20 | 162 | 5 | B | 12 | 20 | 467 | 7 | B | | | | 467 | 7 | B | |
| | 5 | 8 | 16 | 52 | 4 | B | 8 | 16 | 69 | 5 | B | | | | 69 | 5 | B | |
| | 6 | 13 | 16 | 56 | 4 | B | 13 | 16 | 56 | 4 | B | | | | 56 | 4 | B | |
| | 7 | 13 | 15 | 92 | 4 | B | 13 | 15 | 143 | 5 | B | | | | 143 | 5 | B | |
| | 8 | 13 | 15 | 202 | 5 | B | 13 | 15 | 256 | 5 | B | | | | 256 | 5 | B | |
| ***Dyer @ 42nd St*** | 1 | 0 | 0 | 0 | N/A | N/A | 0 | 0 | 0 | N/A | N/A | | | | 0 | N/A | N/A | |
| | 2 | 0 | 0 | 0 | N/A | N/A | 0 | 0 | 0 | N/A | N/A | | | | 0 | N/A | N/A | |
| | 3 | 19 | 21 | 170 | 5 | B | 19 | 21 | 170 | 5 | B | | | | 170 | 5 | B | |
| | 4 | 18 | 20 | 84 | 4 | B | 18 | 20 | 102 | 4 | B | | | | 102 | 4 | B | |
| | 5 | 6 | 6 | 8 | 4 | B | 6 | 6 | 8 | 4 | B | | | | 8 | 4 | B | |
| | 6 | 2 | 4 | 1 | 4 | B | 2 | 4 | 1 | 4 | B | | | | 1 | 4 | B | |
| | 7 | 18 | 20 | 73 | 4 | B | 18 | 20 | 91 | 4 | B | | | | 91 | 4 | B | |
| | 8 | 19 | 21 | 151 | 5 | B | 19 | 21 | 151 | 5 | B | | | | 151 | 5 | B | |

# Appendix S.5.3

**Pedestrian Improvement Analysis - Sidewalks Level of Service**

**2010 Future Conditions (AM)**

| Intersection | Walkway Location | 2010 Future without the Proposed Action | | | | | 2010 Future with the Proposed Action | | | | | | 2010 Future with the Proposed Action (Improvement) | | | | | |
|---|---|---|---|---|---|---|---|---|---|---|---|---|---|---|---|---|---|---|
| | | Effective Walkway width | Actual walkway width | Sidewalk Volumes | Platoon Flow Rate (ped/min/ft) | Platoon Level of Service | Effective Walkway width | Actual walkway width | Sidewalk Volumes | Platoon Flow Rate (ped/min/ft) | Platoon Level of Service | Impact? | Proposed Effective Walkwa | Proposed Actual walkway width | Sidewalk Volumes | Platoon Flow Rate (ped/min/ft) | Platoon Level of Service | Still Impact? |
| ***Ninth Ave @ 30th St*** | 1 | 14 | 16 | 234 | 5 | B | 14 | 16 | 234 | 5 | B | | | | 234 | 5 | B | |
| | 2 | 8 | 15 | 193 | 6 | B | 8 | 15 | 194 | 6 | B | | | | 194 | 6 | B | |
| | 3 | 6 | 13 | 52 | 5 | B | 6 | 13 | 56 | 5 | B | | | | 56 | 5 | B | |
| | 4 | 10 | 13 | 70 | 4 | B | 10 | 13 | 74 | 4 | B | | | | 74 | 4 | B | |
| | 5 | 13 | 16 | 97 | 4 | B | 13 | 16 | 97 | 4 | B | | | | 97 | 4 | B | |
| | 6 | 13 | 16 | 114 | 5 | B | 13 | 16 | 114 | 5 | B | | | | 114 | 5 | B | |
| | 7 | 11 | 14 | 282 | 6 | B | 11 | 14 | 284 | 6 | B | | | | 284 | 6 | B | |
| | 8 | 10 | 12 | 32 | 4 | B | 10 | 12 | 38 | 4 | B | | | | 38 | 4 | B | |
| ***Ninth Ave @ 31st St*** | 1 | 12 | 15 | 122 | 5 | B | 12 | 15 | 134 | 5 | B | | | | 134 | 5 | B | |
| | 2 | 10 | 13 | 90 | 5 | B | 10 | 13 | 93 | 5 | B | | | | 93 | 5 | B | |
| | 3 | 10 | 13 | 147 | 5 | B | 10 | 13 | 262 | 6 | B | | | | 262 | 6 | B | |
| | 4 | 10 | 13 | 218 | 5 | B | 10 | 13 | 225 | 6 | B | | | | 225 | 6 | B | |
| | 5 | 12 | 15 | 194 | 5 | B | 12 | 15 | 196 | 5 | B | | | | 196 | 5 | B | |
| | 6 | 12 | 15 | 56 | 4 | B | 12 | 15 | 59 | 4 | B | | | | 59 | 4 | B | |
| | 7 | 10 | 13 | 83 | 5 | B | 10 | 13 | 89 | 5 | B | | | | 89 | 5 | B | |
| | 8 | 10 | 13 | 58 | 4 | B | 10 | 13 | 68 | 4 | B | | | | 68 | 4 | B | |
| ***Ninth Ave @ 33rd St*** | 1 | 12 | 15 | 190 | 5 | B | 12 | 15 | 213 | 5 | B | | | | 213 | 5 | B | |
| | 2 | 12 | 15 | 165 | 5 | B | 12 | 15 | 170 | 5 | B | | | | 170 | 5 | B | |
| | 3 | 10 | 13 | 148 | 5 | B | 10 | 13 | 276 | 6 | B | | | | 276 | 6 | B | |
| | 4 | 10 | 13 | 494 | 7 | B | 10 | 13 | 606 | 8 | C | | | | 606 | 8 | C | |
| | 5 | 12 | 15 | 59 | 4 | B | 12 | 15 | 64 | 4 | B | | | | 64 | 4 | B | |
| | 6 | 12 | 15 | 99 | 5 | B | 12 | 15 | 101 | 5 | B | | | | 101 | 5 | B | |
| | 7 | 10 | 13 | 384 | 7 | B | 10 | 13 | 597 | 8 | C | | | | 597 | 8 | C | |
| | 8 | 10 | 13 | 113 | 5 | B | 10 | 13 | 183 | 5 | B | | | | 183 | 5 | B | |
| ***Ninth Ave @ 34th St*** | 1 | 11 | 15 | 143 | 5 | B | 11 | 15 | 157 | 5 | B | | | | 157 | 5 | B | |
| | 2 | 12 | 15 | 170 | 5 | B | 12 | 15 | 173 | 5 | B | | | | 173 | 5 | B | |
| | 3 | 19 | 23 | 237 | 5 | B | 19 | 23 | 334 | 5 | B | | | | 334 | 5 | B | |
| | 4 | 19 | 23 | 225 | 5 | B | 19 | 23 | 320 | 5 | B | | | | 320 | 5 | B | |
| | 5 | 12 | 15 | 142 | 5 | B | 12 | 15 | 162 | 5 | B | | | | 162 | 5 | B | |
| | 6 | 12 | 15 | 156 | 5 | B | 12 | 15 | 163 | 5 | B | | | | 163 | 5 | B | |
| | 7 | 16 | 20 | 205 | 5 | B | 16 | 20 | 310 | 5 | B | | | | 310 | 5 | B | |
| | 8 | 15 | 20 | 145 | 5 | B | 15 | 20 | 244 | 5 | B | | | | 244 | 5 | B | |
| ***Ninth Ave @ 37th St*** | 1 | 12 | 15 | 280 | 6 | B | 12 | 15 | 285 | 6 | B | | | | 285 | 6 | B | |
| | 2 | 12 | 15 | 170 | 5 | B | 12 | 15 | 171 | 5 | B | | | | 171 | 5 | B | |
| | 3 | 9 | 12 | 91 | 5 | B | 9 | 12 | 97 | 5 | B | | | | 97 | 5 | B | |
| | 4 | 9 | 12 | 49 | 4 | B | 9 | 12 | 55 | 4 | B | | | | 55 | 4 | B | |
| | 5 | 10 | 15 | 190 | 5 | B | 10 | 15 | 197 | 5 | B | | | | 197 | 5 | B | |
| | 6 | 12 | 15 | 257 | 5 | B | 12 | 15 | 261 | 5 | B | | | | 261 | 5 | B | |
| | 7 | 6 | 12 | 27 | 4 | B | 6 | 12 | 34 | 4 | B | | | | 34 | 4 | B | |
| | 8 | 9 | 12 | 31 | 4 | B | 9 | 12 | 37 | 4 | B | | | | 37 | 4 | B | |
| ***Ninth Ave @ 38th St*** | 1 | 10 | 15 | 65 | 4 | B | 10 | 15 | 63 | 4 | B | | | | 63 | 4 | B | |
| | 2 | 8 | 15 | 115 | 5 | B | 8 | 15 | 120 | 5 | B | | | | 120 | 5 | B | |
| | 3 | 8 | 11 | 25 | 4 | B | 8 | 11 | 40 | 4 | B | | | | 40 | 4 | B | |
| | 4 | 8 | 11 | 35 | 4 | B | 8 | 11 | 46 | 4 | B | | | | 46 | 4 | B | |
| | 5 | 10 | 15 | 149 | 5 | B | 10 | 15 | 154 | 5 | B | | | | 154 | 5 | B | |
| | 6 | 12 | 15 | 42 | 4 | B | 12 | 15 | 61 | 4 | B | | | | 61 | 4 | B | |
| | 7 | 8 | 11 | 18 | 4 | B | 8 | 11 | 23 | 4 | B | | | | 23 | 4 | B | |
| | 8 | 8 | 11 | 8 | 4 | B | 8 | 11 | 12 | 4 | B | | | | 12 | 4 | B | |

# Appendix S.5.3

**Pedestrian Improvement Analysis - Sidewalks Level of Service**

**2010 Future Conditions (AM)**

| Intersection | Walkway Location | 2010 Future without the Proposed Action | | | | | 2010 Future with the Proposed Action | | | | | | 2010 Future with the Proposed Action (Improvement) | | | | | |
|---|---|---|---|---|---|---|---|---|---|---|---|---|---|---|---|---|---|---|
| | | Effective Walkway width | Actual walkway width | Sidewalk Volumes | Platoon Flow Rate (ped/min/ft) | Platoon Level of Service | Effective Walkway width | Actual walkway width | Sidewalk Volumes | Platoon Flow Rate (ped/min/ft) | Platoon Level of Service | Impact? | Proposed Effective Walkwa | Proposed Actual walkway width | Sidewalk Volumes | Platoon Flow Rate (ped/min/ft) | Platoon Level of Service | Still Impact? |
| ***Ninth Ave @ 39th St*** | 1 | 8 | 15 | 83 | 5 | B | 8 | 15 | 84 | 5 | B | | | | 84 | 5 | B | |
| | 2 | 11 | 15 | 193 | 5 | B | 11 | 15 | 199 | 5 | B | | | | 199 | 5 | B | |
| | 3 | 9 | 12 | 45 | 4 | B | 9 | 12 | 47 | 4 | B | | | | 47 | 4 | B | |
| | 4 | 9 | 12 | 55 | 4 | B | 9 | 12 | 66 | 4 | B | | | | 66 | 4 | B | |
| | 5 | 10 | 15 | 152 | 5 | B | 10 | 15 | 158 | 5 | B | | | | 158 | 5 | B | |
| | 6 | 12 | 15 | 92 | 5 | B | 12 | 15 | 83 | 4 | B | | | | 83 | 4 | B | |
| | 7 | 9 | 12 | 25 | 4 | B | 9 | 12 | 30 | 4 | B | | | | 30 | 4 | B | |
| | 8 | 9 | 12 | 41 | 4 | B | 9 | 12 | 46 | 4 | B | | | | 46 | 4 | B | |
| ***Ninth Ave @ 42nd St*** | 1 | 13 | 16 | 178 | 5 | B | 13 | 16 | 187 | 5 | B | | | | 187 | 5 | B | |
| | 2 | 8 | 10 | 203 | 6 | B | 8 | 10 | 205 | 6 | B | | | | 205 | 6 | B | |
| | 3 | 8 | 11 | 314 | 7 | B | 8 | 11 | 448 | 8 | C | | | | 448 | 8 | C | |
| | 4 | 12 | 19 | 333 | 6 | B | 12 | 19 | 558 | 7 | B | | | | 558 | 7 | B | |
| | 5 | 8 | 14 | 273 | 6 | B | 8 | 14 | 276 | 6 | B | | | | 276 | 6 | B | |
| | 6 | 8 | 15 | 79 | 5 | B | 8 | 15 | 78 | 5 | B | | | | 78 | 5 | B | |
| | 7 | 13 | 20 | 200 | 5 | B | 13 | 20 | 540 | 7 | B | | | | 540 | 7 | B | |
| | 8 | 18 | 21 | 246 | 5 | B | 18 | 21 | 378 | 5 | B | | | | 378 | 5 | B | |
| ***Eighth Ave @ 30th St*** | 1 | 11 | 14 | 184 | 5 | B | 11 | 14 | 184 | 5 | B | | | | 184 | 5 | B | |
| | 2 | 11 | 15 | 353 | 6 | B | 11 | 15 | 355 | 6 | B | | | | 355 | 6 | B | |
| | 3 | 9 | 13 | 46 | 4 | B | 9 | 13 | 50 | 4 | B | | | | 50 | 4 | B | |
| | 4 | 11 | 14 | 70 | 4 | B | 11 | 14 | 75 | 4 | B | | | | 75 | 4 | B | |
| | 5 | 12 | 15 | 167 | 5 | B | 12 | 15 | 168 | 5 | B | | | | 168 | 5 | B | |
| | 6 | 11 | 14 | 156 | 5 | B | 11 | 14 | 157 | 5 | B | | | | 157 | 5 | B | |
| | 7 | 10 | 14 | 41 | 4 | B | 10 | 14 | 44 | 4 | B | | | | 44 | 4 | B | |
| | 8 | 10 | 13 | 71 | 4 | B | 10 | 13 | 77 | 5 | B | | | | 77 | 5 | B | |
| ***Eighth Ave @ 31st St*** | 1 | 12 | 16 | 189 | 5 | B | 12 | 16 | 189 | 5 | B | | | | 189 | 5 | B | |
| | 2 | 18 | 24 | 134 | 4 | B | 18 | 24 | 135 | 5 | B | | | | 135 | 5 | B | |
| | 3 | 35 | 49 | 332 | 5 | B | 35 | 49 | 432 | 5 | B | | | | 432 | 5 | B | |
| | 4 | 10 | 14 | 37 | 4 | B | 10 | 14 | 41 | 4 | B | | | | 41 | 4 | B | |
| | 5 | 12 | 15 | 132 | 5 | B | 12 | 15 | 134 | 5 | B | | | | 134 | 5 | B | |
| | 6 | 12 | 15 | 104 | 5 | B | 12 | 15 | 105 | 5 | B | | | | 105 | 5 | B | |
| | 7 | 10 | 13 | 124 | 5 | B | 10 | 13 | 130 | 5 | B | | | | 130 | 5 | B | |
| | 8 | 21 | 24 | 241 | 5 | B | 21 | 24 | 249 | 5 | B | | | | 249 | 5 | B | |
| ***Eighth Ave @ 33rd St*** | 1 | 12 | 15 | 736 | 8 | C | 12 | 15 | 765 | 8 | C | | | | 765 | 8 | C | |
| | 2 | 12 | 19 | 313 | 6 | B | 12 | 19 | 320 | 6 | B | | | | 320 | 6 | B | |
| | 3 | 10 | 17 | 428 | 7 | B | 10 | 17 | 479 | 7 | B | | | | 479 | 7 | B | |
| | 4 | 30 | 43 | 483 | 5 | B | 30 | 43 | 488 | 5 | B | | | | 488 | 5 | B | |
| | 5 | 30 | 43 | 352 | 5 | B | 30 | 43 | 373 | 5 | B | | | | 373 | 5 | B | |
| | 6 | 12 | 16 | 329 | 6 | B | 12 | 16 | 330 | 6 | B | | | | 330 | 6 | B | |
| | 7 | 13 | 24 | 461 | 6 | B | 13 | 24 | 689 | 8 | C | | | | 689 | 8 | C | |
| | 8 | 7 | 14 | 432 | 8 | C | 7 | 14 | 460 | 8 | C | | | | 460 | 8 | C | |
| ***Eighth Ave @ 34th St*** | 1 | 11 | 15 | 218 | 5 | B | 11 | 15 | 243 | 5 | B | | | | 243 | 5 | B | |
| | 2 | 11 | 15 | 233 | 5 | B | 11 | 15 | 239 | 5 | B | | | | 239 | 5 | B | |
| | 3 | 19 | 22 | 270 | 5 | B | 19 | 22 | 331 | 5 | B | | | | 331 | 5 | B | |
| | 4 | 19 | 22 | 215 | 5 | B | 19 | 22 | 261 | 5 | B | | | | 261 | 5 | B | |
| | 5 | 12 | 15 | 209 | 5 | B | 12 | 15 | 254 | 5 | B | | | | 254 | 5 | B | |
| | 6 | 11 | 15 | 369 | 6 | B | 11 | 15 | 373 | 6 | B | | | | 373 | 6 | B | |
| | 7 | 12 | 22 | 172 | 5 | B | 12 | 22 | 285 | 6 | B | | | | 285 | 6 | B | |
| | 8 | 18 | 22 | 305 | 5 | B | 18 | 22 | 397 | 5 | B | | | | 397 | 5 | B | |

# Appendix S.5.3

**Pedestrian Improvement Analysis - Sidewalks Level of Service**

**2010 Future Conditions (AM)**

| Intersection | Walkway Location | 2010 Future without the Proposed Action | | | | | 2010 Future with the Proposed Action | | | | | | 2010 Future with the Proposed Action (Improvement) | | | | | |
|---|---|---|---|---|---|---|---|---|---|---|---|---|---|---|---|---|---|---|
| | | Effective Walkway width | Actual walkway width | Sidewalk Volumes | Platoon Flow Rate (ped/min/ft) | Platoon Level of Service | Effective Walkway width | Actual walkway width | Sidewalk Volumes | Platoon Flow Rate (ped/min/ft) | Platoon Level of Service | Impact? | Proposed Effective Walkwa | Proposed Actual walkway width | Sidewalk Volumes | Platoon Flow Rate (ped/min/ft) | Platoon Level of Service | Still Impact? |
| ***Eighth Ave @ 37th St*** | 1 | 8 | 15 | 435 | 8 | C | 8 | 15 | 443 | 8 | C | | | | 443 | 8 | C | |
| | 2 | 12 | 15 | 422 | 6 | B | 12 | 15 | 423 | 6 | B | | | | 423 | 6 | B | |
| | 3 | 9 | 12 | 136 | 5 | B | 9 | 12 | 140 | 5 | B | | | | 140 | 5 | B | |
| | 4 | 6 | 12 | 78 | 5 | B | 6 | 12 | 83 | 5 | B | | | | 83 | 5 | B | |
| | 5 | 9 | 15 | 345 | 7 | B | 9 | 15 | 348 | 7 | B | | | | 348 | 7 | B | |
| | 6 | 9 | 15 | 406 | 7 | B | 9 | 15 | 408 | 7 | B | | | | 408 | 7 | B | |
| | 7 | 5 | 12 | 72 | 5 | B | 5 | 12 | 78 | 5 | B | | | | 78 | 5 | B | |
| | 8 | 10 | 13 | 60 | 4 | B | 10 | 13 | 65 | 4 | B | | | | 65 | 4 | B | |
| ***Eighth Ave @ 38th St*** | 1 | 8 | 15 | 238 | 6 | B | 8 | 15 | 250 | 6 | B | | | | 250 | 6 | B | |
| | 2 | 10 | 15 | 307 | 6 | B | 10 | 15 | 313 | 6 | B | | | | 313 | 6 | B | |
| | 3 | 5 | 12 | 146 | 6 | B | 5 | 12 | 156 | 6 | B | | | | 156 | 6 | B | |
| | 4 | 9 | 12 | 62 | 4 | B | 9 | 12 | 68 | 5 | B | | | | 68 | 5 | B | |
| | 5 | 8 | 15 | 165 | 5 | B | 8 | 15 | 167 | 5 | B | | | | 167 | 5 | B | |
| | 6 | 10 | 15 | 277 | 6 | B | 10 | 15 | 279 | 6 | B | | | | 279 | 6 | B | |
| | 7 | 8 | 11 | 45 | 4 | B | 8 | 11 | 55 | 4 | B | | | | 55 | 4 | B | |
| | 8 | 8 | 11 | 85 | 5 | B | 8 | 11 | 99 | 5 | B | | | | 99 | 5 | B | |
| ***Eighth Ave @ 39th St*** | 1 | 12 | 15 | 593 | 7 | B | 12 | 15 | 604 | 7 | B | | | | 604 | 7 | B | |
| | 2 | 11 | 15 | 1349 | 12 | D | 11 | 15 | 1356 | 12 | D | | | | 1356 | 12 | D | |
| | 3 | 8 | 12 | 284 | 6 | B | 8 | 12 | 290 | 6 | B | | | | 290 | 6 | B | |
| | 4 | 9 | 12 | 176 | 5 | B | 9 | 12 | 183 | 5 | B | | | | 183 | 5 | B | |
| | 5 | 12 | 15 | 557 | 7 | B | 12 | 15 | 564 | 7 | B | | | | 564 | 7 | B | |
| | 6 | 12 | 15 | 736 | 8 | C | 12 | 15 | 742 | 8 | C | | | | 742 | 8 | C | |
| | 7 | 9 | 12 | 144 | 5 | B | 9 | 12 | 153 | 5 | B | | | | 153 | 5 | B | |
| | 8 | 9 | 12 | 124 | 5 | B | 9 | 12 | 126 | 5 | B | | | | 126 | 5 | B | |
| ***Eighth Ave @ 42nd St*** | 1 | 7 | 15 | 764 | 11 | D | 7 | 15 | 766 | 11 | D | | | | 766 | 11 | D | |
| | 2 | 16 | 16 | 597 | 6 | B | 16 | 16 | 599 | 6 | B | | | | 599 | 6 | B | |
| | 3 | 15 | 23 | 393 | 6 | B | 15 | 23 | 474 | 6 | B | | | | 474 | 6 | B | |
| | 4 | 14 | 16 | 1288 | 10 | C | 14 | 16 | 1405 | 11 | D | | | | 1405 | 11 | D | |
| | 5 | 7 | 12 | 690 | 11 | D | 7 | 12 | 691 | 11 | D | | | | 691 | 11 | D | |
| | 6 | 12 | 29 | 836 | 9 | C | 12 | 29 | 837 | 9 | C | | | | 837 | 9 | C | |
| | 7 | 12 | 34 | 447 | 6 | B | 12 | 34 | 655 | 8 | C | | | | 655 | 8 | C | |
| | 8 | 12 | 20 | 687 | 8 | C | 12 | 20 | 817 | 9 | C | | | | 817 | 9 | C | |
| ***Seventh Ave @ 31st St*** | 1 | 19 | 23 | 565 | 6 | B | 19 | 23 | 565 | 6 | B | | | | 565 | 6 | B | |
| | 2 | 19 | 23 | 883 | 7 | B | 19 | 23 | 884 | 7 | B | | | | 884 | 7 | B | |
| | 3 | 10 | 13 | 526 | 8 | C | 10 | 13 | 584 | 8 | C | | | | 584 | 8 | C | |
| | 4 | 10 | 13 | 282 | 6 | B | 10 | 13 | 285 | 6 | B | | | | 285 | 6 | B | |
| | 5 | 17 | 20 | 443 | 6 | B | 17 | 20 | 444 | 6 | B | | | | 444 | 6 | B | |
| | 6 | 16 | 20 | 800 | 7 | B | 16 | 20 | 800 | 7 | B | | | | 800 | 7 | B | |
| | 7 | 10 | 13 | 162 | 5 | B | 10 | 13 | 166 | 5 | B | | | | 166 | 5 | B | |
| | 8 | 15 | 18 | 246 | 5 | B | 15 | 18 | 251 | 5 | B | | | | 251 | 5 | B | |
| ***Seventh Ave @ 33rd St*** | 1 | 16 | 20 | 581 | 6 | B | 16 | 20 | 584 | 6 | B | | | | 584 | 6 | B | |
| | 2 | 15 | 20 | 695 | 7 | B | 15 | 20 | 695 | 7 | B | | | | 695 | 7 | B | |
| | 3 | 7 | 13 | 417 | 8 | C | 7 | 13 | 471 | 8 | C | | | | 471 | 8 | C | |
| | 4 | 10 | 13 | 563 | 8 | C | 10 | 13 | 569 | 8 | C | | | | 569 | 8 | C | |
| | 5 | 15 | 20 | 593 | 7 | B | 15 | 20 | 593 | 7 | B | | | | 593 | 7 | B | |
| | 6 | 37 | 40 | 748 | 5 | B | 37 | 40 | 748 | 5 | B | | | | 748 | 5 | B | |
| | 7 | 37 | 40 | 534 | 5 | B | 37 | 40 | 650 | 5 | B | | | | 650 | 5 | B | |
| | 8 | 9 | 15 | 408 | 7 | B | 9 | 15 | 423 | 7 | B | | | | 423 | 7 | B | |

# Appendix S.5.3

**Pedestrian Improvement Analysis - Sidewalks Level of Service**

**2010 Future Conditions (AM)**

| Intersection | Walkway Location | 2010 Future without the Proposed Action | | | | | 2010 Future with the Proposed Action | | | | | | 2010 Future with the Proposed Action (Improvement) | | | | | |
|---|---|---|---|---|---|---|---|---|---|---|---|---|---|---|---|---|---|---|
| | | Effective Walkway width | Actual walkway width | Sidewalk Volumes | Platoon Flow Rate (ped/min/ft) | Platoon Level of Service | Effective Walkway width | Actual walkway width | Sidewalk Volumes | Platoon Flow Rate (ped/min/ft) | Platoon Level of Service | Impact? | Proposed Effective Walkwa | Proposed Actual walkway width | Sidewalk Volumes | Platoon Flow Rate (ped/min/ft) | Platoon Level of Service | Still Impact? |
| ***Seventh Ave @ 34th St*** | 1 | 17 | 20 | 567 | 6 | B | 17 | 20 | 572 | 6 | B | | | | 572 | 6 | B | |
| | 2 | 17 | 20 | 637 | 6 | B | 17 | 20 | 640 | 7 | B | | | | 640 | 7 | B | |
| | 3 | 20 | 23 | 343 | 5 | B | 20 | 23 | 366 | 5 | B | | | | 366 | 5 | B | |
| | 4 | 20 | 23 | 791 | 7 | B | 20 | 23 | 806 | 7 | B | | | | 806 | 7 | B | |
| | 5 | 17 | 20 | 394 | 6 | B | 17 | 20 | 395 | 6 | B | | | | 395 | 6 | B | |
| | 6 | 17 | 20 | 367 | 5 | B | 17 | 20 | 369 | 5 | B | | | | 369 | 5 | B | |
| | 7 | 20 | 23 | 1102 | 8 | C | 20 | 23 | 1172 | 8 | C | | | | 1172 | 8 | C | |
| | 8 | 20 | 23 | 254 | 5 | B | 20 | 23 | 283 | 5 | B | | | | 283 | 5 | B | |
| ***Sixth Ave @ 33rd St*** | 1 | 26 | 34 | 356 | 5 | B | 26 | 34 | 356 | 5 | B | | | | 356 | 5 | B | |
| | 2 | 25 | 28 | 400 | 5 | B | 25 | 28 | 400 | 5 | B | | | | 400 | 5 | B | |
| | 3 | 10 | 13 | 268 | 6 | B | 10 | 13 | 272 | 6 | B | | | | 272 | 6 | B | |
| | 4 | 10 | 13 | 386 | 7 | B | 10 | 13 | 390 | 7 | B | | | | 390 | 7 | B | |
| | 5 | 24 | 27 | 322 | 5 | B | 24 | 27 | 329 | 5 | B | | | | 329 | 5 | B | |
| | 6 | 17 | 24 | 636 | 6 | B | 17 | 24 | 637 | 6 | B | | | | 637 | 6 | B | |
| | 7 | 10 | 13 | 485 | 7 | B | 10 | 13 | 545 | 8 | C | | | | 545 | 8 | C | |
| | 8 | 10 | 13 | 267 | 6 | B | 10 | 13 | 271 | 6 | B | | | | 271 | 6 | B | |
| ***Sixth Ave @ 34th St*** | 1 | 0 | 0 | 0 | N/A | N/A | 0 | 0 | 0 | N/A | N/A | | | | 0 | N/A | N/A | |
| | 2 | 10 | 17 | 839 | 10 | C | 10 | 17 | 839 | 10 | C | | | | 839 | 10 | C | |
| | 3 | 20 | 23 | 491 | 6 | B | 20 | 23 | 505 | 6 | B | | | | 505 | 6 | B | |
| | 4 | 18 | 23 | 501 | 6 | B | 18 | 23 | 515 | 6 | B | | | | 515 | 6 | B | |
| | 5 | 14 | 17 | 730 | 7 | B | 14 | 17 | 730 | 7 | B | | | | 730 | 7 | B | |
| | 6 | 0 | 0 | 0 | N/A | N/A | 0 | 0 | 0 | N/A | N/A | | | | 0 | N/A | N/A | |
| | 7 | 0 | 0 | 0 | N/A | N/A | 0 | 0 | 0 | N/A | N/A | | | | 0 | N/A | N/A | |
| | 8 | 0 | 0 | 0 | N/A | N/A | 0 | 0 | 0 | N/A | N/A | | | | 0 | N/A | N/A | |
| ***Broadway @ 34th St*** | 1 | 25 | 30 | 889 | 6 | B | 25 | 30 | 889 | 6 | B | | | | 889 | 6 | B | |
| | 2 | 0 | 0 | 0 | N/A | N/A | 0 | 0 | 0 | N/A | N/A | | | | 0 | N/A | N/A | |
| | 3 | 0 | 0 | 0 | N/A | N/A | 0 | 0 | 0 | N/A | N/A | | | | 0 | N/A | N/A | |
| | 4 | 0 | 0 | 0 | N/A | N/A | 0 | 0 | 0 | N/A | N/A | | | | 0 | N/A | N/A | |
| | 5 | 0 | 0 | 0 | N/A | N/A | 0 | 0 | 0 | N/A | N/A | | | | 0 | N/A | N/A | |
| | 6 | 25 | 30 | 884 | 6 | B | 25 | 30 | 884 | 6 | B | | | | 884 | 6 | B | |
| | 7 | 18 | 23 | 682 | 7 | B | 18 | 23 | 703 | 7 | B | | | | 703 | 7 | B | |
| | 8 | 18 | 23 | 544 | 6 | B | 18 | 23 | 560 | 6 | B | | | | 560 | 6 | B | |
| ***Blvd @ 33rd St*** | 1 | 0 | 0 | 0 | N/A | N/A | 10 | 10 | 111 | 5 | B | | | | 111 | 5 | B | |
| | 2 | 0 | 0 | 0 | N/A | N/A | 10 | 13 | 44 | 4 | B | | | | 44 | 4 | B | |
| | 3 | 0 | 0 | 0 | N/A | N/A | 10 | 13 | 92 | 5 | B | | | | 92 | 5 | B | |
| | 4 | 0 | 0 | 0 | N/A | N/A | 10 | 13 | 79 | 5 | B | | | | 79 | 5 | B | |
| | 5 | 0 | 0 | 0 | N/A | N/A | 0 | 0 | 0 | N/A | N/A | | | | 0 | N/A | N/A | |
| | 6 | 0 | 0 | 0 | N/A | N/A | 0 | 0 | 0 | N/A | N/A | | | | 0 | N/A | N/A | |
| | 7 | 0 | 0 | 0 | N/A | N/A | 10 | 13 | 26 | 4 | B | | | | 26 | 4 | B | |
| | 8 | 0 | 0 | 0 | N/A | N/A | 10 | 13 | 39 | 4 | B | | | | 39 | 4 | B | |
| ***Blvd @ 34th St*** | 1 | 0 | 0 | 0 | N/A | N/A | 15 | 18 | 341 | 6 | B | | | | 341 | 6 | B | |
| | 2 | 0 | 0 | 0 | N/A | N/A | 10 | 13 | 6 | 4 | B | | | | 6 | 4 | B | |
| | 3 | 0 | 0 | 0 | N/A | N/A | 17 | 20 | 184 | 5 | B | | | | 184 | 5 | B | |
| | 4 | 0 | 0 | 0 | N/A | N/A | 17 | 20 | 150 | 5 | B | | | | 150 | 5 | B | |
| | 5 | 0 | 0 | 0 | N/A | N/A | 10 | 13 | 45 | 4 | B | | | | 45 | 4 | B | |
| | 6 | 0 | 0 | 0 | N/A | N/A | 10 | 13 | 70 | 4 | B | | | | 70 | 4 | B | |
| | 7 | 0 | 0 | 0 | N/A | N/A | 17 | 20 | 111 | 4 | B | | | | 111 | 4 | B | |
| | 8 | 0 | 0 | 0 | N/A | N/A | 26 | 30 | 369 | 5 | B | | | | 369 | 5 | B | |

# Appendix S.5.3

**Pedestrian Improvement Analysis - Sidewalks Level of Service**

**2010 Future Conditions (MD)**

| Intersection | Walkway Location | 2010 Future without the Proposed Action | | | | | 2010 Future with the Proposed Action | | | | | | 2010 Future with the Proposed Action (Improvement) | | | | | |
|---|---|---|---|---|---|---|---|---|---|---|---|---|---|---|---|---|---|---|
| | | Effective Walkway width | Actual walkway width | Sidewalk Volumes | Platoon Flow Rate (ped/min/ft) | Platoon Level of Service | Effective Walkway width | Actual walkway width | Sidewalk Volumes | Platoon Flow Rate (ped/min/ft) | Platoon Level of Service | Impact? | Proposed Effective Walkwa | Proposed Actual walkway width | Sidewalk Volumes | Platoon Flow Rate (ped/min/ft) | Platoon Level of Service | Still Impact? |
| ***Twelfth Ave @ 30th St*** | 1 | 0 | 0 | 0 | N/A | N/A | 0 | 0 | 0 | N/A | N/A | | | | 0 | N/A | N/A | |
| | 2 | 9 | 11 | 2 | 4 | B | 9 | 11 | 2 | 4 | B | | | | 2 | 4 | B | |
| | 3 | 10 | 13 | 0 | 4 | B | 10 | 13 | 0 | 4 | B | | | | 0 | 4 | B | |
| | 4 | 10 | 13 | 1 | 4 | B | 10 | 13 | 1 | 4 | B | | | | 1 | 4 | B | |
| | 5 | 12 | 15 | 2 | 4 | B | 12 | 15 | 2 | 4 | B | | | | 2 | 4 | B | |
| | 6 | 0 | 0 | 0 | N/A | N/A | 0 | 0 | 0 | N/A | N/A | | | | 0 | N/A | N/A | |
| | 7 | 0 | 0 | 0 | N/A | N/A | 0 | 0 | 0 | N/A | N/A | | | | 0 | N/A | N/A | |
| | 8 | 0 | 0 | 0 | N/A | N/A | 0 | 0 | 0 | N/A | N/A | | | | 0 | N/A | N/A | |
| ***Twelfth Ave @ 34th St*** | 1 | 0 | 0 | 0 | N/A | N/A | 0 | 0 | 0 | N/A | N/A | | | | 0 | N/A | N/A | |
| | 2 | 9 | 12 | 3 | 4 | B | 9 | 12 | 7 | 4 | B | | | | 7 | 4 | B | |
| | 3 | 15 | 18 | 26 | 4 | B | 15 | 18 | 28 | 4 | B | | | | 28 | 4 | B | |
| | 4 | 15 | 18 | 104 | 4 | B | 15 | 18 | 110 | 4 | B | | | | 110 | 4 | B | |
| | 5 | 9 | 12 | 2 | 4 | B | 9 | 12 | 2 | 4 | B | | | | 2 | 4 | B | |
| | 6 | 0 | 0 | 0 | N/A | N/A | 0 | 0 | 0 | N/A | N/A | | | | 0 | N/A | N/A | |
| | 7 | 0 | 0 | 0 | N/A | N/A | 0 | 0 | 0 | N/A | N/A | | | | 0 | N/A | N/A | |
| | 8 | 0 | 0 | 0 | N/A | N/A | 0 | 0 | 0 | N/A | N/A | | | | 0 | N/A | N/A | |
| ***Twelfth Ave @ 39th St*** | 1 | 0 | 0 | 0 | N/A | N/A | 0 | 0 | 0 | N/A | N/A | | | | 0 | N/A | N/A | |
| | 2 | 10 | 13 | 11 | 4 | B | 10 | 13 | 11 | 4 | B | | | | 11 | 4 | B | |
| | 3 | 10 | 13 | 0 | 4 | B | 0 | 0 | 0 | N/A | N/A | | | | 0 | N/A | N/A | |
| | 4 | 10 | 13 | 83 | 5 | B | 0 | 0 | 0 | N/A | N/A | | | | 0 | N/A | N/A | |
| | 5 | 15 | 18 | 13 | 4 | B | 15 | 18 | 17 | 4 | B | | | | 17 | 4 | B | |
| | 6 | 0 | 0 | 0 | N/A | N/A | 0 | 0 | 0 | N/A | N/A | | | | 0 | N/A | N/A | |
| | 7 | 0 | 0 | 0 | N/A | N/A | 0 | 0 | 0 | N/A | N/A | | | | 0 | N/A | N/A | |
| | 8 | 0 | 0 | 0 | N/A | N/A | 0 | 0 | 0 | N/A | N/A | | | | 0 | N/A | N/A | |
| ***Twelfth Ave @ 40th St*** | 1 | 0 | 0 | 0 | N/A | N/A | 0 | 0 | 0 | N/A | N/A | | | | 0 | N/A | N/A | |
| | 2 | 10 | 13 | 3 | 4 | B | 10 | 13 | 3 | 4 | B | | | | 3 | 4 | B | |
| | 3 | 9 | 11 | 2 | 4 | B | 0 | 0 | 2 | N/A | N/A | | | | 0 | N/A | N/A | |
| | 4 | 9 | 12 | 1 | 4 | B | 0 | 0 | 1 | N/A | N/A | | | | 0 | N/A | N/A | |
| | 5 | 11 | 14 | 2 | 4 | B | 11 | 14 | 2 | 4 | B | | | | 2 | 4 | B | |
| | 6 | 0 | 0 | 0 | N/A | N/A | 0 | 0 | 0 | N/A | N/A | | | | 0 | N/A | N/A | |
| | 7 | 0 | 0 | 0 | N/A | N/A | 0 | 0 | 0 | N/A | N/A | | | | 0 | N/A | N/A | |
| | 8 | 0 | 0 | 0 | N/A | N/A | 0 | 0 | 0 | N/A | N/A | | | | 0 | N/A | N/A | |
| ***Twelfth Ave @ 42nd St*** | 1 | 0 | 0 | 0 | N/A | N/A | 0 | 0 | 0 | N/A | N/A | | | | 0 | N/A | N/A | |
| | 2 | 17 | 20 | 24 | 4 | B | 17 | 20 | 28 | 4 | B | | | | 28 | 4 | B | |
| | 3 | 12 | 15 | 123 | 5 | B | 12 | 15 | 133 | 5 | B | | | | 133 | 5 | B | |
| | 4 | 23 | 26 | 107 | 4 | B | 23 | 26 | 107 | 4 | B | | | | 107 | 4 | B | |
| | 5 | 17 | 20 | 8 | 4 | B | 17 | 20 | 8 | 4 | B | | | | 8 | 4 | B | |
| | 6 | 0 | 0 | 0 | N/A | N/A | 0 | 0 | 0 | N/A | N/A | | | | 0 | N/A | N/A | |
| | 7 | 0 | 0 | 0 | N/A | N/A | 0 | 0 | 0 | N/A | N/A | | | | 0 | N/A | N/A | |
| | 8 | 0 | 0 | 0 | N/A | N/A | 0 | 0 | 0 | N/A | N/A | | | | 0 | N/A | N/A | |
| ***Eleventh Ave @ 29th St*** | 1 | 12 | 15 | 32 | 4 | B | 12 | 15 | 71 | 4 | B | | | | 71 | 4 | B | |
| | 2 | 12 | 15 | 86 | 4 | B | 12 | 15 | 147 | 5 | B | | | | 147 | 5 | B | |
| | 3 | 10 | 13 | 14 | 4 | B | 10 | 13 | 53 | 4 | B | | | | 53 | 4 | B | |
| | 4 | 10 | 13 | 13 | 4 | B | 10 | 13 | 22 | 4 | B | | | | 22 | 4 | B | |
| | 5 | 12 | 15 | 87 | 4 | B | 12 | 15 | 117 | 5 | B | | | | 117 | 5 | B | |
| | 6 | 12 | 15 | 34 | 4 | B | 12 | 15 | 57 | 4 | B | | | | 57 | 4 | B | |
| | 7 | 10 | 13 | 0 | 4 | B | 10 | 13 | 0 | 4 | B | | | | 0 | 4 | B | |
| | 8 | 10 | 13 | 3 | 4 | B | 10 | 13 | 3 | 4 | B | | | | 3 | 4 | B | |

# Appendix S.5.3

**Pedestrian Improvement Analysis - Sidewalks Level of Service**

**2010 Future Conditions (MD)**

| Intersection | Walkway Location | 2010 Future without the Proposed Action | | | | | 2010 Future with the Proposed Action | | | | | | 2010 Future with the Proposed Action (Improvement) | | | | | |
|---|---|---|---|---|---|---|---|---|---|---|---|---|---|---|---|---|---|---|
| | | Effective Walkway width | Actual walkway width | Sidewalk Volumes | Platoon Flow Rate (ped/min/ft) | Platoon Level of Service | Effective Walkway width | Actual walkway width | Sidewalk Volumes | Platoon Flow Rate (ped/min/ft) | Platoon Level of Service | Impact? | Proposed Effective Walkwa | Proposed Actual walkway width | Sidewalk Volumes | Platoon Flow Rate (ped/min/ft) | Platoon Level of Service | Still Impact? |
| ***Eleventh Ave @ 30th St*** | 1 | 12 | 15 | 25 | 4 | B | 12 | 15 | 76 | 4 | B | | | | 76 | 4 | B | |
| | 2 | 12 | 15 | 72 | 4 | B | 12 | 15 | 152 | 5 | B | | | | 152 | 5 | B | |
| | 3 | 10 | 13 | 133 | 5 | B | 10 | 13 | 157 | 5 | B | | | | 157 | 5 | B | |
| | 4 | 10 | 13 | 8 | 4 | B | 10 | 13 | 27 | 4 | B | | | | 27 | 4 | B | |
| | 5 | 12 | 15 | 111 | 5 | B | 12 | 15 | 186 | 5 | B | | | | 186 | 5 | B | |
| | 6 | 12 | 15 | 48 | 4 | B | 12 | 15 | 100 | 5 | B | | | | 100 | 5 | B | |
| | 7 | 10 | 13 | 5 | 4 | B | 10 | 13 | 5 | 4 | B | | | | 5 | 4 | B | |
| | 8 | 10 | 13 | 15 | 4 | B | 10 | 13 | 28 | 4 | B | | | | 28 | 4 | B | |
| ***Eleventh Ave @ 33rd St*** | 1 | 12 | 15 | 5 | 4 | B | 12 | 15 | 85 | 4 | B | | | | 85 | 4 | B | |
| | 2 | 12 | 15 | 181 | 5 | B | 12 | 15 | 274 | 6 | B | | | | 274 | 6 | B | |
| | 3 | 10 | 13 | 153 | 5 | B | 10 | 13 | 179 | 5 | B | | | | 179 | 5 | B | |
| | 4 | 10 | 13 | 2 | 4 | B | 10 | 13 | 29 | 4 | B | | | | 29 | 4 | B | |
| | 5 | 12 | 15 | 33 | 4 | B | 12 | 15 | 126 | 5 | B | | | | 126 | 5 | B | |
| | 6 | 12 | 15 | 3 | 4 | B | 12 | 15 | 40 | 4 | B | | | | 40 | 4 | B | |
| | 7 | 10 | 13 | 0 | 4 | B | 0 | 0 | 0 | N/A | N/A | | | | 0 | N/A | N/A | |
| | 8 | 10 | 13 | 2 | 4 | B | 0 | 0 | 0 | N/A | N/A | | | | 0 | N/A | N/A | |
| ***Eleventh Ave @ 34th St*** | 1 | 13 | 15 | 6 | 4 | B | 13 | 15 | 91 | 4 | B | | | | 91 | 4 | B | |
| | 2 | 9 | 12 | 141 | 5 | B | 14 | 17 | 321 | 6 | B | | | | 321 | 6 | B | |
| | 3 | 17 | 20 | 89 | 4 | B | 26 | 30 | 390 | 5 | B | | | | 390 | 5 | B | |
| | 4 | 17 | 20 | 72 | 4 | B | 17 | 20 | 153 | 5 | B | | | | 153 | 5 | B | |
| | 5 | 12 | 15 | 152 | 5 | B | 12 | 15 | 262 | 5 | B | | | | 262 | 5 | B | |
| | 6 | 12 | 15 | 7 | 4 | B | 12 | 15 | 115 | 5 | B | | | | 115 | 5 | B | |
| | 7 | 17 | 20 | 120 | 4 | B | 17 | 20 | 126 | 4 | B | | | | 126 | 4 | B | |
| | 8 | 17 | 20 | 44 | 4 | B | 17 | 20 | 46 | 4 | B | | | | 46 | 4 | B | |
| ***Eleventh Ave @ 35th St*** | 1 | 16 | 19 | 10 | 4 | B | 16 | 19 | 81 | 4 | B | | | | 81 | 4 | B | |
| | 2 | 14 | 15 | 117 | 5 | B | 14 | 15 | 231 | 5 | B | | | | 231 | 5 | B | |
| | 3 | 12 | 14 | 1 | 4 | B | 12 | 14 | 23 | 4 | B | | | | 23 | 4 | B | |
| | 4 | 12 | 14 | 9 | 4 | B | 17 | 19 | 52 | 4 | B | | | | 52 | 4 | B | |
| | 5 | 8 | 11 | 117 | 5 | B | 13 | 16 | 281 | 5 | B | | | | 281 | 5 | B | |
| | 6 | 12 | 15 | 8 | 4 | B | 12 | 15 | 93 | 5 | B | | | | 93 | 5 | B | |
| | 7 | 0 | 0 | 0 | N/A | N/A | 0 | 0 | 0 | N/A | N/A | | | | 0 | N/A | N/A | |
| | 8 | 0 | 0 | 0 | N/A | N/A | 0 | 0 | 0 | N/A | N/A | | | | 0 | N/A | N/A | |
| ***Eleventh Ave @ 36th St*** | 1 | 12 | 15 | 11 | 4 | B | 12 | 15 | 83 | 4 | B | | | | 83 | 4 | B | |
| | 2 | 7 | 9 | 107 | 5 | B | 7 | 9 | 180 | 6 | B | | | | 180 | 6 | B | |
| | 3 | 10 | 13 | 2 | 4 | B | 10 | 13 | 17 | 4 | B | | | | 17 | 4 | B | |
| | 4 | 8 | 10 | 4 | 4 | B | 8 | 10 | 12 | 4 | B | | | | 12 | 4 | B | |
| | 5 | 12 | 15 | 104 | 5 | B | 12 | 15 | 268 | 5 | B | | | | 268 | 5 | B | |
| | 6 | 13 | 17 | 6 | 4 | B | 13 | 17 | 77 | 4 | B | | | | 77 | 4 | B | |
| | 7 | 0 | 0 | 0 | N/A | N/A | 0 | 0 | 0 | N/A | N/A | | | | 0 | N/A | N/A | |
| | 8 | 0 | 0 | 0 | N/A | N/A | 0 | 0 | 0 | N/A | N/A | | | | 0 | N/A | N/A | |
| ***Eleventh Ave @ 37th St*** | 1 | 12 | 15 | 0 | 4 | B | 12 | 15 | 86 | 4 | B | | | | 86 | 4 | B | |
| | 2 | 7 | 10 | 104 | 5 | B | 7 | 10 | 154 | 5 | B | | | | 154 | 5 | B | |
| | 3 | 9 | 12 | 8 | 4 | B | 9 | 12 | 28 | 4 | B | | | | 28 | 4 | B | |
| | 4 | 9 | 12 | 6 | 4 | B | 9 | 12 | 14 | 4 | B | | | | 14 | 4 | B | |
| | 5 | 7 | 10 | 86 | 5 | B | 7 | 10 | 149 | 5 | B | | | | 149 | 5 | B | |
| | 6 | 12 | 15 | 7 | 4 | B | 12 | 15 | 79 | 4 | B | | | | 79 | 4 | B | |
| | 7 | 0 | 0 | 0 | N/A | N/A | 0 | 0 | 0 | N/A | N/A | | | | 0 | N/A | N/A | |
| | 8 | 0 | 0 | 0 | N/A | N/A | 0 | 0 | 0 | N/A | N/A | | | | 0 | N/A | N/A | |

# Appendix S.5.3

**Pedestrian Improvement Analysis - Sidewalks Level of Service**

**2010 Future Conditions (MD)**

| Intersection | Walkway Location | 2010 Future without the Proposed Action | | | | | 2010 Future with the Proposed Action | | | | | | 2010 Future with the Proposed Action (Improvement) | | | | | |
|---|---|---|---|---|---|---|---|---|---|---|---|---|---|---|---|---|---|---|
| | | Effective Walkway width | Actual walkway width | Sidewalk Volumes | Platoon Flow Rate (ped/min/ft) | Platoon Level of Service | Effective Walkway width | Actual walkway width | Sidewalk Volumes | Platoon Flow Rate (ped/min/ft) | Platoon Level of Service | Impact? | Proposed Effective Walkwa | Proposed Actual walkway width | Sidewalk Volumes | Platoon Flow Rate (ped/min/ft) | Platoon Level of Service | Still Impact? |
| ***Eleventh Ave @ 38th St*** | 1 | 12 | 15 | 1 | 4 | B | 12 | 15 | 105 | 5 | B | | | | 105 | 5 | B | |
| | 2 | 7 | 10 | 0 | 4 | B | 7 | 10 | 32 | 4 | B | | | | 32 | 4 | B | |
| | 3 | 8 | 11 | 1 | 4 | B | 8 | 11 | 21 | 4 | B | | | | 21 | 4 | B | |
| | 4 | 8 | 11 | 5 | 4 | B | 8 | 11 | 14 | 4 | B | | | | 14 | 4 | B | |
| | 5 | 7 | 10 | 72 | 5 | B | 7 | 10 | 113 | 5 | B | | | | 113 | 5 | B | |
| | 6 | 12 | 15 | 0 | 4 | B | 12 | 15 | 86 | 4 | B | | | | 86 | 4 | B | |
| | 7 | 0 | 0 | 0 | N/A | N/A | 0 | 0 | 0 | N/A | N/A | | | | 0 | N/A | N/A | |
| | 8 | 0 | 0 | 0 | N/A | N/A | 0 | 0 | 0 | N/A | N/A | | | | 0 | N/A | N/A | |
| ***Eleventh Ave @ 39th St*** | 1 | 11 | 14 | 8 | 4 | B | 11 | 14 | 125 | 5 | B | | | | 125 | 5 | B | |
| | 2 | 7 | 10 | 0 | 4 | B | 7 | 10 | 24 | 4 | B | | | | 24 | 4 | B | |
| | 3 | 9 | 12 | 21 | 4 | B | 9 | 12 | 29 | 4 | B | | | | 29 | 4 | B | |
| | 4 | 8 | 11 | 61 | 5 | B | 8 | 11 | 70 | 5 | B | | | | 70 | 5 | B | |
| | 5 | 7 | 10 | 0 | 4 | B | 7 | 10 | 24 | 4 | B | | | | 24 | 4 | B | |
| | 6 | 12 | 15 | 7 | 4 | B | 12 | 15 | 111 | 5 | B | | | | 111 | 5 | B | |
| | 7 | 10 | 13 | 60 | 4 | B | 0 | 0 | 0 | N/A | N/A | | | | 0 | N/A | N/A | |
| | 8 | 12 | 15 | 12 | 4 | B | 0 | 0 | 0 | N/A | N/A | | | | 0 | N/A | N/A | |
| ***Eleventh Ave @ 40th St*** | 1 | 12 | 15 | 3 | 4 | B | 12 | 15 | 150 | 5 | B | | | | 150 | 5 | B | |
| | 2 | 7 | 10 | 3 | 4 | B | 7 | 10 | 15 | 4 | B | | | | 15 | 4 | B | |
| | 3 | 10 | 13 | 5 | 4 | B | 10 | 13 | 41 | 4 | B | | | | 41 | 4 | B | |
| | 4 | 10 | 13 | 1 | 4 | B | 10 | 13 | 1 | 4 | B | | | | 1 | 4 | B | |
| | 5 | 7 | 10 | 5 | 4 | B | 7 | 10 | 17 | 4 | B | | | | 17 | 4 | B | |
| | 6 | 12 | 15 | 29 | 4 | B | 12 | 15 | 146 | 5 | B | | | | 146 | 5 | B | |
| | 7 | 10 | 13 | 8 | 4 | B | 0 | 0 | 0 | N/A | N/A | | | | 0 | N/A | N/A | |
| | 8 | 10 | 13 | 3 | 4 | B | 0 | 0 | 0 | N/A | N/A | | | | 0 | N/A | N/A | |
| ***Eleventh Ave @ 42nd St*** | 1 | 13 | 16 | 24 | 4 | B | 13 | 16 | 91 | 4 | B | | | | 91 | 4 | B | |
| | 2 | 13 | 16 | 7 | 4 | B | 13 | 16 | 41 | 4 | B | | | | 41 | 4 | B | |
| | 3 | 12 | 15 | 180 | 5 | B | 12 | 15 | 261 | 5 | B | | | | 261 | 5 | B | |
| | 4 | 12 | 15 | 134 | 5 | B | 12 | 15 | 279 | 6 | B | | | | 279 | 6 | B | |
| | 5 | 12 | 16 | 17 | 4 | B | 12 | 16 | 25 | 4 | B | | | | 25 | 4 | B | |
| | 6 | 12 | 15 | 55 | 4 | B | 12 | 15 | 71 | 4 | B | | | | 71 | 4 | B | |
| | 7 | 12 | 16 | 126 | 5 | B | 12 | 16 | 126 | 5 | B | | | | 126 | 5 | B | |
| | 8 | 12 | 16 | 135 | 5 | B | 12 | 16 | 269 | 5 | B | | | | 269 | 5 | B | |
| ***Tenth Ave @ 29th St*** | 1 | 12 | 15 | 97 | 5 | B | 12 | 15 | 132 | 5 | B | | | | 132 | 5 | B | |
| | 2 | 12 | 15 | 65 | 4 | B | 12 | 15 | 77 | 4 | B | | | | 77 | 4 | B | |
| | 3 | 10 | 13 | 57 | 4 | B | 10 | 13 | 63 | 4 | B | | | | 63 | 4 | B | |
| | 4 | 10 | 13 | 71 | 4 | B | 10 | 13 | 77 | 5 | B | | | | 77 | 5 | B | |
| | 5 | 12 | 15 | 77 | 4 | B | 12 | 15 | 89 | 4 | B | | | | 89 | 4 | B | |
| | 6 | 12 | 15 | 141 | 5 | B | 12 | 15 | 161 | 5 | B | | | | 161 | 5 | B | |
| | 7 | 10 | 13 | 43 | 4 | B | 10 | 13 | 45 | 4 | B | | | | 45 | 4 | B | |
| | 8 | 10 | 13 | 47 | 4 | B | 10 | 13 | 47 | 4 | B | | | | 47 | 4 | B | |
| ***Tenth Ave @ 30th St*** | 1 | 13 | 16 | 89 | 4 | B | 13 | 16 | 179 | 5 | B | | | | 179 | 5 | B | |
| | 2 | 12 | 15 | 115 | 5 | B | 12 | 15 | 142 | 5 | B | | | | 142 | 5 | B | |
| | 3 | 10 | 13 | 162 | 5 | B | 10 | 13 | 187 | 5 | B | | | | 187 | 5 | B | |
| | 4 | 12 | 15 | 46 | 4 | B | 12 | 15 | 68 | 4 | B | | | | 68 | 4 | B | |
| | 5 | 12 | 15 | 84 | 4 | B | 12 | 15 | 109 | 5 | B | | | | 109 | 5 | B | |
| | 6 | 12 | 15 | 121 | 5 | B | 12 | 15 | 169 | 5 | B | | | | 169 | 5 | B | |
| | 7 | 11 | 14 | 44 | 4 | B | 11 | 14 | 50 | 4 | B | | | | 50 | 4 | B | |
| | 8 | 11 | 14 | 149 | 5 | B | 11 | 14 | 170 | 5 | B | | | | 170 | 5 | B | |

# Appendix S.5.3

**Pedestrian Improvement Analysis - Sidewalks Level of Service**

**2010 Future Conditions (MD)**

| Intersection | Walkway Location | 2010 Future without the Proposed Action | | | | | 2010 Future with the Proposed Action | | | | | | 2010 Future with the Proposed Action (Improvement) | | | | | |
|---|---|---|---|---|---|---|---|---|---|---|---|---|---|---|---|---|---|---|
| | | Effective Walkway width | Actual walkway width | Sidewalk Volumes | Platoon Flow Rate (ped/min/ft) | Platoon Level of Service | Effective Walkway width | Actual walkway width | Sidewalk Volumes | Platoon Flow Rate (ped/min/ft) | Platoon Level of Service | Impact? | Proposed Effective Walkwa | Proposed Actual walkway width | Sidewalk Volumes | Platoon Flow Rate (ped/min/ft) | Platoon Level of Service | Still Impact? |
| ***Tenth Ave @ 31st St*** | 1 | 12 | 15 | 42 | 4 | B | 12 | 15 | 180 | 5 | B | | | | 180 | 5 | B | |
| | 2 | 12 | 15 | 78 | 4 | B | 12 | 15 | 109 | 5 | B | | | | 109 | 5 | B | |
| | 3 | 11 | 13 | 162 | 5 | B | 11 | 13 | 191 | 5 | B | | | | 191 | 5 | B | |
| | 4 | 11 | 13 | 18 | 4 | B | 11 | 13 | 43 | 4 | B | | | | 43 | 4 | B | |
| | 5 | 12 | 15 | 119 | 5 | B | 12 | 15 | 145 | 5 | B | | | | 145 | 5 | B | |
| | 6 | 12 | 15 | 91 | 5 | B | 12 | 15 | 181 | 5 | B | | | | 181 | 5 | B | |
| | 7 | 0 | 0 | 0 | N/A | N/A | 0 | 0 | 0 | N/A | N/A | | | | 0 | N/A | N/A | |
| | 8 | 0 | 0 | 0 | N/A | N/A | 0 | 0 | 0 | N/A | N/A | | | | 0 | N/A | N/A | |
| ***Tenth Ave @ 33rd St*** | 1 | 12 | 15 | 104 | 5 | B | 12 | 15 | 238 | 5 | B | | | | 238 | 5 | B | |
| | 2 | 12 | 15 | 116 | 5 | B | 12 | 15 | 158 | 5 | B | | | | 158 | 5 | B | |
| | 3 | 10 | 13 | 205 | 5 | B | 10 | 13 | 243 | 6 | B | | | | 243 | 6 | B | |
| | 4 | 10 | 13 | 316 | 6 | B | 10 | 13 | 362 | 6 | B | | | | 362 | 6 | B | |
| | 5 | 12 | 15 | 36 | 4 | B | 12 | 15 | 80 | 4 | B | | | | 80 | 4 | B | |
| | 6 | 12 | 15 | 48 | 4 | B | 12 | 15 | 186 | 5 | B | | | | 186 | 5 | B | |
| | 7 | 10 | 13 | 180 | 5 | B | 10 | 13 | 221 | 5 | B | | | | 221 | 5 | B | |
| | 8 | 10 | 13 | 315 | 6 | B | 10 | 13 | 358 | 6 | B | | | | 358 | 6 | B | |
| ***Tenth Ave @ 34th St*** | 1 | 12 | 15 | 124 | 5 | B | 12 | 15 | 145 | 5 | B | | | | 145 | 5 | B | |
| | 2 | 12 | 15 | 98 | 5 | B | 12 | 15 | 117 | 5 | B | | | | 117 | 5 | B | |
| | 3 | 17 | 20 | 135 | 5 | B | 17 | 20 | 206 | 5 | B | | | | 206 | 5 | B | |
| | 4 | 17 | 20 | 180 | 5 | B | 17 | 20 | 339 | 5 | B | | | | 339 | 5 | B | |
| | 5 | 12 | 15 | 165 | 5 | B | 12 | 15 | 221 | 5 | B | | | | 221 | 5 | B | |
| | 6 | 12 | 15 | 107 | 5 | B | 12 | 15 | 252 | 5 | B | | | | 252 | 5 | B | |
| | 7 | 17 | 20 | 127 | 4 | B | 17 | 20 | 300 | 5 | B | | | | 300 | 5 | B | |
| | 8 | 17 | 20 | 146 | 5 | B | 17 | 20 | 455 | 6 | B | | | | 455 | 6 | B | |
| ***Tenth Ave @ 35th St*** | 1 | 13 | 16 | 72 | 4 | B | 13 | 16 | 340 | 6 | B | | | | 340 | 6 | B | |
| | 2 | 13 | 15 | 76 | 4 | B | 13 | 15 | 142 | 5 | B | | | | 142 | 5 | B | |
| | 3 | 12 | 15 | 66 | 4 | B | 12 | 15 | 98 | 5 | B | | | | 98 | 5 | B | |
| | 4 | 7 | 9 | 1 | 4 | B | 7 | 9 | 191 | 6 | B | | | | 191 | 6 | B | |
| | 5 | 13 | 15 | 74 | 4 | B | 13 | 15 | 78 | 4 | B | | | | 78 | 4 | B | |
| | 6 | 11 | 15 | 64 | 4 | B | 11 | 15 | 73 | 4 | B | | | | 73 | 4 | B | |
| | 7 | 10 | 13 | 35 | 4 | B | 10 | 13 | 572 | 8 | C | | | | 572 | 8 | C | |
| | 8 | 12 | 14 | 71 | 4 | B | 12 | 14 | 100 | 5 | B | | | | 100 | 5 | B | |
| ***Tenth Ave @ 36th St*** | 1 | 12 | 15 | 68 | 4 | B | 12 | 15 | 276 | 6 | B | | | | 276 | 6 | B | |
| | 2 | 10 | 16 | 54 | 4 | B | 10 | 16 | 107 | 5 | B | | | | 107 | 5 | B | |
| | 3 | 9 | 12 | 41 | 4 | B | 9 | 12 | 68 | 5 | B | | | | 68 | 5 | B | |
| | 4 | 9 | 12 | 39 | 4 | B | 9 | 12 | 67 | 4 | B | | | | 67 | 4 | B | |
| | 5 | 12 | 15 | 51 | 4 | B | 12 | 15 | 105 | 5 | B | | | | 105 | 5 | B | |
| | 6 | 12 | 15 | 60 | 4 | B | 12 | 15 | 314 | 6 | B | | | | 314 | 6 | B | |
| | 7 | 9 | 12 | 25 | 4 | B | 9 | 12 | 33 | 4 | B | | | | 33 | 4 | B | |
| | 8 | 10 | 12 | 49 | 4 | B | 10 | 12 | 63 | 4 | B | | | | 63 | 4 | B | |
| ***Tenth Ave @ 37th St*** | 1 | 5 | 15 | 47 | 5 | B | 5 | 15 | 197 | 7 | B | | | | 197 | 7 | B | |
| | 2 | 5 | 15 | 68 | 5 | B | 5 | 15 | 130 | 6 | B | | | | 130 | 6 | B | |
| | 3 | 9 | 12 | 36 | 4 | B | 9 | 12 | 76 | 5 | B | | | | 76 | 5 | B | |
| | 4 | 9 | 12 | 35 | 4 | B | 9 | 12 | 70 | 5 | B | | | | 70 | 5 | B | |
| | 5 | 12 | 15 | 41 | 4 | B | 12 | 15 | 83 | 4 | B | | | | 83 | 4 | B | |
| | 6 | 12 | 15 | 47 | 4 | B | 12 | 15 | 245 | 5 | B | | | | 245 | 5 | B | |
| | 7 | 9 | 12 | 12 | 4 | B | 9 | 12 | 20 | 4 | B | | | | 20 | 4 | B | |
| | 8 | 9 | 12 | 50 | 4 | B | 9 | 12 | 70 | 5 | B | | | | 70 | 5 | B | |

# Appendix S.5.3

**Pedestrian Improvement Analysis - Sidewalks Level of Service**

**2010 Future Conditions (MD)**

| Intersection | Walkway Location | 2010 Future without the Proposed Action | | | | | 2010 Future with the Proposed Action | | | | | | 2010 Future with the Proposed Action (Improvement) | | | | | |
|---|---|---|---|---|---|---|---|---|---|---|---|---|---|---|---|---|---|---|
| | | Effective Walkway width | Actual walkway width | Sidewalk Volumes | Platoon Flow Rate (ped/min/ft) | Platoon Level of Service | Effective Walkway width | Actual walkway width | Sidewalk Volumes | Platoon Flow Rate (ped/min/ft) | Platoon Level of Service | Impact? | Proposed Effective Walkwa | Proposed Actual walkway width | Sidewalk Volumes | Platoon Flow Rate (ped/min/ft) | Platoon Level of Service | Still Impact? |
| ***Tenth Ave @ 38th St*** | 1 | 12 | 15 | 45 | 4 | B | 12 | 15 | 129 | 5 | B | | | | 129 | 5 | B | |
| | 2 | 12 | 15 | 57 | 4 | B | 12 | 15 | 127 | 5 | B | | | | 127 | 5 | B | |
| | 3 | 9 | 12 | 41 | 4 | B | 9 | 12 | 72 | 5 | B | | | | 72 | 5 | B | |
| | 4 | 9 | 12 | 18 | 4 | B | 9 | 12 | 54 | 4 | B | | | | 54 | 4 | B | |
| | 5 | 12 | 15 | 44 | 4 | B | 12 | 15 | 94 | 5 | B | | | | 94 | 5 | B | |
| | 6 | 12 | 15 | 44 | 4 | B | 12 | 15 | 172 | 5 | B | | | | 172 | 5 | B | |
| | 7 | 9 | 12 | 19 | 4 | B | 9 | 12 | 28 | 4 | B | | | | 28 | 4 | B | |
| | 8 | 9 | 12 | 14 | 4 | B | 9 | 12 | 30 | 4 | B | | | | 30 | 4 | B | |
| ***Tenth Ave @ 39th St*** | 1 | 12 | 15 | 51 | 4 | B | 12 | 15 | 75 | 4 | B | | | | 75 | 4 | B | |
| | 2 | 12 | 15 | 59 | 4 | B | 12 | 15 | 131 | 5 | B | | | | 131 | 5 | B | |
| | 3 | 9 | 12 | 46 | 4 | B | 9 | 12 | 77 | 5 | B | | | | 77 | 5 | B | |
| | 4 | 9 | 12 | 42 | 4 | B | 9 | 12 | 77 | 5 | B | | | | 77 | 5 | B | |
| | 5 | 12 | 15 | 57 | 4 | B | 12 | 15 | 119 | 5 | B | | | | 119 | 5 | B | |
| | 6 | 12 | 15 | 57 | 4 | B | 12 | 15 | 122 | 5 | B | | | | 122 | 5 | B | |
| | 7 | 10 | 13 | 40 | 4 | B | 10 | 13 | 48 | 4 | B | | | | 48 | 4 | B | |
| | 8 | 7 | 10 | 46 | 4 | B | 7 | 10 | 54 | 5 | B | | | | 54 | 5 | B | |
| ***Tenth Ave @ 40th St*** | 1 | 12 | 15 | 42 | 4 | B | 12 | 15 | 53 | 4 | B | | | | 53 | 4 | B | |
| | 2 | 12 | 15 | 48 | 4 | B | 12 | 15 | 119 | 5 | B | | | | 119 | 5 | B | |
| | 3 | 9 | 12 | 62 | 4 | B | 9 | 12 | 86 | 5 | B | | | | 86 | 5 | B | |
| | 4 | 9 | 12 | 45 | 4 | B | 9 | 12 | 68 | 5 | B | | | | 68 | 5 | B | |
| | 5 | 12 | 15 | 72 | 4 | B | 12 | 15 | 131 | 5 | B | | | | 131 | 5 | B | |
| | 6 | 12 | 15 | 49 | 4 | B | 12 | 15 | 60 | 4 | B | | | | 60 | 4 | B | |
| | 7 | 10 | 13 | 18 | 4 | B | 10 | 13 | 18 | 4 | B | | | | 18 | 4 | B | |
| | 8 | 10 | 13 | 29 | 4 | B | 10 | 13 | 67 | 4 | B | | | | 67 | 4 | B | |
| ***Tenth Ave @ 41st St*** | 1 | 12 | 15 | 58 | 4 | B | 12 | 15 | 60 | 4 | B | | | | 60 | 4 | B | |
| | 2 | 14 | 16 | 98 | 4 | B | 14 | 16 | 254 | 5 | B | | | | 254 | 5 | B | |
| | 3 | 8 | 10 | 102 | 5 | B | 8 | 10 | 137 | 5 | B | | | | 137 | 5 | B | |
| | 4 | 12 | 14 | 60 | 4 | B | 12 | 14 | 91 | 5 | B | | | | 91 | 5 | B | |
| | 5 | 13 | 16 | 70 | 4 | B | 13 | 16 | 145 | 5 | B | | | | 145 | 5 | B | |
| | 6 | 8 | 10 | 35 | 4 | B | 8 | 10 | 49 | 4 | B | | | | 49 | 4 | B | |
| | 7 | 13 | 17 | 10 | 4 | B | 13 | 17 | 27 | 4 | B | | | | 27 | 4 | B | |
| | 8 | 9 | 12 | 40 | 4 | B | 9 | 12 | 97 | 5 | B | | | | 97 | 5 | B | |
| ***Tenth Ave @ 42nd St*** | 1 | 17 | 20 | 99 | 4 | B | 17 | 20 | 125 | 4 | B | | | | 125 | 4 | B | |
| | 2 | 17 | 22 | 109 | 4 | B | 17 | 22 | 224 | 5 | B | | | | 224 | 5 | B | |
| | 3 | 18 | 21 | 283 | 5 | B | 18 | 21 | 369 | 5 | B | | | | 369 | 5 | B | |
| | 4 | 12 | 20 | 218 | 5 | B | 12 | 20 | 566 | 7 | B | | | | 566 | 7 | B | |
| | 5 | 8 | 16 | 63 | 5 | B | 8 | 16 | 78 | 5 | B | | | | 78 | 5 | B | |
| | 6 | 13 | 16 | 70 | 4 | B | 13 | 16 | 78 | 4 | B | | | | 78 | 4 | B | |
| | 7 | 13 | 15 | 176 | 5 | B | 13 | 15 | 326 | 6 | B | | | | 326 | 6 | B | |
| | 8 | 13 | 15 | 239 | 5 | B | 13 | 15 | 321 | 6 | B | | | | 321 | 6 | B | |
| ***Dyer @ 42nd St*** | 1 | 0 | 0 | 0 | N/A | N/A | 0 | 0 | 0 | N/A | N/A | | | | 0 | N/A | N/A | |
| | 2 | 0 | 0 | 0 | N/A | N/A | 0 | 0 | 0 | N/A | N/A | | | | 0 | N/A | N/A | |
| | 3 | 19 | 21 | 125 | 4 | B | 19 | 21 | 125 | 4 | B | | | | 125 | 4 | B | |
| | 4 | 18 | 20 | 97 | 4 | B | 18 | 20 | 97 | 4 | B | | | | 97 | 4 | B | |
| | 5 | 6 | 6 | 3 | 4 | B | 6 | 6 | 3 | 4 | B | | | | 3 | 4 | B | |
| | 6 | 2 | 4 | 5 | 4 | B | 2 | 4 | 5 | 4 | B | | | | 5 | 4 | B | |
| | 7 | 18 | 20 | 88 | 4 | B | 18 | 20 | 88 | 4 | B | | | | 88 | 4 | B | |
| | 8 | 19 | 21 | 105 | 4 | B | 19 | 21 | 105 | 4 | B | | | | 105 | 4 | B | |

# Appendix S.5.3

**Pedestrian Improvement Analysis - Sidewalks Level of Service**

**2010 Future Conditions (MD)**

| Intersection | Walkway Location | 2010 Future without the Proposed Action | | | | | 2010 Future with the Proposed Action | | | | | | 2010 Future with the Proposed Action (Improvement) | | | | | |
|---|---|---|---|---|---|---|---|---|---|---|---|---|---|---|---|---|---|---|
| | | Effective Walkway width | Actual walkway width | Sidewalk Volumes | Platoon Flow Rate (ped/min/ft) | Platoon Level of Service | Effective Walkway width | Actual walkway width | Sidewalk Volumes | Platoon Flow Rate (ped/min/ft) | Platoon Level of Service | Impact? | Proposed Effective Walkwa | Proposed Actual walkway width | Sidewalk Volumes | Platoon Flow Rate (ped/min/ft) | Platoon Level of Service | Still Impact? |
| ***Ninth Ave @ 30th St*** | 1 | 14 | 16 | 289 | 5 | B | 14 | 16 | 303 | 5 | B | | | | 303 | 5 | B | |
| | 2 | 8 | 15 | 591 | 9 | C | 8 | 15 | 605 | 9 | C | | | | 605 | 9 | C | |
| | 3 | 6 | 13 | 48 | 5 | B | 6 | 13 | 53 | 5 | B | | | | 53 | 5 | B | |
| | 4 | 10 | 13 | 59 | 4 | B | 10 | 13 | 61 | 4 | B | | | | 61 | 4 | B | |
| | 5 | 13 | 16 | 335 | 6 | B | 13 | 16 | 348 | 6 | B | | | | 348 | 6 | B | |
| | 6 | 13 | 16 | 305 | 6 | B | 13 | 16 | 318 | 6 | B | | | | 318 | 6 | B | |
| | 7 | 11 | 14 | 115 | 5 | B | 11 | 14 | 131 | 5 | B | | | | 131 | 5 | B | |
| | 8 | 10 | 12 | 178 | 5 | B | 10 | 12 | 198 | 5 | B | | | | 198 | 5 | B | |
| ***Ninth Ave @ 31st St*** | 1 | 12 | 15 | 84 | 4 | B | 12 | 15 | 109 | 5 | B | | | | 109 | 5 | B | |
| | 2 | 10 | 13 | 17 | 4 | B | 10 | 13 | 44 | 4 | B | | | | 44 | 4 | B | |
| | 3 | 10 | 13 | 984 | 11 | D | 10 | 13 | 994 | 11 | D | | | | 994 | 11 | D | |
| | 4 | 10 | 13 | 103 | 5 | B | 10 | 13 | 107 | 5 | B | | | | 107 | 5 | B | |
| | 5 | 12 | 15 | 493 | 7 | B | 12 | 15 | 519 | 7 | B | | | | 519 | 7 | B | |
| | 6 | 12 | 15 | 338 | 6 | B | 12 | 15 | 364 | 6 | B | | | | 364 | 6 | B | |
| | 7 | 10 | 13 | 147 | 5 | B | 10 | 13 | 165 | 5 | B | | | | 165 | 5 | B | |
| | 8 | 10 | 13 | 170 | 5 | B | 10 | 13 | 191 | 5 | B | | | | 191 | 5 | B | |
| ***Ninth Ave @ 33rd St*** | 1 | 12 | 15 | 254 | 5 | B | 12 | 15 | 297 | 6 | B | | | | 297 | 6 | B | |
| | 2 | 12 | 15 | 546 | 7 | B | 12 | 15 | 587 | 7 | B | | | | 587 | 7 | B | |
| | 3 | 10 | 13 | 245 | 6 | B | 10 | 13 | 259 | 6 | B | | | | 259 | 6 | B | |
| | 4 | 10 | 13 | 1153 | 12 | D | 10 | 13 | 1184 | 12 | D | | | | 1184 | 12 | D | |
| | 5 | 12 | 15 | 158 | 5 | B | 12 | 15 | 198 | 5 | B | | | | 198 | 5 | B | |
| | 6 | 12 | 15 | 228 | 5 | B | 12 | 15 | 267 | 5 | B | | | | 267 | 5 | B | |
| | 7 | 10 | 13 | 402 | 7 | B | 10 | 13 | 439 | 7 | B | | | | 439 | 7 | B | |
| | 8 | 10 | 13 | 252 | 6 | B | 10 | 13 | 283 | 6 | B | | | | 283 | 6 | B | |
| ***Ninth Ave @ 34th St*** | 1 | 11 | 15 | 312 | 6 | B | 11 | 15 | 330 | 6 | B | | | | 330 | 6 | B | |
| | 2 | 12 | 15 | 407 | 6 | B | 12 | 15 | 425 | 6 | B | | | | 425 | 6 | B | |
| | 3 | 19 | 23 | 289 | 5 | B | 19 | 23 | 328 | 5 | B | | | | 328 | 5 | B | |
| | 4 | 19 | 23 | 335 | 5 | B | 19 | 23 | 377 | 5 | B | | | | 377 | 5 | B | |
| | 5 | 12 | 15 | 650 | 8 | C | 12 | 15 | 705 | 8 | C | | | | 705 | 8 | C | |
| | 6 | 12 | 15 | 368 | 6 | B | 12 | 15 | 424 | 6 | B | | | | 424 | 6 | B | |
| | 7 | 16 | 20 | 291 | 5 | B | 16 | 20 | 442 | 6 | B | | | | 442 | 6 | B | |
| | 8 | 15 | 20 | 296 | 5 | B | 15 | 20 | 360 | 6 | B | | | | 360 | 6 | B | |
| ***Ninth Ave @ 37th St*** | 1 | 12 | 15 | 293 | 6 | B | 12 | 15 | 342 | 6 | B | | | | 342 | 6 | B | |
| | 2 | 12 | 15 | 244 | 5 | B | 12 | 15 | 286 | 6 | B | | | | 286 | 6 | B | |
| | 3 | 9 | 12 | 135 | 5 | B | 9 | 12 | 152 | 5 | B | | | | 152 | 5 | B | |
| | 4 | 9 | 12 | 63 | 4 | B | 9 | 12 | 75 | 5 | B | | | | 75 | 5 | B | |
| | 5 | 10 | 15 | 274 | 6 | B | 10 | 15 | 317 | 6 | B | | | | 317 | 6 | B | |
| | 6 | 12 | 15 | 300 | 6 | B | 12 | 15 | 339 | 6 | B | | | | 339 | 6 | B | |
| | 7 | 6 | 12 | 61 | 5 | B | 6 | 12 | 88 | 5 | B | | | | 88 | 5 | B | |
| | 8 | 9 | 12 | 91 | 5 | B | 9 | 12 | 120 | 5 | B | | | | 120 | 5 | B | |
| ***Ninth Ave @ 38th St*** | 1 | 10 | 15 | 152 | 5 | B | 10 | 15 | 152 | 5 | B | | | | 152 | 5 | B | |
| | 2 | 8 | 15 | 106 | 5 | B | 8 | 15 | 139 | 5 | B | | | | 139 | 5 | B | |
| | 3 | 8 | 11 | 52 | 4 | B | 8 | 11 | 71 | 5 | B | | | | 71 | 5 | B | |
| | 4 | 8 | 11 | 36 | 4 | B | 8 | 11 | 55 | 4 | B | | | | 55 | 4 | B | |
| | 5 | 10 | 15 | 91 | 5 | B | 10 | 15 | 121 | 5 | B | | | | 121 | 5 | B | |
| | 6 | 12 | 15 | 106 | 5 | B | 12 | 15 | 152 | 5 | B | | | | 152 | 5 | B | |
| | 7 | 8 | 11 | 52 | 4 | B | 8 | 11 | 78 | 5 | B | | | | 78 | 5 | B | |
| | 8 | 8 | 11 | 34 | 4 | B | 8 | 11 | 56 | 4 | B | | | | 56 | 4 | B | |

# Appendix S.5.3

**Pedestrian Improvement Analysis - Sidewalks Level of Service**

**2010 Future Conditions (MD)**

| Intersection | Walkway Location | 2010 Future without the Proposed Action | | | | | 2010 Future with the Proposed Action | | | | | | 2010 Future with the Proposed Action (Improvement) | | | | | |
|---|---|---|---|---|---|---|---|---|---|---|---|---|---|---|---|---|---|---|
| | | Effective Walkway width | Actual walkway width | Sidewalk Volumes | Platoon Flow Rate (ped/min/ft) | Platoon Level of Service | Effective Walkway width | Actual walkway width | Sidewalk Volumes | Platoon Flow Rate (ped/min/ft) | Platoon Level of Service | Impact? | Proposed Effective Walkwa | Proposed Actual walkway width | Sidewalk Volumes | Platoon Flow Rate (ped/min/ft) | Platoon Level of Service | Still Impact? |
| ***Ninth Ave @ 39th St*** | 1 | 8 | 15 | 108 | 5 | B | 8 | 15 | 122 | 5 | B | | | | 122 | 5 | B | |
| | 2 | 11 | 15 | 192 | 5 | B | 11 | 15 | 213 | 5 | B | | | | 213 | 5 | B | |
| | 3 | 9 | 12 | 90 | 5 | B | 9 | 12 | 99 | 5 | B | | | | 99 | 5 | B | |
| | 4 | 9 | 12 | 103 | 5 | B | 9 | 12 | 124 | 5 | B | | | | 124 | 5 | B | |
| | 5 | 10 | 15 | 205 | 5 | B | 10 | 15 | 229 | 6 | B | | | | 229 | 6 | B | |
| | 6 | 12 | 15 | 148 | 5 | B | 12 | 15 | 138 | 5 | B | | | | 138 | 5 | B | |
| | 7 | 9 | 12 | 51 | 4 | B | 9 | 12 | 76 | 5 | B | | | | 76 | 5 | B | |
| | 8 | 9 | 12 | 54 | 4 | B | 9 | 12 | 78 | 5 | B | | | | 78 | 5 | B | |
| ***Ninth Ave @ 42nd St*** | 1 | 13 | 16 | 337 | 6 | B | 13 | 16 | 357 | 6 | B | | | | 357 | 6 | B | |
| | 2 | 8 | 10 | 281 | 6 | B | 8 | 10 | 307 | 7 | B | | | | 307 | 7 | B | |
| | 3 | 8 | 11 | 381 | 7 | B | 8 | 11 | 478 | 8 | C | | | | 478 | 8 | C | |
| | 4 | 12 | 19 | 468 | 7 | B | 12 | 19 | 636 | 8 | C | | | | 636 | 8 | C | |
| | 5 | 8 | 14 | 272 | 6 | B | 8 | 14 | 290 | 7 | B | | | | 290 | 7 | B | |
| | 6 | 8 | 15 | 220 | 6 | B | 8 | 15 | 232 | 6 | B | | | | 232 | 6 | B | |
| | 7 | 13 | 20 | 279 | 5 | B | 13 | 20 | 573 | 7 | B | | | | 573 | 7 | B | |
| | 8 | 18 | 21 | 320 | 5 | B | 18 | 21 | 403 | 5 | B | | | | 403 | 5 | B | |
| ***Eighth Ave @ 30th St*** | 1 | 11 | 14 | 454 | 7 | B | 11 | 14 | 454 | 7 | B | | | | 454 | 7 | B | |
| | 2 | 11 | 15 | 393 | 6 | B | 11 | 15 | 395 | 6 | B | | | | 395 | 6 | B | |
| | 3 | 9 | 13 | 157 | 5 | B | 9 | 13 | 160 | 5 | B | | | | 160 | 5 | B | |
| | 4 | 11 | 14 | 120 | 5 | B | 11 | 14 | 123 | 5 | B | | | | 123 | 5 | B | |
| | 5 | 12 | 15 | 198 | 5 | B | 12 | 15 | 198 | 5 | B | | | | 198 | 5 | B | |
| | 6 | 11 | 14 | 304 | 6 | B | 11 | 14 | 304 | 6 | B | | | | 304 | 6 | B | |
| | 7 | 10 | 14 | 58 | 4 | B | 10 | 14 | 60 | 4 | B | | | | 60 | 4 | B | |
| | 8 | 10 | 13 | 79 | 5 | B | 10 | 13 | 84 | 5 | B | | | | 84 | 5 | B | |
| ***Eighth Ave @ 31st St*** | 1 | 12 | 16 | 211 | 5 | B | 12 | 16 | 211 | 5 | B | | | | 211 | 5 | B | |
| | 2 | 18 | 24 | 153 | 5 | B | 18 | 24 | 153 | 5 | B | | | | 153 | 5 | B | |
| | 3 | 35 | 49 | 438 | 5 | B | 35 | 49 | 443 | 5 | B | | | | 443 | 5 | B | |
| | 4 | 10 | 14 | 93 | 5 | B | 10 | 14 | 97 | 5 | B | | | | 97 | 5 | B | |
| | 5 | 12 | 15 | 251 | 5 | B | 12 | 15 | 252 | 5 | B | | | | 252 | 5 | B | |
| | 6 | 12 | 15 | 263 | 5 | B | 12 | 15 | 263 | 5 | B | | | | 263 | 5 | B | |
| | 7 | 10 | 13 | 158 | 5 | B | 10 | 13 | 164 | 5 | B | | | | 164 | 5 | B | |
| | 8 | 21 | 24 | 487 | 6 | B | 21 | 24 | 494 | 6 | B | | | | 494 | 6 | B | |
| ***Eighth Ave @ 33rd St*** | 1 | 12 | 15 | 1038 | 10 | C | 12 | 15 | 1039 | 10 | C | | | | 1039 | 10 | C | |
| | 2 | 12 | 19 | 328 | 6 | B | 12 | 19 | 332 | 6 | B | | | | 332 | 6 | B | |
| | 3 | 10 | 17 | 338 | 6 | B | 10 | 17 | 347 | 6 | B | | | | 347 | 6 | B | |
| | 4 | 30 | 43 | 884 | 6 | B | 30 | 43 | 888 | 6 | B | | | | 888 | 6 | B | |
| | 5 | 30 | 43 | 418 | 5 | B | 30 | 43 | 420 | 5 | B | | | | 420 | 5 | B | |
| | 6 | 12 | 16 | 472 | 7 | B | 12 | 16 | 472 | 7 | B | | | | 472 | 7 | B | |
| | 7 | 13 | 24 | 1321 | 11 | D | 13 | 24 | 1342 | 11 | D | | | | 1342 | 11 | D | |
| | 8 | 7 | 14 | 360 | 7 | B | 7 | 14 | 374 | 8 | C | | | | 374 | 8 | C | |
| ***Eighth Ave @ 34th St*** | 1 | 11 | 15 | 481 | 7 | B | 11 | 15 | 488 | 7 | B | | | | 488 | 7 | B | |
| | 2 | 11 | 15 | 216 | 5 | B | 11 | 15 | 221 | 5 | B | | | | 221 | 5 | B | |
| | 3 | 19 | 22 | 439 | 6 | B | 19 | 22 | 465 | 6 | B | | | | 465 | 6 | B | |
| | 4 | 19 | 22 | 287 | 5 | B | 19 | 22 | 325 | 5 | B | | | | 325 | 5 | B | |
| | 5 | 12 | 15 | 201 | 5 | B | 12 | 15 | 208 | 5 | B | | | | 208 | 5 | B | |
| | 6 | 11 | 15 | 645 | 8 | C | 11 | 15 | 647 | 8 | C | | | | 647 | 8 | C | |
| | 7 | 12 | 22 | 186 | 5 | B | 12 | 22 | 228 | 5 | B | | | | 228 | 5 | B | |
| | 8 | 18 | 22 | 273 | 5 | B | 18 | 22 | 312 | 5 | B | | | | 312 | 5 | B | |

# Appendix S.5.3

**Pedestrian Improvement Analysis - Sidewalks Level of Service**

**2010 Future Conditions (MD)**

| Intersection | Walkway Location | 2010 Future without the Proposed Action | | | | | 2010 Future with the Proposed Action | | | | | | 2010 Future with the Proposed Action (Improvement) | | | | | |
|---|---|---|---|---|---|---|---|---|---|---|---|---|---|---|---|---|---|---|
| | | Effective Walkway width | Actual walkway width | Sidewalk Volumes | Platoon Flow Rate (ped/min/ft) | Platoon Level of Service | Effective Walkway width | Actual walkway width | Sidewalk Volumes | Platoon Flow Rate (ped/min/ft) | Platoon Level of Service | Impact? | Proposed Effective Walkwa | Proposed Actual walkway width | Sidewalk Volumes | Platoon Flow Rate (ped/min/ft) | Platoon Level of Service | Still Impact? |
| ***Eighth Ave @ 37th St*** | 1 | 8 | 15 | 201 | 6 | B | 8 | 15 | 205 | 6 | B | | | | 205 | 6 | B | |
| | 2 | 12 | 15 | 462 | 7 | B | 12 | 15 | 463 | 7 | B | | | | 463 | 7 | B | |
| | 3 | 9 | 12 | 127 | 5 | B | 9 | 12 | 137 | 5 | B | | | | 137 | 5 | B | |
| | 4 | 6 | 12 | 203 | 6 | B | 6 | 12 | 213 | 6 | B | | | | 213 | 6 | B | |
| | 5 | 9 | 15 | 166 | 5 | B | 9 | 15 | 168 | 5 | B | | | | 168 | 5 | B | |
| | 6 | 9 | 15 | 339 | 7 | B | 9 | 15 | 344 | 7 | B | | | | 344 | 7 | B | |
| | 7 | 5 | 12 | 214 | 7 | B | 5 | 12 | 225 | 7 | B | | | | 225 | 7 | B | |
| | 8 | 10 | 13 | 288 | 6 | B | 10 | 13 | 302 | 6 | B | | | | 302 | 6 | B | |
| ***Eighth Ave @ 38th St*** | 1 | 8 | 15 | 262 | 6 | B | 8 | 15 | 270 | 6 | B | | | | 270 | 6 | B | |
| | 2 | 10 | 15 | 195 | 5 | B | 10 | 15 | 203 | 5 | B | | | | 203 | 5 | B | |
| | 3 | 5 | 12 | 37 | 4 | B | 5 | 12 | 53 | 5 | B | | | | 53 | 5 | B | |
| | 4 | 9 | 12 | 114 | 5 | B | 9 | 12 | 124 | 5 | B | | | | 124 | 5 | B | |
| | 5 | 8 | 15 | 238 | 6 | B | 8 | 15 | 242 | 6 | B | | | | 242 | 6 | B | |
| | 6 | 10 | 15 | 289 | 6 | B | 10 | 15 | 296 | 6 | B | | | | 296 | 6 | B | |
| | 7 | 8 | 11 | 102 | 5 | B | 8 | 11 | 118 | 5 | B | | | | 118 | 5 | B | |
| | 8 | 8 | 11 | 84 | 5 | B | 8 | 11 | 102 | 5 | B | | | | 102 | 5 | B | |
| ***Eighth Ave @ 39th St*** | 1 | 12 | 15 | 647 | 8 | C | 12 | 15 | 665 | 8 | C | | | | 665 | 8 | C | |
| | 2 | 11 | 15 | 747 | 9 | C | 11 | 15 | 759 | 9 | C | | | | 759 | 9 | C | |
| | 3 | 8 | 12 | 311 | 7 | B | 8 | 12 | 323 | 7 | B | | | | 323 | 7 | B | |
| | 4 | 9 | 12 | 343 | 7 | B | 9 | 12 | 358 | 7 | B | | | | 358 | 7 | B | |
| | 5 | 12 | 15 | 576 | 7 | B | 12 | 15 | 588 | 7 | B | | | | 588 | 7 | B | |
| | 6 | 12 | 15 | 761 | 8 | C | 12 | 15 | 773 | 8 | C | | | | 773 | 8 | C | |
| | 7 | 9 | 12 | 230 | 6 | B | 9 | 12 | 260 | 6 | B | | | | 260 | 6 | B | |
| | 8 | 9 | 12 | 194 | 5 | B | 9 | 12 | 200 | 5 | B | | | | 200 | 5 | B | |
| ***Eighth Ave @ 42nd St*** | 1 | 7 | 15 | 557 | 9 | C | 7 | 15 | 569 | 9 | C | | | | 569 | 9 | C | |
| | 2 | 16 | 16 | 597 | 6 | B | 16 | 16 | 609 | 7 | B | | | | 609 | 7 | B | |
| | 3 | 15 | 23 | 696 | 7 | B | 15 | 23 | 774 | 7 | B | | | | 774 | 7 | B | |
| | 4 | 14 | 16 | 984 | 9 | C | 14 | 16 | 1065 | 9 | C | | | | 1065 | 9 | C | |
| | 5 | 7 | 12 | 987 | 13 | D | 7 | 12 | 991 | 13 | D | | | | 991 | 13 | D | |
| | 6 | 12 | 29 | 715 | 8 | C | 12 | 29 | 728 | 8 | C | | | | 728 | 8 | C | |
| | 7 | 12 | 34 | 604 | 7 | B | 12 | 34 | 756 | 8 | C | | | | 756 | 8 | C | |
| | 8 | 12 | 20 | 639 | 8 | C | 12 | 20 | 733 | 8 | C | | | | 733 | 8 | C | |
| ***Seventh Ave @ 31st St*** | 1 | 19 | 23 | 541 | 6 | B | 19 | 23 | 541 | 6 | B | | | | 541 | 6 | B | |
| | 2 | 19 | 23 | 551 | 6 | B | 19 | 23 | 552 | 6 | B | | | | 552 | 6 | B | |
| | 3 | 10 | 13 | 322 | 6 | B | 10 | 13 | 326 | 6 | B | | | | 326 | 6 | B | |
| | 4 | 10 | 13 | 281 | 6 | B | 10 | 13 | 284 | 6 | B | | | | 284 | 6 | B | |
| | 5 | 17 | 20 | 327 | 5 | B | 17 | 20 | 327 | 5 | B | | | | 327 | 5 | B | |
| | 6 | 16 | 20 | 529 | 6 | B | 16 | 20 | 529 | 6 | B | | | | 529 | 6 | B | |
| | 7 | 10 | 13 | 89 | 5 | B | 10 | 13 | 92 | 5 | B | | | | 92 | 5 | B | |
| | 8 | 15 | 18 | 396 | 6 | B | 15 | 18 | 401 | 6 | B | | | | 401 | 6 | B | |
| ***Seventh Ave @ 33rd St*** | 1 | 16 | 20 | 613 | 7 | B | 16 | 20 | 615 | 7 | B | | | | 615 | 7 | B | |
| | 2 | 15 | 20 | 751 | 7 | B | 15 | 20 | 752 | 7 | B | | | | 752 | 7 | B | |
| | 3 | 7 | 13 | 397 | 8 | C | 7 | 13 | 401 | 8 | C | | | | 401 | 8 | C | |
| | 4 | 10 | 13 | 534 | 8 | C | 10 | 13 | 540 | 8 | C | | | | 540 | 8 | C | |
| | 5 | 15 | 20 | 585 | 7 | B | 15 | 20 | 585 | 7 | B | | | | 585 | 7 | B | |
| | 6 | 37 | 40 | 524 | 5 | B | 37 | 40 | 524 | 5 | B | | | | 524 | 5 | B | |
| | 7 | 37 | 40 | 714 | 5 | B | 37 | 40 | 719 | 5 | B | | | | 719 | 5 | B | |
| | 8 | 9 | 15 | 444 | 7 | B | 9 | 15 | 452 | 7 | B | | | | 452 | 7 | B | |

# Appendix S.5.3

**Pedestrian Improvement Analysis - Sidewalks Level of Service**

**2010 Future Conditions (MD)**

| Intersection | Walkway Location | 2010 Future without the Proposed Action | | | | | 2010 Future with the Proposed Action | | | | | | 2010 Future with the Proposed Action (Improvement) | | | | | |
|---|---|---|---|---|---|---|---|---|---|---|---|---|---|---|---|---|---|---|
| | | Effective Walkway width | Actual walkway width | Sidewalk Volumes | Platoon Flow Rate (ped/min/ft) | Platoon Level of Service | Effective Walkway width | Actual walkway width | Sidewalk Volumes | Platoon Flow Rate (ped/min/ft) | Platoon Level of Service | Impact? | Proposed Effective Walkwa | Proposed Actual walkway width | Sidewalk Volumes | Platoon Flow Rate (ped/min/ft) | Platoon Level of Service | Still Impact? |
| ***Seventh Ave @ 34th St*** | 1 | 17 | 20 | 472 | 6 | B | 17 | 20 | 476 | 6 | B | | | | 476 | 6 | B | |
| | 2 | 17 | 20 | 329 | 5 | B | 17 | 20 | 334 | 5 | B | | | | 334 | 5 | B | |
| | 3 | 20 | 23 | 516 | 6 | B | 20 | 23 | 544 | 6 | B | | | | 544 | 6 | B | |
| | 4 | 20 | 23 | 406 | 5 | B | 20 | 23 | 434 | 5 | B | | | | 434 | 5 | B | |
| | 5 | 17 | 20 | 414 | 6 | B | 17 | 20 | 415 | 6 | B | | | | 415 | 6 | B | |
| | 6 | 17 | 20 | 285 | 5 | B | 17 | 20 | 287 | 5 | B | | | | 287 | 5 | B | |
| | 7 | 20 | 23 | 335 | 5 | B | 20 | 23 | 373 | 5 | B | | | | 373 | 5 | B | |
| | 8 | 20 | 23 | 408 | 5 | B | 20 | 23 | 434 | 5 | B | | | | 434 | 5 | B | |
| ***Sixth Ave @ 33rd St*** | 1 | 26 | 34 | 627 | 6 | B | 26 | 34 | 627 | 6 | B | | | | 627 | 6 | B | |
| | 2 | 25 | 28 | 412 | 5 | B | 25 | 28 | 412 | 5 | B | | | | 412 | 5 | B | |
| | 3 | 10 | 13 | 283 | 6 | B | 10 | 13 | 288 | 6 | B | | | | 288 | 6 | B | |
| | 4 | 10 | 13 | 453 | 7 | B | 10 | 13 | 458 | 7 | B | | | | 458 | 7 | B | |
| | 5 | 24 | 27 | 476 | 5 | B | 24 | 27 | 476 | 5 | B | | | | 476 | 5 | B | |
| | 6 | 17 | 24 | 604 | 6 | B | 17 | 24 | 604 | 6 | B | | | | 604 | 6 | B | |
| | 7 | 10 | 13 | 368 | 6 | B | 10 | 13 | 374 | 6 | B | | | | 374 | 6 | B | |
| | 8 | 10 | 13 | 225 | 6 | B | 10 | 13 | 229 | 6 | B | | | | 229 | 6 | B | |
| ***Sixth Ave @ 34th St*** | 1 | 0 | 0 | 0 | N/A | N/A | 0 | 0 | 0 | N/A | N/A | | | | 0 | N/A | N/A | |
| | 2 | 10 | 17 | 1698 | 15 | D | 10 | 17 | 1698 | 15 | D | | | | 1698 | 15 | D | |
| | 3 | 20 | 23 | 905 | 7 | B | 20 | 23 | 930 | 7 | B | | | | 930 | 7 | B | |
| | 4 | 18 | 23 | 578 | 6 | B | 18 | 23 | 603 | 6 | B | | | | 603 | 6 | B | |
| | 5 | 14 | 17 | 1635 | 12 | D | 14 | 17 | 1635 | 12 | D | | | | 1635 | 12 | D | |
| | 6 | 0 | 0 | 0 | N/A | N/A | 0 | 0 | 0 | N/A | N/A | | | | 0 | N/A | N/A | |
| | 7 | 0 | 0 | 0 | N/A | N/A | 0 | 0 | 0 | N/A | N/A | | | | 0 | N/A | N/A | |
| | 8 | 0 | 0 | 0 | N/A | N/A | 0 | 0 | 0 | N/A | N/A | | | | 0 | N/A | N/A | |
| ***Broadway @ 34th St*** | 1 | 25 | 30 | 1472 | 8 | C | 25 | 30 | 1472 | 8 | C | | | | 1472 | 8 | C | |
| | 2 | 0 | 0 | 0 | N/A | N/A | 0 | 0 | 0 | N/A | N/A | | | | 0 | N/A | N/A | |
| | 3 | 0 | 0 | 0 | N/A | N/A | 0 | 0 | 0 | N/A | N/A | | | | 0 | N/A | N/A | |
| | 4 | 0 | 0 | 0 | N/A | N/A | 0 | 0 | 0 | N/A | N/A | | | | 0 | N/A | N/A | |
| | 5 | 0 | 0 | 0 | N/A | N/A | 0 | 0 | 0 | N/A | N/A | | | | 0 | N/A | N/A | |
| | 6 | 25 | 30 | 1640 | 8 | C | 25 | 30 | 1641 | 8 | C | | | | 1641 | 8 | C | |
| | 7 | 18 | 23 | 1060 | 8 | C | 18 | 23 | 1086 | 8 | C | | | | 1086 | 8 | C | |
| | 8 | 18 | 23 | 829 | 7 | B | 18 | 23 | 857 | 7 | B | | | | 857 | 7 | B | |
| ***Blvd @ 33rd St*** | 1 | 0 | 0 | 0 | N/A | N/A | 10 | 10 | 149 | 5 | B | | | | 149 | 5 | B | |
| | 2 | 0 | 0 | 0 | N/A | N/A | 10 | 13 | 89 | 5 | B | | | | 89 | 5 | B | |
| | 3 | 0 | 0 | 0 | N/A | N/A | 10 | 13 | 209 | 5 | B | | | | 209 | 5 | B | |
| | 4 | 0 | 0 | 0 | N/A | N/A | 10 | 13 | 191 | 5 | B | | | | 191 | 5 | B | |
| | 5 | 0 | 0 | 0 | N/A | N/A | 0 | 0 | 0 | N/A | N/A | | | | 0 | N/A | N/A | |
| | 6 | 0 | 0 | 0 | N/A | N/A | 0 | 0 | 0 | N/A | N/A | | | | 0 | N/A | N/A | |
| | 7 | 0 | 0 | 0 | N/A | N/A | 10 | 13 | 27 | 4 | B | | | | 27 | 4 | B | |
| | 8 | 0 | 0 | 0 | N/A | N/A | 10 | 13 | 187 | 5 | B | | | | 187 | 5 | B | |
| ***Blvd @ 34th St*** | 1 | 0 | 0 | 0 | N/A | N/A | 15 | 18 | 304 | 5 | B | | | | 304 | 5 | B | |
| | 2 | 0 | 0 | 0 | N/A | N/A | 10 | 13 | 58 | 4 | B | | | | 58 | 4 | B | |
| | 3 | 0 | 0 | 0 | N/A | N/A | 17 | 20 | 396 | 6 | B | | | | 396 | 6 | B | |
| | 4 | 0 | 0 | 0 | N/A | N/A | 17 | 20 | 234 | 5 | B | | | | 234 | 5 | B | |
| | 5 | 0 | 0 | 0 | N/A | N/A | 10 | 13 | 86 | 5 | B | | | | 86 | 5 | B | |
| | 6 | 0 | 0 | 0 | N/A | N/A | 10 | 13 | 120 | 5 | B | | | | 120 | 5 | B | |
| | 7 | 0 | 0 | 0 | N/A | N/A | 17 | 20 | 142 | 5 | B | | | | 142 | 5 | B | |
| | 8 | 0 | 0 | 0 | N/A | N/A | 26 | 30 | 465 | 5 | B | | | | 465 | 5 | B | |

# Appendix S.5.3

**Pedestrian Improvement Analysis - Sidewalks Level of Service**

**2010 Future Conditions (PM)**

| Intersection | Walkway Location | 2010 Future without the Proposed Action | | | | | 2010 Future with the Proposed Action | | | | | | 2010 Future with the Proposed Action (Improvement) | | | | | |
|---|---|---|---|---|---|---|---|---|---|---|---|---|---|---|---|---|---|---|
| | | Effective Walkway width | Actual walkway width | Sidewalk Volumes | Platoon Flow Rate (ped/min/ft) | Platoon Level of Service | Effective Walkway width | Actual walkway width | Sidewalk Volumes | Platoon Flow Rate (ped/min/ft) | Platoon Level of Service | Impact? | Proposed Effective Walkwa | Proposed Actual walkway width | Sidewalk Volumes | Platoon Flow Rate (ped/min/ft) | Platoon Level of Service | Still Impact? |
| ***Twelfth Ave @ 30th St*** | 1 | 0 | 0 | 0 | N/A | N/A | 0 | 0 | 0 | N/A | N/A | | | | 0 | N/A | N/A | |
| | 2 | 9 | 11 | 6 | 4 | B | 9 | 11 | 6 | 4 | B | | | | 6 | 4 | B | |
| | 3 | 10 | 13 | 2 | 4 | B | 10 | 13 | 2 | 4 | B | | | | 2 | 4 | B | |
| | 4 | 10 | 13 | 3 | 4 | B | 10 | 13 | 3 | 4 | B | | | | 3 | 4 | B | |
| | 5 | 12 | 15 | 2 | 4 | B | 12 | 15 | 2 | 4 | B | | | | 2 | 4 | B | |
| | 6 | 0 | 0 | 0 | N/A | N/A | 0 | 0 | 0 | N/A | N/A | | | | 0 | N/A | N/A | |
| | 7 | 0 | 0 | 0 | N/A | N/A | 0 | 0 | 0 | N/A | N/A | | | | 0 | N/A | N/A | |
| | 8 | 0 | 0 | 0 | N/A | N/A | 0 | 0 | 0 | N/A | N/A | | | | 0 | N/A | N/A | |
| ***Twelfth Ave @ 34th St*** | 1 | 0 | 0 | 0 | N/A | N/A | 0 | 0 | 0 | N/A | N/A | | | | 0 | N/A | N/A | |
| | 2 | 9 | 12 | 1 | 4 | B | 9 | 12 | 8 | 4 | B | | | | 8 | 4 | B | |
| | 3 | 15 | 18 | 19 | 4 | B | 15 | 18 | 21 | 4 | B | | | | 21 | 4 | B | |
| | 4 | 15 | 18 | 94 | 4 | B | 15 | 18 | 106 | 4 | B | | | | 106 | 4 | B | |
| | 5 | 9 | 12 | 0 | 4 | B | 9 | 12 | 0 | 4 | B | | | | 0 | 4 | B | |
| | 6 | 0 | 0 | 0 | N/A | N/A | 0 | 0 | 0 | N/A | N/A | | | | 0 | N/A | N/A | |
| | 7 | 0 | 0 | 0 | N/A | N/A | 0 | 0 | 0 | N/A | N/A | | | | 0 | N/A | N/A | |
| | 8 | 0 | 0 | 0 | N/A | N/A | 0 | 0 | 0 | N/A | N/A | | | | 0 | N/A | N/A | |
| ***Twelfth Ave @ 39th St*** | 1 | 0 | 0 | 0 | N/A | N/A | 0 | 0 | 0 | N/A | N/A | | | | 0 | N/A | N/A | |
| | 2 | 10 | 13 | 3 | 4 | B | 10 | 13 | 3 | 4 | B | | | | 3 | 4 | B | |
| | 3 | 10 | 13 | 0 | 4 | B | 0 | 0 | 0 | N/A | N/A | | | | 0 | N/A | N/A | |
| | 4 | 10 | 13 | 59 | 4 | B | 0 | 0 | 0 | N/A | N/A | | | | 0 | N/A | N/A | |
| | 5 | 15 | 18 | 4 | 4 | B | 15 | 18 | 11 | 4 | B | | | | 11 | 4 | B | |
| | 6 | 0 | 0 | 0 | N/A | N/A | 0 | 0 | 0 | N/A | N/A | | | | 0 | N/A | N/A | |
| | 7 | 0 | 0 | 0 | N/A | N/A | 0 | 0 | 0 | N/A | N/A | | | | 0 | N/A | N/A | |
| | 8 | 0 | 0 | 0 | N/A | N/A | 0 | 0 | 0 | N/A | N/A | | | | 0 | N/A | N/A | |
| ***Twelfth Ave @ 40th St*** | 1 | 0 | 0 | 0 | N/A | N/A | 0 | 0 | 0 | N/A | N/A | | | | 0 | N/A | N/A | |
| | 2 | 10 | 13 | 5 | 4 | B | 10 | 13 | 3 | 4 | B | | | | 3 | 4 | B | |
| | 3 | 9 | 11 | 3 | 4 | B | 0 | 0 | 3 | N/A | N/A | | | | 0 | N/A | N/A | |
| | 4 | 9 | 12 | 0 | 4 | B | 0 | 0 | 0 | N/A | N/A | | | | 0 | N/A | N/A | |
| | 5 | 11 | 14 | 1 | 4 | B | 11 | 14 | 1 | 4 | B | | | | 1 | 4 | B | |
| | 6 | 0 | 0 | 0 | N/A | N/A | 0 | 0 | 0 | N/A | N/A | | | | 0 | N/A | N/A | |
| | 7 | 0 | 0 | 0 | N/A | N/A | 0 | 0 | 0 | N/A | N/A | | | | 0 | N/A | N/A | |
| | 8 | 0 | 0 | 0 | N/A | N/A | 0 | 0 | 0 | N/A | N/A | | | | 0 | N/A | N/A | |
| ***Twelfth Ave @ 42nd St*** | 1 | 0 | 0 | 0 | N/A | N/A | 0 | 0 | 0 | N/A | N/A | | | | 0 | N/A | N/A | |
| | 2 | 17 | 20 | 27 | 4 | B | 17 | 20 | 29 | 4 | B | | | | 29 | 4 | B | |
| | 3 | 12 | 15 | 111 | 5 | B | 12 | 15 | 114 | 5 | B | | | | 114 | 5 | B | |
| | 4 | 23 | 26 | 111 | 4 | B | 23 | 26 | 111 | 4 | B | | | | 111 | 4 | B | |
| | 5 | 17 | 20 | 16 | 4 | B | 17 | 20 | 14 | 4 | B | | | | 14 | 4 | B | |
| | 6 | 0 | 0 | 0 | N/A | N/A | 0 | 0 | 0 | N/A | N/A | | | | 0 | N/A | N/A | |
| | 7 | 0 | 0 | 0 | N/A | N/A | 0 | 0 | 0 | N/A | N/A | | | | 0 | N/A | N/A | |
| | 8 | 0 | 0 | 0 | N/A | N/A | 0 | 0 | 0 | N/A | N/A | | | | 0 | N/A | N/A | |
| ***Eleventh Ave @ 29th St*** | 1 | 12 | 15 | 20 | 4 | B | 12 | 15 | 87 | 4 | B | | | | 87 | 4 | B | |
| | 2 | 12 | 15 | 37 | 4 | B | 12 | 15 | 123 | 5 | B | | | | 123 | 5 | B | |
| | 3 | 10 | 13 | 5 | 4 | B | 10 | 13 | 111 | 5 | B | | | | 111 | 5 | B | |
| | 4 | 10 | 13 | 9 | 4 | B | 10 | 13 | 14 | 4 | B | | | | 14 | 4 | B | |
| | 5 | 12 | 15 | 37 | 4 | B | 12 | 15 | 65 | 4 | B | | | | 65 | 4 | B | |
| | 6 | 12 | 15 | 17 | 4 | B | 12 | 15 | 32 | 4 | B | | | | 32 | 4 | B | |
| | 7 | 10 | 13 | 7 | 4 | B | 10 | 13 | 7 | 4 | B | | | | 7 | 4 | B | |
| | 8 | 10 | 13 | 4 | 4 | B | 10 | 13 | 4 | 4 | B | | | | 4 | 4 | B | |

# Appendix S.5.3

**Pedestrian Improvement Analysis - Sidewalks Level of Service**

**2010 Future Conditions (PM)**

| Intersection | Walkway Location | 2010 Future without the Proposed Action | | | | | 2010 Future with the Proposed Action | | | | | | 2010 Future with the Proposed Action (Improvement) | | | | | |
|---|---|---|---|---|---|---|---|---|---|---|---|---|---|---|---|---|---|---|
| | | Effective Walkway width | Actual walkway width | Sidewalk Volumes | Platoon Flow Rate (ped/min/ft) | Platoon Level of Service | Effective Walkway width | Actual walkway width | Sidewalk Volumes | Platoon Flow Rate (ped/min/ft) | Platoon Level of Service | Impact? | Proposed Effective Walkwa | Proposed Actual walkway width | Sidewalk Volumes | Platoon Flow Rate (ped/min/ft) | Platoon Level of Service | Still Impact? |
| ***Eleventh Ave @ 30th St*** | 1 | 12 | 15 | 14 | 4 | B | 12 | 15 | 77 | 4 | B | | | | 77 | 4 | B | |
| | 2 | 12 | 15 | 42 | 4 | B | 12 | 15 | 82 | 4 | B | | | | 82 | 4 | B | |
| | 3 | 10 | 13 | 28 | 4 | B | 10 | 13 | 56 | 4 | B | | | | 56 | 4 | B | |
| | 4 | 10 | 13 | 5 | 4 | B | 10 | 13 | 19 | 4 | B | | | | 19 | 4 | B | |
| | 5 | 12 | 15 | 57 | 4 | B | 12 | 15 | 144 | 5 | B | | | | 144 | 5 | B | |
| | 6 | 12 | 15 | 21 | 4 | B | 12 | 15 | 89 | 4 | B | | | | 89 | 4 | B | |
| | 7 | 10 | 13 | 5 | 4 | B | 10 | 13 | 5 | 4 | B | | | | 5 | 4 | B | |
| | 8 | 10 | 13 | 8 | 4 | B | 10 | 13 | 46 | 4 | B | | | | 46 | 4 | B | |
| ***Eleventh Ave @ 33rd St*** | 1 | 12 | 15 | 4 | 4 | B | 12 | 15 | 125 | 5 | B | | | | 125 | 5 | B | |
| | 2 | 12 | 15 | 60 | 4 | B | 12 | 15 | 111 | 5 | B | | | | 111 | 5 | B | |
| | 3 | 10 | 13 | 43 | 4 | B | 10 | 13 | 105 | 5 | B | | | | 105 | 5 | B | |
| | 4 | 10 | 13 | 3 | 4 | B | 10 | 13 | 65 | 4 | B | | | | 65 | 4 | B | |
| | 5 | 12 | 15 | 25 | 4 | B | 12 | 15 | 66 | 4 | B | | | | 66 | 4 | B | |
| | 6 | 12 | 15 | 3 | 4 | B | 12 | 15 | 29 | 4 | B | | | | 29 | 4 | B | |
| | 7 | 10 | 13 | 1 | 4 | B | 0 | 0 | 0 | N/A | N/A | | | | 0 | N/A | N/A | |
| | 8 | 10 | 13 | 0 | 4 | B | 0 | 0 | 0 | N/A | N/A | | | | 0 | N/A | N/A | |
| ***Eleventh Ave @ 34th St*** | 1 | 13 | 15 | 5 | 4 | B | 13 | 15 | 182 | 5 | B | | | | 182 | 5 | B | |
| | 2 | 9 | 12 | 42 | 4 | B | 14 | 17 | 166 | 5 | B | | | | 166 | 5 | B | |
| | 3 | 17 | 20 | 68 | 4 | B | 26 | 30 | 166 | 4 | B | | | | 166 | 4 | B | |
| | 4 | 17 | 20 | 60 | 4 | B | 17 | 20 | 255 | 5 | B | | | | 255 | 5 | B | |
| | 5 | 12 | 15 | 50 | 4 | B | 12 | 15 | 113 | 5 | B | | | | 113 | 5 | B | |
| | 6 | 12 | 15 | 6 | 4 | B | 12 | 15 | 167 | 5 | B | | | | 167 | 5 | B | |
| | 7 | 17 | 20 | 98 | 4 | B | 17 | 20 | 110 | 4 | B | | | | 110 | 4 | B | |
| | 8 | 17 | 20 | 25 | 4 | B | 17 | 20 | 27 | 4 | B | | | | 27 | 4 | B | |
| ***Eleventh Ave @ 35th St*** | 1 | 16 | 19 | 11 | 4 | B | 16 | 19 | 49 | 4 | B | | | | 49 | 4 | B | |
| | 2 | 14 | 15 | 28 | 4 | B | 14 | 15 | 110 | 5 | B | | | | 110 | 5 | B | |
| | 3 | 12 | 14 | 2 | 4 | B | 12 | 14 | 16 | 4 | B | | | | 16 | 4 | B | |
| | 4 | 12 | 14 | 0 | 4 | B | 17 | 19 | 58 | 4 | B | | | | 58 | 4 | B | |
| | 5 | 8 | 11 | 26 | 4 | B | 13 | 16 | 158 | 5 | B | | | | 158 | 5 | B | |
| | 6 | 12 | 15 | 8 | 4 | B | 12 | 15 | 185 | 5 | B | | | | 185 | 5 | B | |
| | 7 | 0 | 0 | 0 | N/A | N/A | 0 | 0 | 0 | N/A | N/A | | | | 0 | N/A | N/A | |
| | 8 | 0 | 0 | 0 | N/A | N/A | 0 | 0 | 0 | N/A | N/A | | | | 0 | N/A | N/A | |
| ***Eleventh Ave @ 36th St*** | 1 | 12 | 15 | 9 | 4 | B | 12 | 15 | 49 | 4 | B | | | | 49 | 4 | B | |
| | 2 | 7 | 9 | 28 | 4 | B | 7 | 9 | 78 | 5 | B | | | | 78 | 5 | B | |
| | 3 | 10 | 13 | 1 | 4 | B | 10 | 13 | 10 | 4 | B | | | | 10 | 4 | B | |
| | 4 | 8 | 10 | 4 | 4 | B | 8 | 10 | 13 | 4 | B | | | | 13 | 4 | B | |
| | 5 | 12 | 15 | 27 | 4 | B | 12 | 15 | 254 | 5 | B | | | | 254 | 5 | B | |
| | 6 | 13 | 17 | 11 | 4 | B | 13 | 17 | 49 | 4 | B | | | | 49 | 4 | B | |
| | 7 | 0 | 0 | 0 | N/A | N/A | 0 | 0 | 0 | N/A | N/A | | | | 0 | N/A | N/A | |
| | 8 | 0 | 0 | 0 | N/A | N/A | 0 | 0 | 0 | N/A | N/A | | | | 0 | N/A | N/A | |
| ***Eleventh Ave @ 37th St*** | 1 | 12 | 15 | 3 | 4 | B | 12 | 15 | 53 | 4 | B | | | | 53 | 4 | B | |
| | 2 | 7 | 10 | 33 | 4 | B | 7 | 10 | 54 | 5 | B | | | | 54 | 5 | B | |
| | 3 | 9 | 12 | 0 | 4 | B | 9 | 12 | 38 | 4 | B | | | | 38 | 4 | B | |
| | 4 | 9 | 12 | 1 | 4 | B | 9 | 12 | 10 | 4 | B | | | | 10 | 4 | B | |
| | 5 | 7 | 10 | 19 | 4 | B | 7 | 10 | 69 | 5 | B | | | | 69 | 5 | B | |
| | 6 | 12 | 15 | 7 | 4 | B | 12 | 15 | 49 | 4 | B | | | | 49 | 4 | B | |
| | 7 | 0 | 0 | 0 | N/A | N/A | 0 | 0 | 0 | N/A | N/A | | | | 0 | N/A | N/A | |
| | 8 | 0 | 0 | 0 | N/A | N/A | 0 | 0 | 0 | N/A | N/A | | | | 0 | N/A | N/A | |

# Appendix S.5.3

**Pedestrian Improvement Analysis - Sidewalks Level of Service**

**2010 Future Conditions (PM)**

| Intersection | Walkway Location | 2010 Future without the Proposed Action | | | | | 2010 Future with the Proposed Action | | | | | | 2010 Future with the Proposed Action (Improvement) | | | | | |
|---|---|---|---|---|---|---|---|---|---|---|---|---|---|---|---|---|---|---|
| | | Effective Walkway width | Actual walkway width | Sidewalk Volumes | Platoon Flow Rate (ped/min/ft) | Platoon Level of Service | Effective Walkway width | Actual walkway width | Sidewalk Volumes | Platoon Flow Rate (ped/min/ft) | Platoon Level of Service | Impact? | Proposed Effective Walkwa | Proposed Actual walkway width | Sidewalk Volumes | Platoon Flow Rate (ped/min/ft) | Platoon Level of Service | Still Impact? |
| ***Eleventh Ave @ 38th St*** | 1 | 12 | 15 | 1 | 4 | B | 12 | 15 | 61 | 4 | B | | | | 61 | 4 | B | |
| | 2 | 7 | 10 | 0 | 4 | B | 7 | 10 | 5 | 4 | B | | | | 5 | 4 | B | |
| | 3 | 8 | 11 | 0 | 4 | B | 8 | 11 | 25 | 4 | B | | | | 25 | 4 | B | |
| | 4 | 8 | 11 | 2 | 4 | B | 8 | 11 | 11 | 4 | B | | | | 11 | 4 | B | |
| | 5 | 7 | 10 | 16 | 4 | B | 7 | 10 | 36 | 4 | B | | | | 36 | 4 | B | |
| | 6 | 12 | 15 | 0 | 4 | B | 12 | 15 | 50 | 4 | B | | | | 50 | 4 | B | |
| | 7 | 0 | 0 | 0 | N/A | N/A | 0 | 0 | 0 | N/A | N/A | | | | 0 | N/A | N/A | |
| | 8 | 0 | 0 | 0 | N/A | N/A | 0 | 0 | 0 | N/A | N/A | | | | 0 | N/A | N/A | |
| ***Eleventh Ave @ 39th St*** | 1 | 11 | 14 | 4 | 4 | B | 11 | 14 | 70 | 4 | B | | | | 70 | 4 | B | |
| | 2 | 7 | 10 | 4 | 4 | B | 7 | 10 | 11 | 4 | B | | | | 11 | 4 | B | |
| | 3 | 9 | 12 | 1 | 4 | B | 9 | 12 | 10 | 4 | B | | | | 10 | 4 | B | |
| | 4 | 8 | 11 | 52 | 4 | B | 8 | 11 | 61 | 5 | B | | | | 61 | 5 | B | |
| | 5 | 7 | 10 | 0 | 4 | B | 7 | 10 | 7 | 4 | B | | | | 7 | 4 | B | |
| | 6 | 12 | 15 | 2 | 4 | B | 12 | 15 | 62 | 4 | B | | | | 62 | 4 | B | |
| | 7 | 10 | 13 | 53 | 4 | B | 0 | 0 | 0 | N/A | N/A | | | | 0 | N/A | N/A | |
| | 8 | 12 | 15 | 4 | 4 | B | 0 | 0 | 0 | N/A | N/A | | | | 0 | N/A | N/A | |
| ***Eleventh Ave @ 40th St*** | 1 | 12 | 15 | 76 | 4 | B | 12 | 15 | 155 | 5 | B | | | | 155 | 5 | B | |
| | 2 | 7 | 10 | 22 | 4 | B | 7 | 10 | 28 | 4 | B | | | | 28 | 4 | B | |
| | 3 | 10 | 13 | 0 | 4 | B | 10 | 13 | 33 | 4 | B | | | | 33 | 4 | B | |
| | 4 | 10 | 13 | 7 | 4 | B | 10 | 13 | 7 | 4 | B | | | | 7 | 4 | B | |
| | 5 | 7 | 10 | 16 | 4 | B | 7 | 10 | 22 | 4 | B | | | | 22 | 4 | B | |
| | 6 | 12 | 15 | 103 | 5 | B | 12 | 15 | 169 | 5 | B | | | | 169 | 5 | B | |
| | 7 | 10 | 13 | 1 | 4 | B | 0 | 0 | 0 | N/A | N/A | | | | 0 | N/A | N/A | |
| | 8 | 10 | 13 | 5 | 4 | B | 0 | 0 | 0 | N/A | N/A | | | | 0 | N/A | N/A | |
| ***Eleventh Ave @ 42nd St*** | 1 | 13 | 16 | 62 | 4 | B | 13 | 16 | 106 | 5 | B | | | | 106 | 5 | B | |
| | 2 | 13 | 16 | 13 | 4 | B | 13 | 16 | 35 | 4 | B | | | | 35 | 4 | B | |
| | 3 | 12 | 15 | 204 | 5 | B | 12 | 15 | 262 | 5 | B | | | | 262 | 5 | B | |
| | 4 | 12 | 15 | 141 | 5 | B | 12 | 15 | 266 | 5 | B | | | | 266 | 5 | B | |
| | 5 | 12 | 16 | 1 | 4 | B | 12 | 16 | 3 | 4 | B | | | | 3 | 4 | B | |
| | 6 | 12 | 15 | 69 | 4 | B | 12 | 15 | 73 | 4 | B | | | | 73 | 4 | B | |
| | 7 | 12 | 16 | 114 | 5 | B | 12 | 16 | 114 | 5 | B | | | | 114 | 5 | B | |
| | 8 | 12 | 16 | 130 | 5 | B | 12 | 16 | 218 | 5 | B | | | | 218 | 5 | B | |
| ***Tenth Ave @ 29th St*** | 1 | 12 | 15 | 58 | 4 | B | 12 | 15 | 77 | 4 | B | | | | 77 | 4 | B | |
| | 2 | 12 | 15 | 43 | 4 | B | 12 | 15 | 47 | 4 | B | | | | 47 | 4 | B | |
| | 3 | 10 | 13 | 45 | 4 | B | 10 | 13 | 46 | 4 | B | | | | 46 | 4 | B | |
| | 4 | 10 | 13 | 33 | 4 | B | 10 | 13 | 35 | 4 | B | | | | 35 | 4 | B | |
| | 5 | 12 | 15 | 43 | 4 | B | 12 | 15 | 44 | 4 | B | | | | 44 | 4 | B | |
| | 6 | 12 | 15 | 95 | 5 | B | 12 | 15 | 111 | 5 | B | | | | 111 | 5 | B | |
| | 7 | 10 | 13 | 41 | 4 | B | 10 | 13 | 45 | 4 | B | | | | 45 | 4 | B | |
| | 8 | 10 | 13 | 24 | 4 | B | 10 | 13 | 24 | 4 | B | | | | 24 | 4 | B | |
| ***Tenth Ave @ 30th St*** | 1 | 13 | 16 | 54 | 4 | B | 13 | 16 | 83 | 4 | B | | | | 83 | 4 | B | |
| | 2 | 12 | 15 | 51 | 4 | B | 12 | 15 | 64 | 4 | B | | | | 64 | 4 | B | |
| | 3 | 10 | 13 | 47 | 4 | B | 10 | 13 | 66 | 4 | B | | | | 66 | 4 | B | |
| | 4 | 12 | 15 | 30 | 4 | B | 12 | 15 | 40 | 4 | B | | | | 40 | 4 | B | |
| | 5 | 12 | 15 | 40 | 4 | B | 12 | 15 | 46 | 4 | B | | | | 46 | 4 | B | |
| | 6 | 12 | 15 | 71 | 4 | B | 12 | 15 | 93 | 5 | B | | | | 93 | 5 | B | |
| | 7 | 11 | 14 | 33 | 4 | B | 11 | 14 | 45 | 4 | B | | | | 45 | 4 | B | |
| | 8 | 11 | 14 | 40 | 4 | B | 11 | 14 | 87 | 5 | B | | | | 87 | 5 | B | |

# Appendix S.5.3

**Pedestrian Improvement Analysis - Sidewalks Level of Service**

**2010 Future Conditions (PM)**

| Intersection | Walkway Location | 2010 Future without the Proposed Action | | | | | 2010 Future with the Proposed Action | | | | | | 2010 Future with the Proposed Action (Improvement) | | | | | |
|---|---|---|---|---|---|---|---|---|---|---|---|---|---|---|---|---|---|---|
| | | Effective Walkway width | Actual walkway width | Sidewalk Volumes | Platoon Flow Rate (ped/min/ft) | Platoon Level of Service | Effective Walkway width | Actual walkway width | Sidewalk Volumes | Platoon Flow Rate (ped/min/ft) | Platoon Level of Service | Impact? | Proposed Effective Walkwa | Proposed Actual walkway width | Sidewalk Volumes | Platoon Flow Rate (ped/min/ft) | Platoon Level of Service | Still Impact? |
| ***Tenth Ave @ 31st St*** | 1 | 12 | 15 | 56 | 4 | B | 12 | 15 | 86 | 4 | B | | | | 86 | 4 | B | |
| | 2 | 12 | 15 | 46 | 4 | B | 12 | 15 | 69 | 4 | B | | | | 69 | 4 | B | |
| | 3 | 11 | 13 | 44 | 4 | B | 11 | 13 | 74 | 4 | B | | | | 74 | 4 | B | |
| | 4 | 11 | 13 | 16 | 4 | B | 11 | 13 | 29 | 4 | B | | | | 29 | 4 | B | |
| | 5 | 12 | 15 | 68 | 4 | B | 12 | 15 | 79 | 4 | B | | | | 79 | 4 | B | |
| | 6 | 12 | 15 | 67 | 4 | B | 12 | 15 | 96 | 5 | B | | | | 96 | 5 | B | |
| | 7 | 0 | 0 | 0 | N/A | N/A | 0 | 0 | 0 | N/A | N/A | | | | 0 | N/A | N/A | |
| | 8 | 0 | 0 | 0 | N/A | N/A | 0 | 0 | 0 | N/A | N/A | | | | 0 | N/A | N/A | |
| ***Tenth Ave @ 33rd St*** | 1 | 12 | 15 | 43 | 4 | B | 12 | 15 | 73 | 4 | B | | | | 73 | 4 | B | |
| | 2 | 12 | 15 | 50 | 4 | B | 12 | 15 | 77 | 4 | B | | | | 77 | 4 | B | |
| | 3 | 10 | 13 | 54 | 4 | B | 10 | 13 | 173 | 5 | B | | | | 173 | 5 | B | |
| | 4 | 10 | 13 | 105 | 5 | B | 10 | 13 | 258 | 6 | B | | | | 258 | 6 | B | |
| | 5 | 12 | 15 | 44 | 4 | B | 12 | 15 | 69 | 4 | B | | | | 69 | 4 | B | |
| | 6 | 12 | 15 | 40 | 4 | B | 12 | 15 | 106 | 5 | B | | | | 106 | 5 | B | |
| | 7 | 10 | 13 | 49 | 4 | B | 10 | 13 | 187 | 5 | B | | | | 187 | 5 | B | |
| | 8 | 10 | 13 | 58 | 4 | B | 10 | 13 | 190 | 5 | B | | | | 190 | 5 | B | |
| ***Tenth Ave @ 34th St*** | 1 | 12 | 15 | 55 | 4 | B | 12 | 15 | 89 | 4 | B | | | | 89 | 4 | B | |
| | 2 | 12 | 15 | 43 | 4 | B | 12 | 15 | 56 | 4 | B | | | | 56 | 4 | B | |
| | 3 | 17 | 20 | 104 | 4 | B | 17 | 20 | 238 | 5 | B | | | | 238 | 5 | B | |
| | 4 | 17 | 20 | 167 | 5 | B | 17 | 20 | 339 | 5 | B | | | | 339 | 5 | B | |
| | 5 | 12 | 15 | 75 | 4 | B | 12 | 15 | 103 | 5 | B | | | | 103 | 5 | B | |
| | 6 | 12 | 15 | 32 | 4 | B | 12 | 15 | 63 | 4 | B | | | | 63 | 4 | B | |
| | 7 | 17 | 20 | 135 | 5 | B | 17 | 20 | 379 | 5 | B | | | | 379 | 5 | B | |
| | 8 | 17 | 20 | 103 | 4 | B | 17 | 20 | 339 | 5 | B | | | | 339 | 5 | B | |
| ***Tenth Ave @ 35th St*** | 1 | 13 | 16 | 38 | 4 | B | 13 | 16 | 79 | 4 | B | | | | 79 | 4 | B | |
| | 2 | 13 | 15 | 68 | 4 | B | 13 | 15 | 82 | 4 | B | | | | 82 | 4 | B | |
| | 3 | 12 | 15 | 62 | 4 | B | 12 | 15 | 136 | 5 | B | | | | 136 | 5 | B | |
| | 4 | 7 | 9 | 1 | 4 | B | 7 | 9 | 131 | 5 | B | | | | 131 | 5 | B | |
| | 5 | 13 | 15 | 50 | 4 | B | 13 | 15 | 62 | 4 | B | | | | 62 | 4 | B | |
| | 6 | 11 | 15 | 38 | 4 | B | 11 | 15 | 72 | 4 | B | | | | 72 | 4 | B | |
| | 7 | 10 | 13 | 21 | 4 | B | 10 | 13 | 204 | 5 | B | | | | 204 | 5 | B | |
| | 8 | 12 | 14 | 43 | 4 | B | 12 | 14 | 97 | 5 | B | | | | 97 | 5 | B | |
| ***Tenth Ave @ 36th St*** | 1 | 12 | 15 | 34 | 4 | B | 12 | 15 | 66 | 4 | B | | | | 66 | 4 | B | |
| | 2 | 10 | 16 | 33 | 4 | B | 10 | 16 | 43 | 4 | B | | | | 43 | 4 | B | |
| | 3 | 9 | 12 | 18 | 4 | B | 9 | 12 | 29 | 4 | B | | | | 29 | 4 | B | |
| | 4 | 9 | 12 | 32 | 4 | B | 9 | 12 | 43 | 4 | B | | | | 43 | 4 | B | |
| | 5 | 12 | 15 | 40 | 4 | B | 12 | 15 | 54 | 4 | B | | | | 54 | 4 | B | |
| | 6 | 12 | 15 | 37 | 4 | B | 12 | 15 | 77 | 4 | B | | | | 77 | 4 | B | |
| | 7 | 9 | 12 | 24 | 4 | B | 9 | 12 | 33 | 4 | B | | | | 33 | 4 | B | |
| | 8 | 10 | 12 | 6 | 4 | B | 10 | 12 | 16 | 4 | B | | | | 16 | 4 | B | |
| ***Tenth Ave @ 37th St*** | 1 | 5 | 15 | 20 | 4 | B | 5 | 15 | 37 | 4 | B | | | | 37 | 4 | B | |
| | 2 | 5 | 15 | 30 | 4 | B | 5 | 15 | 55 | 5 | B | | | | 55 | 5 | B | |
| | 3 | 9 | 12 | 21 | 4 | B | 9 | 12 | 35 | 4 | B | | | | 35 | 4 | B | |
| | 4 | 9 | 12 | 17 | 4 | B | 9 | 12 | 31 | 4 | B | | | | 31 | 4 | B | |
| | 5 | 12 | 15 | 30 | 4 | B | 12 | 15 | 39 | 4 | B | | | | 39 | 4 | B | |
| | 6 | 12 | 15 | 19 | 4 | B | 12 | 15 | 52 | 4 | B | | | | 52 | 4 | B | |
| | 7 | 9 | 12 | 14 | 4 | B | 9 | 12 | 23 | 4 | B | | | | 23 | 4 | B | |
| | 8 | 9 | 12 | 19 | 4 | B | 9 | 12 | 30 | 4 | B | | | | 30 | 4 | B | |

# Appendix S.5.3

**Pedestrian Improvement Analysis - Sidewalks Level of Service**

**2010 Future Conditions (PM)**

| Intersection | Walkway Location | 2010 Future without the Proposed Action | | | | | 2010 Future with the Proposed Action | | | | | | 2010 Future with the Proposed Action (Improvement) | | | | | |
|---|---|---|---|---|---|---|---|---|---|---|---|---|---|---|---|---|---|---|
| | | Effective Walkway width | Actual walkway width | Sidewalk Volumes | Platoon Flow Rate (ped/min/ft) | Platoon Level of Service | Effective Walkway width | Actual walkway width | Sidewalk Volumes | Platoon Flow Rate (ped/min/ft) | Platoon Level of Service | Impact? | Proposed Effective Walkwa | Proposed Actual walkway width | Sidewalk Volumes | Platoon Flow Rate (ped/min/ft) | Platoon Level of Service | Still Impact? |
| ***Tenth Ave @ 38th St*** | 1 | 12 | 15 | 21 | 4 | B | 12 | 15 | 33 | 4 | B | | | | 33 | 4 | B | |
| | 2 | 12 | 15 | 23 | 4 | B | 12 | 15 | 40 | 4 | B | | | | 40 | 4 | B | |
| | 3 | 9 | 12 | 18 | 4 | B | 9 | 12 | 30 | 4 | B | | | | 30 | 4 | B | |
| | 4 | 9 | 12 | 16 | 4 | B | 9 | 12 | 30 | 4 | B | | | | 30 | 4 | B | |
| | 5 | 12 | 15 | 27 | 4 | B | 12 | 15 | 36 | 4 | B | | | | 36 | 4 | B | |
| | 6 | 12 | 15 | 20 | 4 | B | 12 | 15 | 37 | 4 | B | | | | 37 | 4 | B | |
| | 7 | 9 | 12 | 15 | 4 | B | 9 | 12 | 25 | 4 | B | | | | 25 | 4 | B | |
| | 8 | 9 | 12 | 33 | 4 | B | 9 | 12 | 42 | 4 | B | | | | 42 | 4 | B | |
| ***Tenth Ave @ 39th St*** | 1 | 12 | 15 | 17 | 4 | B | 12 | 15 | 25 | 4 | B | | | | 25 | 4 | B | |
| | 2 | 12 | 15 | 26 | 4 | B | 12 | 15 | 46 | 4 | B | | | | 46 | 4 | B | |
| | 3 | 9 | 12 | 32 | 4 | B | 9 | 12 | 44 | 4 | B | | | | 44 | 4 | B | |
| | 4 | 9 | 12 | 39 | 4 | B | 9 | 12 | 54 | 4 | B | | | | 54 | 4 | B | |
| | 5 | 12 | 15 | 35 | 4 | B | 12 | 15 | 52 | 4 | B | | | | 52 | 4 | B | |
| | 6 | 12 | 15 | 19 | 4 | B | 12 | 15 | 32 | 4 | B | | | | 32 | 4 | B | |
| | 7 | 10 | 13 | 36 | 4 | B | 10 | 13 | 44 | 4 | B | | | | 44 | 4 | B | |
| | 8 | 7 | 10 | 30 | 4 | B | 7 | 10 | 39 | 4 | B | | | | 39 | 4 | B | |
| ***Tenth Ave @ 40th St*** | 1 | 12 | 15 | 33 | 4 | B | 12 | 15 | 40 | 4 | B | | | | 40 | 4 | B | |
| | 2 | 12 | 15 | 52 | 4 | B | 12 | 15 | 137 | 5 | B | | | | 137 | 5 | B | |
| | 3 | 9 | 12 | 37 | 4 | B | 9 | 12 | 88 | 5 | B | | | | 88 | 5 | B | |
| | 4 | 9 | 12 | 11 | 4 | B | 9 | 12 | 55 | 4 | B | | | | 55 | 4 | B | |
| | 5 | 12 | 15 | 38 | 4 | B | 12 | 15 | 58 | 4 | B | | | | 58 | 4 | B | |
| | 6 | 12 | 15 | 35 | 4 | B | 12 | 15 | 42 | 4 | B | | | | 42 | 4 | B | |
| | 7 | 10 | 13 | 4 | 4 | B | 10 | 13 | 4 | 4 | B | | | | 4 | 4 | B | |
| | 8 | 10 | 13 | 15 | 4 | B | 10 | 13 | 49 | 4 | B | | | | 49 | 4 | B | |
| ***Tenth Ave @ 41st St*** | 1 | 12 | 15 | 36 | 4 | B | 12 | 15 | 38 | 4 | B | | | | 38 | 4 | B | |
| | 2 | 14 | 16 | 82 | 4 | B | 14 | 16 | 212 | 5 | B | | | | 212 | 5 | B | |
| | 3 | 8 | 10 | 62 | 5 | B | 8 | 10 | 146 | 5 | B | | | | 146 | 5 | B | |
| | 4 | 12 | 14 | 26 | 4 | B | 12 | 14 | 50 | 4 | B | | | | 50 | 4 | B | |
| | 5 | 13 | 16 | 62 | 4 | B | 13 | 16 | 148 | 5 | B | | | | 148 | 5 | B | |
| | 6 | 8 | 10 | 40 | 4 | B | 8 | 10 | 47 | 4 | B | | | | 47 | 4 | B | |
| | 7 | 13 | 17 | 11 | 4 | B | 13 | 17 | 26 | 4 | B | | | | 26 | 4 | B | |
| | 8 | 9 | 12 | 47 | 4 | B | 9 | 12 | 80 | 5 | B | | | | 80 | 5 | B | |
| ***Tenth Ave @ 42nd St*** | 1 | 17 | 20 | 66 | 4 | B | 17 | 20 | 74 | 4 | B | | | | 74 | 4 | B | |
| | 2 | 17 | 22 | 102 | 4 | B | 17 | 22 | 130 | 5 | B | | | | 130 | 5 | B | |
| | 3 | 18 | 21 | 317 | 5 | B | 18 | 21 | 441 | 6 | B | | | | 441 | 6 | B | |
| | 4 | 12 | 20 | 225 | 5 | B | 12 | 20 | 601 | 7 | B | | | | 601 | 7 | B | |
| | 5 | 8 | 16 | 62 | 5 | B | 8 | 16 | 91 | 5 | B | | | | 91 | 5 | B | |
| | 6 | 13 | 16 | 48 | 4 | B | 13 | 16 | 50 | 4 | B | | | | 50 | 4 | B | |
| | 7 | 13 | 15 | 154 | 5 | B | 13 | 15 | 276 | 5 | B | | | | 276 | 5 | B | |
| | 8 | 13 | 15 | 298 | 6 | B | 13 | 15 | 358 | 6 | B | | | | 358 | 6 | B | |
| ***Dyer @ 42nd St*** | 1 | 0 | 0 | 0 | N/A | N/A | 0 | 0 | 0 | N/A | N/A | | | | 0 | N/A | N/A | |
| | 2 | 0 | 0 | 0 | N/A | N/A | 0 | 0 | 0 | N/A | N/A | | | | 0 | N/A | N/A | |
| | 3 | 19 | 21 | 269 | 5 | B | 19 | 21 | 269 | 5 | B | | | | 269 | 5 | B | |
| | 4 | 18 | 20 | 129 | 4 | B | 18 | 20 | 149 | 5 | B | | | | 149 | 5 | B | |
| | 5 | 6 | 6 | 16 | 4 | B | 6 | 6 | 16 | 4 | B | | | | 16 | 4 | B | |
| | 6 | 2 | 4 | 4 | 4 | B | 2 | 4 | 4 | 4 | B | | | | 4 | 4 | B | |
| | 7 | 18 | 20 | 120 | 4 | B | 18 | 20 | 140 | 5 | B | | | | 140 | 5 | B | |
| | 8 | 19 | 21 | 224 | 5 | B | 19 | 21 | 224 | 5 | B | | | | 224 | 5 | B | |

# Appendix S.5.3

**Pedestrian Improvement Analysis - Sidewalks Level of Service**

**2010 Future Conditions (PM)**

| Intersection | Walkway Location | 2010 Future without the Proposed Action | | | | | 2010 Future with the Proposed Action | | | | | | 2010 Future with the Proposed Action (Improvement) | | | | | |
|---|---|---|---|---|---|---|---|---|---|---|---|---|---|---|---|---|---|---|
| | | Effective Walkway width | Actual walkway width | Sidewalk Volumes | Platoon Flow Rate (ped/min/ft) | Platoon Level of Service | Effective Walkway width | Actual walkway width | Sidewalk Volumes | Platoon Flow Rate (ped/min/ft) | Platoon Level of Service | Impact? | Proposed Effective Walkwa | Proposed Actual walkway width | Sidewalk Volumes | Platoon Flow Rate (ped/min/ft) | Platoon Level of Service | Still Impact? |
| ***Ninth Ave @ 30th St*** | 1 | 14 | 16 | 111 | 5 | B | 14 | 16 | 113 | 5 | B | | | | 113 | 5 | B | |
| | 2 | 8 | 15 | 209 | 6 | B | 8 | 15 | 211 | 6 | B | | | | 211 | 6 | B | |
| | 3 | 6 | 13 | 51 | 5 | B | 6 | 13 | 65 | 5 | B | | | | 65 | 5 | B | |
| | 4 | 10 | 13 | 70 | 4 | B | 10 | 13 | 79 | 5 | B | | | | 79 | 5 | B | |
| | 5 | 13 | 16 | 138 | 5 | B | 13 | 16 | 138 | 5 | B | | | | 138 | 5 | B | |
| | 6 | 13 | 16 | 118 | 5 | B | 13 | 16 | 119 | 5 | B | | | | 119 | 5 | B | |
| | 7 | 11 | 14 | 110 | 5 | B | 11 | 14 | 120 | 5 | B | | | | 120 | 5 | B | |
| | 8 | 10 | 12 | 55 | 4 | B | 10 | 12 | 74 | 4 | B | | | | 74 | 4 | B | |
| ***Ninth Ave @ 31st St*** | 1 | 12 | 15 | 54 | 4 | B | 12 | 15 | 56 | 4 | B | | | | 56 | 4 | B | |
| | 2 | 10 | 13 | 78 | 5 | B | 10 | 13 | 84 | 5 | B | | | | 84 | 5 | B | |
| | 3 | 10 | 13 | 220 | 5 | B | 10 | 13 | 242 | 6 | B | | | | 242 | 6 | B | |
| | 4 | 10 | 13 | 122 | 5 | B | 10 | 13 | 134 | 5 | B | | | | 134 | 5 | B | |
| | 5 | 12 | 15 | 238 | 5 | B | 12 | 15 | 241 | 5 | B | | | | 241 | 5 | B | |
| | 6 | 12 | 15 | 97 | 5 | B | 12 | 15 | 100 | 5 | B | | | | 100 | 5 | B | |
| | 7 | 10 | 13 | 67 | 4 | B | 10 | 13 | 78 | 5 | B | | | | 78 | 5 | B | |
| | 8 | 10 | 13 | 37 | 4 | B | 10 | 13 | 59 | 4 | B | | | | 59 | 4 | B | |
| ***Ninth Ave @ 33rd St*** | 1 | 12 | 15 | 197 | 5 | B | 12 | 15 | 210 | 5 | B | | | | 210 | 5 | B | |
| | 2 | 12 | 15 | 185 | 5 | B | 12 | 15 | 194 | 5 | B | | | | 194 | 5 | B | |
| | 3 | 10 | 13 | 39 | 4 | B | 10 | 13 | 75 | 5 | B | | | | 75 | 5 | B | |
| | 4 | 10 | 13 | 418 | 7 | B | 10 | 13 | 641 | 8 | C | | | | 641 | 8 | C | |
| | 5 | 12 | 15 | 43 | 4 | B | 12 | 15 | 49 | 4 | B | | | | 49 | 4 | B | |
| | 6 | 12 | 15 | 62 | 4 | B | 12 | 15 | 65 | 4 | B | | | | 65 | 4 | B | |
| | 7 | 10 | 13 | 148 | 5 | B | 10 | 13 | 286 | 6 | B | | | | 286 | 6 | B | |
| | 8 | 10 | 13 | 51 | 4 | B | 10 | 13 | 170 | 5 | B | | | | 170 | 5 | B | |
| ***Ninth Ave @ 34th St*** | 1 | 11 | 15 | 274 | 6 | B | 11 | 15 | 282 | 6 | B | | | | 282 | 6 | B | |
| | 2 | 12 | 15 | 292 | 6 | B | 12 | 15 | 297 | 6 | B | | | | 297 | 6 | B | |
| | 3 | 19 | 23 | 368 | 5 | B | 19 | 23 | 502 | 6 | B | | | | 502 | 6 | B | |
| | 4 | 19 | 23 | 366 | 5 | B | 19 | 23 | 508 | 6 | B | | | | 508 | 6 | B | |
| | 5 | 12 | 15 | 325 | 6 | B | 12 | 15 | 334 | 6 | B | | | | 334 | 6 | B | |
| | 6 | 12 | 15 | 284 | 6 | B | 12 | 15 | 297 | 6 | B | | | | 297 | 6 | B | |
| | 7 | 16 | 20 | 275 | 5 | B | 16 | 20 | 447 | 6 | B | | | | 447 | 6 | B | |
| | 8 | 15 | 20 | 197 | 5 | B | 15 | 20 | 330 | 5 | B | | | | 330 | 5 | B | |
| ***Ninth Ave @ 37th St*** | 1 | 12 | 15 | 307 | 6 | B | 12 | 15 | 314 | 6 | B | | | | 314 | 6 | B | |
| | 2 | 12 | 15 | 245 | 5 | B | 12 | 15 | 248 | 5 | B | | | | 248 | 5 | B | |
| | 3 | 9 | 12 | 131 | 5 | B | 9 | 12 | 143 | 5 | B | | | | 143 | 5 | B | |
| | 4 | 9 | 12 | 65 | 4 | B | 9 | 12 | 77 | 5 | B | | | | 77 | 5 | B | |
| | 5 | 10 | 15 | 277 | 6 | B | 10 | 15 | 281 | 6 | B | | | | 281 | 6 | B | |
| | 6 | 12 | 15 | 273 | 6 | B | 12 | 15 | 277 | 6 | B | | | | 277 | 6 | B | |
| | 7 | 6 | 12 | 66 | 5 | B | 6 | 12 | 79 | 5 | B | | | | 79 | 5 | B | |
| | 8 | 9 | 12 | 83 | 5 | B | 9 | 12 | 96 | 5 | B | | | | 96 | 5 | B | |
| ***Ninth Ave @ 38th St*** | 1 | 10 | 15 | 119 | 5 | B | 10 | 15 | 110 | 5 | B | | | | 110 | 5 | B | |
| | 2 | 8 | 15 | 118 | 5 | B | 8 | 15 | 123 | 5 | B | | | | 123 | 5 | B | |
| | 3 | 8 | 11 | 88 | 5 | B | 8 | 11 | 112 | 5 | B | | | | 112 | 5 | B | |
| | 4 | 8 | 11 | 25 | 4 | B | 8 | 11 | 43 | 4 | B | | | | 43 | 4 | B | |
| | 5 | 10 | 15 | 172 | 5 | B | 10 | 15 | 173 | 5 | B | | | | 173 | 5 | B | |
| | 6 | 12 | 15 | 90 | 5 | B | 12 | 15 | 116 | 5 | B | | | | 116 | 5 | B | |
| | 7 | 8 | 11 | 22 | 4 | B | 8 | 11 | 34 | 4 | B | | | | 34 | 4 | B | |
| | 8 | 8 | 11 | 38 | 4 | B | 8 | 11 | 48 | 4 | B | | | | 48 | 4 | B | |

# Appendix S.5.3

**Pedestrian Improvement Analysis - Sidewalks Level of Service**

**2010 Future Conditions (PM)**

| Intersection | Walkway Location | 2010 Future without the Proposed Action | | | | | 2010 Future with the Proposed Action | | | | | | 2010 Future with the Proposed Action (Improvement) | | | | | |
|---|---|---|---|---|---|---|---|---|---|---|---|---|---|---|---|---|---|---|
| | | Effective Walkway width | Actual walkway width | Sidewalk Volumes | Platoon Flow Rate (ped/min/ft) | Platoon Level of Service | Effective Walkway width | Actual walkway width | Sidewalk Volumes | Platoon Flow Rate (ped/min/ft) | Platoon Level of Service | Impact? | Proposed Effective Walkwa | Proposed Actual walkway width | Sidewalk Volumes | Platoon Flow Rate (ped/min/ft) | Platoon Level of Service | Still Impact? |
| ***Ninth Ave @ 39th St*** | 1 | 8 | 15 | 142 | 5 | B | 8 | 15 | 142 | 5 | B | | | | 142 | 5 | B | |
| | 2 | 11 | 15 | 286 | 6 | B | 11 | 15 | 289 | 6 | B | | | | 289 | 6 | B | |
| | 3 | 9 | 12 | 78 | 5 | B | 9 | 12 | 86 | 5 | B | | | | 86 | 5 | B | |
| | 4 | 9 | 12 | 83 | 5 | B | 9 | 12 | 96 | 5 | B | | | | 96 | 5 | B | |
| | 5 | 10 | 15 | 285 | 6 | B | 10 | 15 | 290 | 6 | B | | | | 290 | 6 | B | |
| | 6 | 12 | 15 | 154 | 5 | B | 12 | 15 | 138 | 5 | B | | | | 138 | 5 | B | |
| | 7 | 9 | 12 | 45 | 4 | B | 9 | 12 | 57 | 4 | B | | | | 57 | 4 | B | |
| | 8 | 9 | 12 | 52 | 4 | B | 9 | 12 | 63 | 4 | B | | | | 63 | 4 | B | |
| ***Ninth Ave @ 42nd St*** | 1 | 13 | 16 | 352 | 6 | B | 13 | 16 | 366 | 6 | B | | | | 366 | 6 | B | |
| | 2 | 8 | 10 | 337 | 7 | B | 8 | 10 | 342 | 7 | B | | | | 342 | 7 | B | |
| | 3 | 8 | 11 | 501 | 8 | C | 8 | 11 | 641 | 9 | C | | | | 641 | 9 | C | |
| | 4 | 12 | 19 | 428 | 6 | B | 12 | 19 | 693 | 8 | C | | | | 693 | 8 | C | |
| | 5 | 8 | 14 | 350 | 7 | B | 8 | 14 | 352 | 7 | B | | | | 352 | 7 | B | |
| | 6 | 8 | 15 | 185 | 6 | B | 8 | 15 | 186 | 6 | B | | | | 186 | 6 | B | |
| | 7 | 13 | 20 | 276 | 5 | B | 13 | 20 | 661 | 7 | B | | | | 661 | 7 | B | |
| | 8 | 18 | 21 | 415 | 6 | B | 18 | 21 | 538 | 6 | B | | | | 538 | 6 | B | |
| ***Eighth Ave @ 30th St*** | 1 | 11 | 14 | 270 | 6 | B | 11 | 14 | 270 | 6 | B | | | | 270 | 6 | B | |
| | 2 | 11 | 15 | 420 | 7 | B | 11 | 15 | 423 | 7 | B | | | | 423 | 7 | B | |
| | 3 | 9 | 13 | 145 | 5 | B | 9 | 13 | 156 | 5 | B | | | | 156 | 5 | B | |
| | 4 | 11 | 14 | 55 | 4 | B | 11 | 14 | 66 | 4 | B | | | | 66 | 4 | B | |
| | 5 | 12 | 15 | 285 | 6 | B | 12 | 15 | 285 | 6 | B | | | | 285 | 6 | B | |
| | 6 | 11 | 14 | 219 | 5 | B | 11 | 14 | 219 | 5 | B | | | | 219 | 5 | B | |
| | 7 | 10 | 14 | 64 | 4 | B | 10 | 14 | 72 | 4 | B | | | | 72 | 4 | B | |
| | 8 | 10 | 13 | 75 | 5 | B | 10 | 13 | 89 | 5 | B | | | | 89 | 5 | B | |
| ***Eighth Ave @ 31st St*** | 1 | 12 | 16 | 279 | 6 | B | 12 | 16 | 281 | 6 | B | | | | 281 | 6 | B | |
| | 2 | 18 | 24 | 212 | 5 | B | 18 | 24 | 213 | 5 | B | | | | 213 | 5 | B | |
| | 3 | 35 | 49 | 312 | 5 | B | 35 | 49 | 324 | 5 | B | | | | 324 | 5 | B | |
| | 4 | 10 | 14 | 48 | 4 | B | 10 | 14 | 59 | 4 | B | | | | 59 | 4 | B | |
| | 5 | 12 | 15 | 165 | 5 | B | 12 | 15 | 167 | 5 | B | | | | 167 | 5 | B | |
| | 6 | 12 | 15 | 152 | 5 | B | 12 | 15 | 154 | 5 | B | | | | 154 | 5 | B | |
| | 7 | 10 | 13 | 127 | 5 | B | 10 | 13 | 140 | 5 | B | | | | 140 | 5 | B | |
| | 8 | 21 | 24 | 228 | 5 | B | 21 | 24 | 246 | 5 | B | | | | 246 | 5 | B | |
| ***Eighth Ave @ 33rd St*** | 1 | 12 | 15 | 977 | 9 | C | 12 | 15 | 983 | 9 | C | | | | 983 | 9 | C | |
| | 2 | 12 | 19 | 436 | 6 | B | 12 | 19 | 475 | 7 | B | | | | 475 | 7 | B | |
| | 3 | 10 | 17 | 393 | 7 | B | 10 | 17 | 413 | 7 | B | | | | 413 | 7 | B | |
| | 4 | 30 | 43 | 705 | 6 | B | 30 | 43 | 718 | 6 | B | | | | 718 | 6 | B | |
| | 5 | 30 | 43 | 517 | 5 | B | 30 | 43 | 578 | 5 | B | | | | 578 | 5 | B | |
| | 6 | 12 | 16 | 400 | 6 | B | 12 | 16 | 401 | 6 | B | | | | 401 | 6 | B | |
| | 7 | 13 | 24 | 808 | 8 | C | 13 | 24 | 939 | 9 | C | | | | 939 | 9 | C | |
| | 8 | 7 | 14 | 223 | 6 | B | 7 | 14 | 260 | 6 | B | | | | 260 | 6 | B | |
| ***Eighth Ave @ 34th St*** | 1 | 11 | 15 | 456 | 7 | B | 11 | 15 | 463 | 7 | B | | | | 463 | 7 | B | |
| | 2 | 11 | 15 | 265 | 6 | B | 11 | 15 | 329 | 6 | B | | | | 329 | 6 | B | |
| | 3 | 19 | 22 | 404 | 5 | B | 19 | 22 | 462 | 6 | B | | | | 462 | 6 | B | |
| | 4 | 19 | 22 | 285 | 5 | B | 19 | 22 | 394 | 5 | B | | | | 394 | 5 | B | |
| | 5 | 12 | 15 | 241 | 5 | B | 12 | 15 | 308 | 6 | B | | | | 308 | 6 | B | |
| | 6 | 11 | 15 | 593 | 8 | C | 11 | 15 | 600 | 8 | C | | | | 600 | 8 | C | |
| | 7 | 12 | 22 | 221 | 5 | B | 12 | 22 | 362 | 6 | B | | | | 362 | 6 | B | |
| | 8 | 18 | 22 | 395 | 5 | B | 18 | 22 | 529 | 6 | B | | | | 529 | 6 | B | |

# Appendix S.5.3

**Pedestrian Improvement Analysis - Sidewalks Level of Service**

**2010 Future Conditions (PM)**

| Intersection | Walkway Location | 2010 Future without the Proposed Action | | | | | 2010 Future with the Proposed Action | | | | | | 2010 Future with the Proposed Action (Improvement) | | | | | |
|---|---|---|---|---|---|---|---|---|---|---|---|---|---|---|---|---|---|---|
| | | Effective Walkway width | Actual walkway width | Sidewalk Volumes | Platoon Flow Rate (ped/min/ft) | Platoon Level of Service | Effective Walkway width | Actual walkway width | Sidewalk Volumes | Platoon Flow Rate (ped/min/ft) | Platoon Level of Service | Impact? | Proposed Effective Walkwa | Proposed Actual walkway width | Sidewalk Volumes | Platoon Flow Rate (ped/min/ft) | Platoon Level of Service | Still Impact? |
| ***Eighth Ave @ 37th St*** | 1 | 8 | 15 | 456 | 8 | C | 8 | 15 | 461 | 8 | C | | | | 461 | 8 | C | |
| | 2 | 12 | 15 | 736 | 8 | C | 12 | 15 | 739 | 8 | C | | | | 739 | 8 | C | |
| | 3 | 9 | 12 | 130 | 5 | B | 9 | 12 | 140 | 5 | B | | | | 140 | 5 | B | |
| | 4 | 6 | 12 | 127 | 5 | B | 6 | 12 | 137 | 6 | B | | | | 137 | 6 | B | |
| | 5 | 9 | 15 | 522 | 8 | C | 9 | 15 | 526 | 8 | C | | | | 526 | 8 | C | |
| | 6 | 9 | 15 | 658 | 9 | C | 9 | 15 | 662 | 9 | C | | | | 662 | 9 | C | |
| | 7 | 5 | 12 | 159 | 6 | B | 5 | 12 | 170 | 6 | B | | | | 170 | 6 | B | |
| | 8 | 10 | 13 | 72 | 4 | B | 10 | 13 | 83 | 5 | B | | | | 83 | 5 | B | |
| ***Eighth Ave @ 38th St*** | 1 | 8 | 15 | 518 | 8 | C | 8 | 15 | 526 | 8 | C | | | | 526 | 8 | C | |
| | 2 | 10 | 15 | 412 | 7 | B | 10 | 15 | 420 | 7 | B | | | | 420 | 7 | B | |
| | 3 | 5 | 12 | 100 | 5 | B | 5 | 12 | 117 | 6 | B | | | | 117 | 6 | B | |
| | 4 | 9 | 12 | 44 | 4 | B | 9 | 12 | 54 | 4 | B | | | | 54 | 4 | B | |
| | 5 | 8 | 15 | 676 | 10 | C | 8 | 15 | 679 | 10 | C | | | | 679 | 10 | C | |
| | 6 | 10 | 15 | 437 | 7 | B | 10 | 15 | 441 | 7 | B | | | | 441 | 7 | B | |
| | 7 | 8 | 11 | 4 | 4 | B | 8 | 11 | 22 | 4 | B | | | | 22 | 4 | B | |
| | 8 | 8 | 11 | 47 | 4 | B | 8 | 11 | 72 | 5 | B | | | | 72 | 5 | B | |
| ***Eighth Ave @ 39th St*** | 1 | 12 | 15 | 867 | 9 | C | 12 | 15 | 885 | 9 | C | | | | 885 | 9 | C | |
| | 2 | 11 | 15 | 1210 | 11 | D | 11 | 15 | 1220 | 11 | D | | | | 1220 | 11 | D | |
| | 3 | 8 | 12 | 162 | 5 | B | 8 | 12 | 173 | 5 | B | | | | 173 | 5 | B | |
| | 4 | 9 | 12 | 227 | 6 | B | 9 | 12 | 241 | 6 | B | | | | 241 | 6 | B | |
| | 5 | 12 | 15 | 815 | 9 | C | 12 | 15 | 824 | 9 | C | | | | 824 | 9 | C | |
| | 6 | 12 | 15 | 975 | 9 | C | 12 | 15 | 984 | 9 | C | | | | 984 | 9 | C | |
| | 7 | 9 | 12 | 125 | 5 | B | 9 | 12 | 155 | 5 | B | | | | 155 | 5 | B | |
| | 8 | 9 | 12 | 153 | 5 | B | 9 | 12 | 161 | 5 | B | | | | 161 | 5 | B | |
| ***Eighth Ave @ 42nd St*** | 1 | 7 | 15 | 1682 | 20 | E | 7 | 15 | 1686 | 20 | E | | | | 1686 | 20 | E | |
| | 2 | 16 | 16 | 764 | 7 | B | 16 | 16 | 768 | 7 | B | | | | 768 | 7 | B | |
| | 3 | 15 | 23 | 535 | 6 | B | 15 | 23 | 635 | 7 | B | | | | 635 | 7 | B | |
| | 4 | 14 | 16 | 1826 | 13 | D | 14 | 16 | 1967 | 13 | D | | | | 1967 | 13 | D | |
| | 5 | 7 | 12 | 1155 | 15 | D | 7 | 12 | 1156 | 15 | D | | | | 1156 | 15 | D | |
| | 6 | 12 | 29 | 1744 | 14 | D | 12 | 29 | 1750 | 14 | D | | | | 1750 | 14 | D | |
| | 7 | 12 | 34 | 834 | 9 | C | 12 | 34 | 1076 | 10 | C | | | | 1076 | 10 | C | |
| | 8 | 12 | 20 | 944 | 9 | C | 12 | 20 | 1084 | 10 | C | | | | 1084 | 10 | C | |
| ***Seventh Ave @ 31st St*** | 1 | 19 | 23 | 725 | 7 | B | 19 | 23 | 725 | 7 | B | | | | 725 | 7 | B | |
| | 2 | 19 | 23 | 657 | 6 | B | 19 | 23 | 658 | 6 | B | | | | 658 | 6 | B | |
| | 3 | 10 | 13 | 683 | 9 | C | 10 | 13 | 693 | 9 | C | | | | 693 | 9 | C | |
| | 4 | 10 | 13 | 563 | 8 | C | 10 | 13 | 571 | 8 | C | | | | 571 | 8 | C | |
| | 5 | 17 | 20 | 639 | 7 | B | 17 | 20 | 639 | 7 | B | | | | 639 | 7 | B | |
| | 6 | 16 | 20 | 519 | 6 | B | 16 | 20 | 519 | 6 | B | | | | 519 | 6 | B | |
| | 7 | 10 | 13 | 412 | 7 | B | 10 | 13 | 421 | 7 | B | | | | 421 | 7 | B | |
| | 8 | 15 | 18 | 485 | 6 | B | 15 | 18 | 497 | 6 | B | | | | 497 | 6 | B | |
| ***Seventh Ave @ 33rd St*** | 1 | 16 | 20 | 625 | 7 | B | 16 | 20 | 630 | 7 | B | | | | 630 | 7 | B | |
| | 2 | 15 | 20 | 700 | 7 | B | 15 | 20 | 701 | 7 | B | | | | 701 | 7 | B | |
| | 3 | 7 | 13 | 590 | 10 | C | 7 | 13 | 602 | 10 | C | | | | 602 | 10 | C | |
| | 4 | 10 | 13 | 613 | 8 | C | 10 | 13 | 628 | 8 | C | | | | 628 | 8 | C | |
| | 5 | 15 | 20 | 529 | 6 | B | 15 | 20 | 529 | 6 | B | | | | 529 | 6 | B | |
| | 6 | 37 | 40 | 699 | 5 | B | 37 | 40 | 699 | 5 | B | | | | 699 | 5 | B | |
| | 7 | 37 | 40 | 709 | 5 | B | 37 | 40 | 722 | 5 | B | | | | 722 | 5 | B | |
| | 8 | 9 | 15 | 572 | 8 | C | 9 | 15 | 591 | 8 | C | | | | 591 | 8 | C | |

# Appendix S.5.3

**Pedestrian Improvement Analysis - Sidewalks Level of Service**

**2010 Future Conditions (PM)**

| Intersection | Walkway Location | 2010 Future without the Proposed Action | | | | | 2010 Future with the Proposed Action | | | | | | 2010 Future with the Proposed Action (Improvement) | | | | | |
|---|---|---|---|---|---|---|---|---|---|---|---|---|---|---|---|---|---|---|
| | | Effective Walkway width | Actual walkway width | Sidewalk Volumes | Platoon Flow Rate (ped/min/ft) | Platoon Level of Service | Effective Walkway width | Actual walkway width | Sidewalk Volumes | Platoon Flow Rate (ped/min/ft) | Platoon Level of Service | Impact? | Proposed Effective Walkwa | Proposed Actual walkway width | Sidewalk Volumes | Platoon Flow Rate (ped/min/ft) | Platoon Level of Service | Still Impact? |
| ***Seventh Ave @ 34th St*** | 1 | 17 | 20 | 1029 | 8 | C | 17 | 20 | 1034 | 8 | C | | | | 1034 | 8 | C | |
| | 2 | 17 | 20 | 1020 | 8 | C | 17 | 20 | 1026 | 8 | C | | | | 1026 | 8 | C | |
| | 3 | 20 | 23 | 981 | 7 | B | 20 | 23 | 1023 | 7 | B | | | | 1023 | 7 | B | |
| | 4 | 20 | 23 | 797 | 7 | B | 20 | 23 | 839 | 7 | B | | | | 839 | 7 | B | |
| | 5 | 17 | 20 | 861 | 7 | B | 17 | 20 | 862 | 7 | B | | | | 862 | 7 | B | |
| | 6 | 17 | 20 | 773 | 7 | B | 17 | 20 | 779 | 7 | B | | | | 779 | 7 | B | |
| | 7 | 20 | 23 | 893 | 7 | B | 20 | 23 | 995 | 7 | B | | | | 995 | 7 | B | |
| | 8 | 20 | 23 | 1059 | 8 | C | 20 | 23 | 1114 | 8 | C | | | | 1114 | 8 | C | |
| ***Sixth Ave @ 33rd St*** | 1 | 26 | 34 | 1108 | 7 | B | 26 | 34 | 1109 | 7 | B | | | | 1109 | 7 | B | |
| | 2 | 25 | 28 | 596 | 6 | B | 25 | 28 | 596 | 6 | B | | | | 596 | 6 | B | |
| | 3 | 10 | 13 | 591 | 8 | C | 10 | 13 | 603 | 8 | C | | | | 603 | 8 | C | |
| | 4 | 10 | 13 | 709 | 9 | C | 10 | 13 | 721 | 9 | C | | | | 721 | 9 | C | |
| | 5 | 24 | 27 | 528 | 5 | B | 24 | 27 | 529 | 5 | B | | | | 529 | 5 | B | |
| | 6 | 17 | 24 | 1277 | 9 | C | 17 | 24 | 1278 | 9 | C | | | | 1278 | 9 | C | |
| | 7 | 10 | 13 | 855 | 10 | C | 10 | 13 | 869 | 10 | C | | | | 869 | 10 | C | |
| | 8 | 10 | 13 | 469 | 7 | B | 10 | 13 | 481 | 7 | B | | | | 481 | 7 | B | |
| ***Sixth Ave @ 34th St*** | 1 | 0 | 0 | 0 | N/A | N/A | 0 | 0 | 0 | N/A | N/A | | | | 0 | N/A | N/A | |
| | 2 | 10 | 17 | 1504 | 14 | D | 10 | 17 | 1504 | 14 | D | | | | 1504 | 14 | D | |
| | 3 | 20 | 23 | 1447 | 9 | C | 20 | 23 | 1489 | 9 | C | | | | 1489 | 9 | C | |
| | 4 | 18 | 23 | 1052 | 8 | C | 18 | 23 | 1094 | 8 | C | | | | 1094 | 8 | C | |
| | 5 | 14 | 17 | 958 | 9 | C | 14 | 17 | 958 | 9 | C | | | | 958 | 9 | C | |
| | 6 | 0 | 0 | 0 | N/A | N/A | 0 | 0 | 0 | N/A | N/A | | | | 0 | N/A | N/A | |
| | 7 | 0 | 0 | 0 | N/A | N/A | 0 | 0 | 0 | N/A | N/A | | | | 0 | N/A | N/A | |
| | 8 | 0 | 0 | 0 | N/A | N/A | 0 | 0 | 0 | N/A | N/A | | | | 0 | N/A | N/A | |
| ***Broadway @ 34th St*** | 1 | 25 | 30 | 1796 | 9 | C | 25 | 30 | 1796 | 9 | C | | | | 1796 | 9 | C | |
| | 2 | 0 | 0 | 0 | N/A | N/A | 0 | 0 | 0 | N/A | N/A | | | | 0 | N/A | N/A | |
| | 3 | 0 | 0 | 0 | N/A | N/A | 0 | 0 | 0 | N/A | N/A | | | | 0 | N/A | N/A | |
| | 4 | 0 | 0 | 0 | N/A | N/A | 0 | 0 | 0 | N/A | N/A | | | | 0 | N/A | N/A | |
| | 5 | 0 | 0 | 0 | N/A | N/A | 0 | 0 | 0 | N/A | N/A | | | | 0 | N/A | N/A | |
| | 6 | 25 | 30 | 1755 | 9 | C | 25 | 30 | 1755 | 9 | C | | | | 1755 | 9 | C | |
| | 7 | 18 | 23 | 1775 | 11 | D | 18 | 23 | 1818 | 11 | D | | | | 1818 | 11 | D | |
| | 8 | 18 | 23 | 1939 | 11 | D | 18 | 23 | 1981 | 11 | D | | | | 1981 | 11 | D | |
| ***Blvd @ 33rd St*** | 1 | 0 | 0 | 0 | N/A | N/A | 10 | 10 | 159 | 5 | B | | | | 159 | 5 | B | |
| | 2 | 0 | 0 | 0 | N/A | N/A | 10 | 13 | 94 | 5 | B | | | | 94 | 5 | B | |
| | 3 | 0 | 0 | 0 | N/A | N/A | 10 | 13 | 168 | 5 | B | | | | 168 | 5 | B | |
| | 4 | 0 | 0 | 0 | N/A | N/A | 10 | 13 | 170 | 5 | B | | | | 170 | 5 | B | |
| | 5 | 0 | 0 | 0 | N/A | N/A | 0 | 0 | 0 | N/A | N/A | | | | 0 | N/A | N/A | |
| | 6 | 0 | 0 | 0 | N/A | N/A | 0 | 0 | 0 | N/A | N/A | | | | 0 | N/A | N/A | |
| | 7 | 0 | 0 | 0 | N/A | N/A | 10 | 13 | 62 | 4 | B | | | | 62 | 4 | B | |
| | 8 | 0 | 0 | 0 | N/A | N/A | 10 | 13 | 97 | 5 | B | | | | 97 | 5 | B | |
| ***Blvd @ 34th St*** | 1 | 0 | 0 | 0 | N/A | N/A | 15 | 18 | 478 | 6 | B | | | | 478 | 6 | B | |
| | 2 | 0 | 0 | 0 | N/A | N/A | 10 | 13 | 14 | 4 | B | | | | 14 | 4 | B | |
| | 3 | 0 | 0 | 0 | N/A | N/A | 17 | 20 | 300 | 5 | B | | | | 300 | 5 | B | |
| | 4 | 0 | 0 | 0 | N/A | N/A | 17 | 20 | 284 | 5 | B | | | | 284 | 5 | B | |
| | 5 | 0 | 0 | 0 | N/A | N/A | 10 | 13 | 91 | 5 | B | | | | 91 | 5 | B | |
| | 6 | 0 | 0 | 0 | N/A | N/A | 10 | 13 | 105 | 5 | B | | | | 105 | 5 | B | |
| | 7 | 0 | 0 | 0 | N/A | N/A | 17 | 20 | 236 | 5 | B | | | | 236 | 5 | B | |
| | 8 | 0 | 0 | 0 | N/A | N/A | 26 | 30 | 541 | 5 | B | | | | 541 | 5 | B | |

# Appendix S.5.3

**Pedestrian Improvement Analysis - Sidewalks Level of Service**

**2010 Future Conditions (EVE)**

| Intersection | Walkway Location | 2010 Future without the Proposed Action | | | | | 2010 Future with the Proposed Action | | | | | | 2010 Future with the Proposed Action (Improvement) | | | | | |
|---|---|---|---|---|---|---|---|---|---|---|---|---|---|---|---|---|---|---|
| | | Effective Walkway width | Actual walkway width | Sidewalk Volumes | Platoon Flow Rate (ped/min/ft) | Platoon Level of Service | Effective Walkway width | Actual walkway width | Sidewalk Volumes | Platoon Flow Rate (ped/min/ft) | Platoon Level of Service | Impact? | Proposed Effective Walkwa | Proposed Actual walkway width | Sidewalk Volumes | Platoon Flow Rate (ped/min/ft) | Platoon Level of Service | Still Impact? |
| ***Twelfth Ave @ 30th St*** | 1 | 13 | 15 | 0 | 4 | B | 13 | 15 | 30 | 4 | B | | | | 30 | 4 | B | |
| | 2 | 9 | 11 | 9 | 4 | B | 9 | 11 | 9 | 4 | B | | | | 9 | 4 | B | |
| | 3 | 10 | 13 | 7 | 4 | B | 10 | 13 | 7 | 4 | B | | 30 | 35 | 7 | 4 | B | |
| | 4 | 10 | 13 | 0 | 4 | B | 10 | 13 | 0 | 4 | B | | | | 0 | 4 | B | |
| | 5 | 12 | 15 | 3 | 4 | B | 12 | 15 | 3 | 4 | B | | | | 3 | 4 | B | |
| | 6 | 13 | 15 | 0 | 4 | B | 13 | 15 | 31 | 4 | B | | | | 31 | 4 | B | |
| | 7 | 0 | 0 | 0 | N/A | N/A | 0 | 0 | 0 | N/A | N/A | | | | 0 | N/A | N/A | |
| | 8 | 0 | 0 | 0 | N/A | N/A | 0 | 0 | 0 | N/A | N/A | | | | 0 | N/A | N/A | |
| ***Twelfth Ave @ 34th St*** | 1 | 13 | 15 | 0 | 4 | B | 13 | 15 | 1074 | 10 | C | | | | 1074 | 10 | C | |
| | 2 | 9 | 12 | 1 | 4 | B | 9 | 12 | 606 | 8 | C | | | | 606 | 8 | C | |
| | 3 | 15 | 18 | 2 | 4 | B | 15 | 18 | 2 | 4 | B | | | | 2 | 4 | B | |
| | 4 | 15 | 18 | 3 | 4 | B | 15 | 18 | 1682 | 11 | D | | | | 608 | 7 | B | |
| | 5 | 9 | 12 | 1 | 4 | B | 9 | 12 | 1 | 4 | B | | | | 1 | 4 | B | |
| | 6 | 13 | 15 | 0 | 4 | B | 13 | 15 | 0 | 4 | B | | | | 0 | 4 | B | |
| | 7 | 0 | 0 | 0 | N/A | N/A | 0 | 0 | 0 | N/A | N/A | | | | 0 | N/A | N/A | |
| | 8 | 0 | 0 | 0 | N/A | N/A | 0 | 0 | 0 | N/A | N/A | | | | 0 | N/A | N/A | |
| ***Eleventh Ave @ 30th St*** | 1 | 12 | 15 | 1 | 4 | B | 12 | 15 | 3 | 4 | B | | | | 3 | 4 | B | |
| | 2 | 12 | 15 | 13 | 4 | B | 12 | 15 | 18 | 4 | B | | | | 18 | 4 | B | |
| | 3 | 10 | 13 | 8 | 4 | B | 10 | 13 | 765 | 9 | C | | 30 | 35 | 1307 | 7 | B | |
| | 4 | 10 | 13 | 3 | 4 | B | 10 | 13 | 35 | 4 | B | | | | 35 | 4 | B | |
| | 5 | 12 | 15 | 7 | 4 | B | 12 | 15 | 83 | 4 | B | | | | 83 | 4 | B | |
| | 6 | 12 | 15 | 2 | 4 | B | 12 | 15 | 166 | 5 | B | | | | 166 | 5 | B | |
| | 7 | 10 | 13 | 1 | 4 | B | 10 | 13 | 1 | 4 | B | | | | 1 | 4 | B | |
| | 8 | 10 | 13 | 0 | 4 | B | 10 | 13 | 0 | 4 | B | | 30 | 35 | 0 | 4 | B | |
| ***Eleventh Ave @ 33rd St*** | 1 | 12 | 15 | 3 | 4 | B | 12 | 15 | 3446 | 23 | E | Yes | | | 2006 | 15 | D | |
| | 2 | 12 | 15 | 21 | 4 | B | 12 | 15 | 23 | 4 | B | | | | 23 | 4 | B | |
| | 3 | 10 | 13 | 17 | 4 | B | 10 | 13 | 699 | 9 | C | | | | 475 | 7 | B | |
| | 4 | 10 | 13 | 2 | 4 | B | 10 | 13 | 3050 | 24 | E | Yes | 30 | 35 | 2441 | 9 | C | |
| | 5 | 12 | 15 | 7 | 4 | B | 12 | 15 | 11 | 4 | B | | | | 11 | 4 | B | |
| | 6 | 12 | 15 | 6 | 4 | B | 12 | 15 | 8 | 4 | B | | | | 8 | 4 | B | |
| | 7 | 10 | 13 | 1 | 4 | B | 0 | 0 | 0 | N/A | N/A | | | | 0 | N/A | N/A | |
| | 8 | 10 | 13 | 0 | 4 | B | 0 | 0 | 0 | N/A | N/A | | | | 0 | N/A | N/A | |
| ***Eleventh Ave @ 34th St*** | 1 | 13 | 15 | 3 | 4 | B | 13 | 15 | 372 | 6 | B | | | | 339 | 6 | B | |
| | 2 | 9 | 12 | 13 | 4 | B | 14 | 17 | 469 | 6 | B | | | | 465 | 6 | B | |
| | 3 | 17 | 20 | 6 | 4 | B | 26 | 30 | 209 | 5 | B | | | | 175 | 4 | B | |
| | 4 | 17 | 20 | 40 | 4 | B | 17 | 20 | 545 | 6 | B | | | | 251 | 5 | B | |
| | 5 | 12 | 15 | 29 | 4 | B | 12 | 15 | 101 | 5 | B | | | | 101 | 5 | B | |
| | 6 | 12 | 15 | 3 | 4 | B | 12 | 15 | 3446 | 23 | E | Yes | | | 2006 | 15 | D | |
| | 7 | 17 | 20 | 5 | 4 | B | 17 | 20 | 1684 | 11 | D | | | | 610 | 6 | B | |
| | 8 | 17 | 20 | 16 | 4 | B | 17 | 20 | 16 | 4 | B | | | | 16 | 4 | B | |
| ***Eleventh Ave @ 39th St*** | 1 | 11 | 14 | 0 | 4 | B | 11 | 14 | 137 | 5 | B | | | | 137 | 5 | B | |
| | 2 | 7 | 10 | 0 | 4 | B | 7 | 10 | 275 | 7 | B | | | | 275 | 7 | B | |
| | 3 | 9 | 12 | 5 | 4 | B | 9 | 12 | 26 | 4 | B | | | | 26 | 4 | B | |
| | 4 | 8 | 11 | 7 | 4 | B | 8 | 11 | 21 | 4 | B | | | | 21 | 4 | B | |
| | 5 | 7 | 10 | 1 | 4 | B | 7 | 10 | 308 | 7 | B | | | | 308 | 7 | B | |
| | 6 | 12 | 15 | 0 | 4 | B | 12 | 15 | 135 | 5 | B | | | | 135 | 5 | B | |
| | 7 | 10 | 13 | 1 | 4 | B | 0 | 0 | 0 | N/A | N/A | | | | 0 | N/A | N/A | |
| | 8 | 12 | 15 | 1 | 4 | B | 0 | 0 | 0 | N/A | N/A | | | | 0 | N/A | N/A | |

# Appendix S.5.3

**Pedestrian Improvement Analysis - Sidewalks Level of Service**

**2010 Future Conditions (EVE)**

| Intersection | Walkway Location | 2010 Future without the Proposed Action | | | | | 2010 Future with the Proposed Action | | | | | | 2010 Future with the Proposed Action (Improvement) | | | | | |
|---|---|---|---|---|---|---|---|---|---|---|---|---|---|---|---|---|---|---|
| | | Effective Walkway width | Actual walkway width | Sidewalk Volumes | Platoon Flow Rate (ped/min/ft) | Platoon Level of Service | Effective Walkway width | Actual walkway width | Sidewalk Volumes | Platoon Flow Rate (ped/min/ft) | Platoon Level of Service | Impact? | Proposed Effective Walkwa | Proposed Actual walkway width | Sidewalk Volumes | Platoon Flow Rate (ped/min/ft) | Platoon Level of Service | Still Impact? |
| ***Eleventh Ave @ 42nd St*** | 1 | 13 | 16 | 25 | 4 | B | 13 | 16 | 29 | 4 | B | | | | 29 | 4 | B | |
| | 2 | 13 | 16 | 18 | 4 | B | 13 | 16 | 105 | 5 | B | | | | 105 | 5 | B | |
| | 3 | 12 | 15 | 78 | 4 | B | 12 | 15 | 111 | 5 | B | | | | 111 | 5 | B | |
| | 4 | 12 | 15 | 35 | 4 | B | 12 | 15 | 73 | 4 | B | | | | 73 | 4 | B | |
| | 5 | 12 | 16 | 8 | 4 | B | 12 | 16 | 122 | 5 | B | | | | 122 | 5 | B | |
| | 6 | 12 | 15 | 48 | 4 | B | 12 | 15 | 50 | 4 | B | | | | 50 | 4 | B | |
| | 7 | 12 | 16 | 18 | 4 | B | 12 | 16 | 18 | 4 | B | | | | 18 | 4 | B | |
| | 8 | 12 | 16 | 38 | 4 | B | 12 | 16 | 66 | 4 | B | | | | 66 | 4 | B | |
| ***Tenth Ave @ 30th St*** | 1 | 13 | 16 | 18 | 4 | B | 13 | 16 | 1988 | 14 | D | | | | 1147 | 10 | C | |
| | 2 | 12 | 15 | 16 | 4 | B | 12 | 15 | 370 | 6 | B | | | | 19 | 4 | B | |
| | 3 | 10 | 13 | 6 | 4 | B | 10 | 13 | 641 | 8 | C | | | | 47 | 4 | B | |
| | 4 | 12 | 15 | 12 | 4 | B | 12 | 15 | 143 | 5 | B | | | | 143 | 5 | B | |
| | 5 | 12 | 15 | 16 | 4 | B | 12 | 15 | 31 | 4 | B | | | | 31 | 4 | B | |
| | 6 | 12 | 15 | 25 | 4 | B | 12 | 15 | 31 | 4 | B | | | | 31 | 4 | B | |
| | 7 | 11 | 14 | 13 | 4 | B | 11 | 14 | 15 | 4 | B | | | | 15 | 4 | B | |
| | 8 | 11 | 14 | 5 | 4 | B | 11 | 14 | 3108 | 23 | E | Yes | 31 | 36 | 1321 | 7 | B | |
| ***Tenth Ave @ 31st St*** | 1 | 12 | 15 | 14 | 4 | B | 12 | 15 | 776 | 8 | C | | | | 1895 | 15 | D | |
| | 2 | 12 | 15 | 11 | 4 | B | 12 | 15 | 681 | 8 | C | | | | 1184 | 11 | D | |
| | 3 | 11 | 13 | 6 | 4 | B | 11 | 13 | 1484 | 13 | D | | | | 633 | 8 | C | |
| | 4 | 11 | 13 | 7 | 4 | B | 11 | 13 | 881 | 9 | C | | | | 352 | 6 | B | |
| | 5 | 12 | 15 | 16 | 4 | B | 12 | 15 | 370 | 6 | B | | | | 18 | 4 | B | |
| | 6 | 12 | 15 | 15 | 4 | B | 12 | 15 | 1985 | 15 | D | | | | 1144 | 10 | C | |
| | 7 | 0 | 0 | 0 | N/A | N/A | 0 | 0 | 0 | N/A | N/A | | | | 0 | N/A | N/A | |
| | 8 | 0 | 0 | 0 | N/A | N/A | 0 | 0 | 0 | N/A | N/A | | | | 0 | N/A | N/A | |
| ***Tenth Ave @ 33rd St*** | 1 | 12 | 15 | 15 | 4 | B | 12 | 15 | 164 | 5 | B | | | | 117 | 5 | B | |
| | 2 | 12 | 15 | 20 | 4 | B | 12 | 15 | 179 | 5 | B | | | | 124 | 5 | B | |
| | 3 | 10 | 13 | 10 | 4 | B | 10 | 13 | 663 | 8 | C | | | | 461 | 7 | B | |
| | 4 | 10 | 13 | 34 | 4 | B | 10 | 13 | 2405 | 20 | E | Yes | 30 | 35 | 4919 | 15 | D | |
| | 5 | 12 | 15 | 14 | 4 | B | 12 | 15 | 692 | 8 | C | | | | 1195 | 11 | D | |
| | 6 | 12 | 15 | 22 | 4 | B | 12 | 15 | 784 | 8 | C | | | | 1156 | 10 | C | |
| | 7 | 10 | 13 | 6 | 4 | B | 10 | 13 | 2581 | 21 | E | Yes | 30 | 35 | 3293 | 11 | D | |
| | 8 | 10 | 13 | 12 | 4 | B | 10 | 13 | 843 | 10 | C | | | | 525 | 8 | C | |
| ***Tenth Ave @ 34th St*** | 1 | 12 | 15 | 19 | 4 | B | 12 | 15 | 115 | 5 | B | | | | 115 | 5 | B | |
| | 2 | 12 | 15 | 35 | 4 | B | 12 | 15 | 92 | 5 | B | | | | 92 | 5 | B | |
| | 3 | 17 | 20 | 48 | 4 | B | 17 | 20 | 278 | 5 | B | | | | 195 | 5 | B | |
| | 4 | 17 | 20 | 71 | 4 | B | 17 | 20 | 541 | 6 | B | | | | 286 | 5 | B | |
| | 5 | 12 | 15 | 24 | 4 | B | 12 | 15 | 183 | 5 | B | | | | 128 | 5 | B | |
| | 6 | 12 | 15 | 22 | 4 | B | 12 | 15 | 171 | 5 | B | | | | 125 | 5 | B | |
| | 7 | 17 | 20 | 52 | 4 | B | 17 | 20 | 499 | 6 | B | | | | 314 | 5 | B | |
| | 8 | 17 | 20 | 38 | 4 | B | 17 | 20 | 205 | 5 | B | | | | 152 | 5 | B | |
| ***Ninth Ave @ 30th St*** | 1 | 14 | 16 | 36 | 4 | B | 14 | 16 | 265 | 5 | B | | | | 52 | 4 | B | |
| | 2 | 8 | 15 | 82 | 5 | B | 8 | 15 | 261 | 6 | B | | | | 88 | 5 | B | |
| | 3 | 6 | 13 | 22 | 4 | B | 6 | 13 | 249 | 7 | B | | | | 42 | 4 | B | |
| | 4 | 10 | 13 | 21 | 4 | B | 10 | 13 | 21 | 4 | B | | | | 21 | 4 | B | |
| | 5 | 13 | 16 | 58 | 4 | B | 13 | 16 | 124 | 5 | B | | | | 124 | 5 | B | |
| | 6 | 13 | 16 | 31 | 4 | B | 13 | 16 | 96 | 4 | B | | | | 96 | 4 | B | |
| | 7 | 11 | 14 | 38 | 4 | B | 11 | 14 | 169 | 5 | B | | | | 169 | 5 | B | |
| | 8 | 10 | 12 | 11 | 4 | B | 10 | 12 | 646 | 8 | C | | | | 52 | 4 | B | |

# Appendix S.5.3

**Pedestrian Improvement Analysis - Sidewalks Level of Service**

**2010 Future Conditions (EVE)**

| Intersection | Walkway Location | 2010 Future without the Proposed Action | | | | | 2010 Future with the Proposed Action | | | | | | 2010 Future with the Proposed Action (Improvement) | | | | | |
|---|---|---|---|---|---|---|---|---|---|---|---|---|---|---|---|---|---|---|
| | | Effective Walkway width | Actual walkway width | Sidewalk Volumes | Platoon Flow Rate (ped/min/ft) | Platoon Level of Service | Effective Walkway width | Actual walkway width | Sidewalk Volumes | Platoon Flow Rate (ped/min/ft) | Platoon Level of Service | Impact? | Proposed Effective Walkwa | Proposed Actual walkway width | Sidewalk Volumes | Platoon Flow Rate (ped/min/ft) | Platoon Level of Service | Still Impact? |
| ***Ninth Ave @ 31st St*** | 1 | 12 | 15 | 28 | 4 | B | 12 | 15 | 69 | 4 | B | | | | 174 | 5 | B | |
| | 2 | 10 | 13 | 38 | 4 | B | 10 | 13 | 559 | 8 | C | | | | 38 | 4 | B | |
| | 3 | 10 | 13 | 25 | 4 | B | 10 | 13 | 1762 | 16 | E | Yes | | | 828 | 10 | C | |
| | 4 | 10 | 13 | 28 | 4 | B | 10 | 13 | 478 | 7 | B | | | | 61 | 4 | B | |
| | 5 | 12 | 15 | 68 | 4 | B | 12 | 15 | 248 | 5 | B | | | | 74 | 4 | B | |
| | 6 | 12 | 15 | 36 | 4 | B | 12 | 15 | 252 | 5 | B | | | | 39 | 4 | B | |
| | 7 | 10 | 13 | 7 | 4 | B | 10 | 13 | 882 | 10 | C | | | | 352 | 6 | B | |
| | 8 | 10 | 13 | 11 | 4 | B | 10 | 13 | 1489 | 14 | D | | | | 638 | 8 | C | |
| ***Ninth Ave @ 33rd St*** | 1 | 12 | 15 | 35 | 4 | B | 12 | 15 | 222 | 5 | B | | | | 157 | 5 | B | |
| | 2 | 12 | 15 | 90 | 5 | B | 12 | 15 | 263 | 5 | B | | | | 216 | 5 | B | |
| | 3 | 10 | 13 | 25 | 4 | B | 10 | 13 | 514 | 7 | B | | | | 497 | 7 | B | |
| | 4 | 10 | 13 | 88 | 5 | B | 10 | 13 | 2740 | 22 | E | Yes | 30 | 35 | 4763 | 15 | D | |
| | 5 | 12 | 15 | 48 | 4 | B | 12 | 15 | 569 | 7 | B | | | | 48 | 4 | B | |
| | 6 | 12 | 15 | 20 | 4 | B | 12 | 15 | 99 | 5 | B | | | | 204 | 5 | B | |
| | 7 | 10 | 13 | 79 | 5 | B | 10 | 13 | 2422 | 20 | E | Yes | 30 | 35 | 4936 | 15 | D | |
| | 8 | 10 | 13 | 20 | 4 | B | 10 | 13 | 654 | 8 | C | | | | 452 | 7 | B | |
| ***Ninth Ave @ 34th St*** | 1 | 11 | 15 | 73 | 4 | B | 11 | 15 | 172 | 5 | B | | | | 172 | 5 | B | |
| | 2 | 12 | 15 | 98 | 5 | B | 12 | 15 | 114 | 5 | B | | | | 114 | 5 | B | |
| | 3 | 19 | 23 | 129 | 4 | B | 19 | 23 | 508 | 6 | B | | | | 394 | 5 | B | |
| | 4 | 19 | 23 | 152 | 5 | B | 19 | 23 | 627 | 6 | B | | | | 293 | 5 | B | |
| | 5 | 12 | 15 | 91 | 5 | B | 12 | 15 | 264 | 5 | B | | | | 217 | 5 | B | |
| | 6 | 12 | 15 | 39 | 4 | B | 12 | 15 | 228 | 5 | B | | | | 164 | 5 | B | |
| | 7 | 16 | 20 | 75 | 4 | B | 16 | 20 | 545 | 6 | B | | | | 291 | 5 | B | |
| | 8 | 15 | 20 | 52 | 4 | B | 15 | 20 | 283 | 5 | B | | | | 200 | 5 | B | |
| ***Eighth Ave @ 30th St*** | 1 | 11 | 14 | 124 | 5 | B | 11 | 14 | 229 | 5 | B | | | | 124 | 5 | B | |
| | 2 | 11 | 15 | 261 | 6 | B | 11 | 15 | 356 | 6 | B | | | | 281 | 6 | B | |
| | 3 | 9 | 13 | 83 | 5 | B | 9 | 13 | 110 | 5 | B | | | | 83 | 5 | B | |
| | 4 | 11 | 14 | 38 | 4 | B | 11 | 14 | 38 | 4 | B | | | | 38 | 4 | B | |
| | 5 | 12 | 15 | 109 | 5 | B | 12 | 15 | 109 | 5 | B | | | | 109 | 5 | B | |
| | 6 | 11 | 14 | 132 | 5 | B | 11 | 14 | 132 | 5 | B | | | | 132 | 5 | B | |
| | 7 | 10 | 14 | 47 | 4 | B | 10 | 14 | 47 | 4 | B | | | | 47 | 4 | B | |
| | 8 | 10 | 13 | 49 | 4 | B | 10 | 13 | 277 | 6 | B | | | | 70 | 4 | B | |
| ***Eighth Ave @ 31st St*** | 1 | 12 | 16 | 162 | 5 | B | 12 | 16 | 206 | 5 | B | | | | 162 | 5 | B | |
| | 2 | 18 | 24 | 121 | 4 | B | 18 | 24 | 175 | 5 | B | | | | 121 | 4 | B | |
| | 3 | 35 | 49 | 126 | 4 | B | 35 | 49 | 743 | 5 | B | | | | 286 | 5 | B | |
| | 4 | 10 | 14 | 20 | 4 | B | 10 | 14 | 136 | 5 | B | | | | 20 | 4 | B | |
| | 5 | 12 | 15 | 210 | 5 | B | 12 | 15 | 305 | 6 | B | | | | 230 | 5 | B | |
| | 6 | 12 | 15 | 240 | 5 | B | 12 | 15 | 345 | 6 | B | | | | 240 | 5 | B | |
| | 7 | 10 | 13 | 124 | 5 | B | 10 | 13 | 574 | 8 | C | | | | 156 | 5 | B | |
| | 8 | 21 | 24 | 84 | 4 | B | 21 | 24 | 1392 | 8 | C | | | | 673 | 6 | B | |
| ***Eighth Ave @ 33rd St*** | 1 | 12 | 15 | 382 | 6 | B | 12 | 15 | 483 | 7 | B | | | | 523 | 7 | B | |
| | 2 | 12 | 19 | 318 | 6 | B | 12 | 19 | 441 | 6 | B | | | | 425 | 6 | B | |
| | 3 | 10 | 17 | 188 | 5 | B | 10 | 17 | 376 | 7 | B | | | | 336 | 6 | B | |
| | 4 | 30 | 43 | 361 | 5 | B | 30 | 43 | 583 | 5 | B | | | | 1303 | 7 | B | |
| | 5 | 30 | 43 | 389 | 5 | B | 30 | 43 | 444 | 5 | B | | | | 390 | 5 | B | |
| | 6 | 12 | 16 | 221 | 5 | B | 12 | 16 | 266 | 5 | B | | | | 222 | 5 | B | |
| | 7 | 13 | 24 | 245 | 5 | B | 13 | 24 | 2253 | 16 | E | Yes | 33 | 46 | 3418 | 11 | D | |
| | 8 | 7 | 14 | 68 | 5 | B | 7 | 14 | 475 | 9 | C | | | | 459 | 8 | C | |

# Appendix S.5.3

**Pedestrian Improvement Analysis - Sidewalks Level of Service**

**2010 Future Conditions (EVE)**

| Intersection | Walkway Location | 2010 Future without the Proposed Action | | | | | 2010 Future with the Proposed Action | | | | | | 2010 Future with the Proposed Action (Improvement) | | | | | |
|---|---|---|---|---|---|---|---|---|---|---|---|---|---|---|---|---|---|---|
| | | Effective Walkway width | Actual walkway width | Sidewalk Volumes | Platoon Flow Rate (ped/min/ft) | Platoon Level of Service | Effective Walkway width | Actual walkway width | Sidewalk Volumes | Platoon Flow Rate (ped/min/ft) | Platoon Level of Service | Impact? | Proposed Effective Walkwa | Proposed Actual walkway width | Sidewalk Volumes | Platoon Flow Rate (ped/min/ft) | Platoon Level of Service | Still Impact? |
| ***Eighth Ave @ 34th St*** | 1 | 11 | 15 | 92 | 5 | B | 11 | 15 | 110 | 5 | B | | | | 92 | 5 | B | |
| | 2 | 11 | 15 | 226 | 5 | B | 11 | 15 | 246 | 5 | B | | | | 228 | 5 | B | |
| | 3 | 19 | 22 | 394 | 5 | B | 19 | 22 | 510 | 6 | B | | | | 443 | 6 | B | |
| | 4 | 19 | 22 | 210 | 5 | B | 19 | 22 | 764 | 7 | B | | | | 498 | 6 | B | |
| | 5 | 12 | 15 | 85 | 4 | B | 12 | 15 | 209 | 5 | B | | | | 193 | 5 | B | |
| | 6 | 11 | 15 | 266 | 6 | B | 11 | 15 | 367 | 6 | B | | | | 407 | 6 | B | |
| | 7 | 12 | 22 | 87 | 4 | B | 12 | 22 | 549 | 7 | B | | | | 215 | 5 | B | |
| | 8 | 18 | 22 | 164 | 5 | B | 18 | 22 | 334 | 5 | B | | | | 220 | 5 | B | |
| ***Sixth Ave @ 34th St*** | 1 | 0 | 0 | 0 | N/A | N/A | 0 | 0 | 0 | N/A | N/A | | | | 0 | N/A | N/A | |
| | 2 | 10 | 17 | 297 | 6 | B | 10 | 17 | 297 | 6 | B | | | | 297 | 6 | B | |
| | 3 | 20 | 23 | 628 | 6 | B | 20 | 23 | 630 | 6 | B | | | | 630 | 6 | B | |
| | 4 | 18 | 23 | 485 | 6 | B | 18 | 23 | 487 | 6 | B | | | | 487 | 6 | B | |
| | 5 | 14 | 17 | 404 | 6 | B | 14 | 17 | 404 | 6 | B | | | | 404 | 6 | B | |
| | 6 | 0 | 0 | 0 | N/A | N/A | 0 | 0 | 0 | N/A | N/A | | | | 0 | N/A | N/A | |
| | 7 | 0 | 0 | 0 | N/A | N/A | 0 | 0 | 0 | N/A | N/A | | | | 0 | N/A | N/A | |
| | 8 | 0 | 0 | 0 | N/A | N/A | 0 | 0 | 0 | N/A | N/A | | | | 0 | N/A | N/A | |
| ***Broadway @ 34th St*** | 1 | 25 | 30 | 473 | 5 | B | 25 | 30 | 482 | 5 | B | | | | 473 | 5 | B | |
| | 2 | 0 | 0 | 0 | N/A | N/A | 0 | 0 | 0 | N/A | N/A | | | | 0 | N/A | N/A | |
| | 3 | 0 | 0 | 0 | N/A | N/A | 0 | 0 | 0 | N/A | N/A | | | | 0 | N/A | N/A | |
| | 4 | 0 | 0 | 0 | N/A | N/A | 0 | 0 | 0 | N/A | N/A | | | | 0 | N/A | N/A | |
| | 5 | 0 | 0 | 0 | N/A | N/A | 0 | 0 | 0 | N/A | N/A | | | | 0 | N/A | N/A | |
| | 6 | 25 | 30 | 584 | 6 | B | 25 | 30 | 584 | 6 | B | | | | 584 | 6 | B | |
| | 7 | 18 | 23 | 843 | 7 | B | 18 | 23 | 868 | 7 | B | | | | 868 | 7 | B | |
| | 8 | 18 | 23 | 665 | 6 | B | 18 | 23 | 700 | 7 | B | | | | 681 | 7 | B | |
| ***Blvd @ 33rd St*** | 1 | 0 | 0 | 0 | N/A | N/A | 10 | 10 | 90 | 5 | B | | | | 56 | 4 | B | |
| | 2 | 0 | 0 | 0 | N/A | N/A | 10 | 13 | 61 | 4 | B | | | | 23 | 4 | B | |
| | 3 | 0 | 0 | 0 | N/A | N/A | 10 | 13 | 836 | 10 | C | | | | 518 | 7 | B | |
| | 4 | 0 | 0 | 0 | N/A | N/A | 10 | 13 | 2577 | 21 | E | | 30 | 35 | 3289 | 11 | D | |
| | 5 | 0 | 0 | 0 | N/A | N/A | 0 | 0 | 0 | N/A | N/A | | | | 0 | N/A | N/A | |
| | 6 | 0 | 0 | 0 | N/A | N/A | 0 | 0 | 0 | N/A | N/A | | | | 0 | N/A | N/A | |
| | 7 | 0 | 0 | 0 | N/A | N/A | 10 | 13 | 3048 | 24 | E | | 30 | 35 | 2439 | 9 | C | |
| | 8 | 0 | 0 | 0 | N/A | N/A | 10 | 13 | 686 | 9 | C | | | | 462 | 7 | B | |
| ***Blvd @ 34th St*** | 1 | 0 | 0 | 0 | N/A | N/A | 15 | 18 | 12 | 4 | B | | | | 12 | 4 | B | |
| | 2 | 0 | 0 | 0 | N/A | N/A | 10 | 13 | 5 | 4 | B | | | | 5 | 4 | B | |
| | 3 | 0 | 0 | 0 | N/A | N/A | 17 | 20 | 238 | 5 | B | | | | 185 | 5 | B | |
| | 4 | 0 | 0 | 0 | N/A | N/A | 17 | 20 | 447 | 6 | B | | | | 262 | 5 | B | |
| | 5 | 0 | 0 | 0 | N/A | N/A | 10 | 13 | 61 | 4 | B | | | | 22 | 4 | B | |
| | 6 | 0 | 0 | 0 | N/A | N/A | 10 | 13 | 113 | 5 | B | | | | 80 | 5 | B | |
| | 7 | 0 | 0 | 0 | N/A | N/A | 17 | 20 | 506 | 6 | B | | | | 212 | 5 | B | |
| | 8 | 0 | 0 | 0 | N/A | N/A | 26 | 30 | 213 | 5 | B | | | | 179 | 4 | B | |

# Appendix S.5.3

**Pedestrian Improvement Analysis - Sidewalks Level of Service**

**2010 Future Conditions (SUN)**

| Intersection | Walkway Location | 2010 Future without the Proposed Action | | | | | 2010 Future with the Proposed Action | | | | | | 2010 Future with the Proposed Action (Improvement) | | | | | |
|---|---|---|---|---|---|---|---|---|---|---|---|---|---|---|---|---|---|---|
| | | Effective Walkway width | Actual walkway width | Sidewalk Volumes | Platoon Flow Rate (ped/min/ft) | Platoon Level of Service | Effective Walkway width | Actual walkway width | Sidewalk Volumes | Platoon Flow Rate (ped/min/ft) | Platoon Level of Service | Impact? | Proposed Effective Walkwa | Proposed Actual walkway width | Sidewalk Volumes | Platoon Flow Rate (ped/min/ft) | Platoon Level of Service | Still Impact? |
| ***Twelfth Ave @ 30th St*** | 1 | 13 | 15 | 0 | 4 | B | 13 | 15 | 46 | 4 | B | | | | 46 | 4 | B | |
| | 2 | 9 | 11 | 7 | 4 | B | 9 | 11 | 7 | 4 | B | | | | 7 | 4 | B | |
| | 3 | 10 | 13 | 3 | 4 | B | 10 | 13 | 3 | 4 | B | | 30 | 35 | 3 | 4 | B | |
| | 4 | 10 | 13 | 2 | 4 | B | 10 | 13 | 2 | 4 | B | | | | 2 | 4 | B | |
| | 5 | 12 | 15 | 0 | 4 | B | 12 | 15 | 0 | 4 | B | | | | 0 | 4 | B | |
| | 6 | 13 | 15 | 0 | 4 | B | 13 | 15 | 46 | 4 | B | | | | 46 | 4 | B | |
| | 7 | 0 | 0 | 0 | N/A | N/A | 0 | 0 | 0 | N/A | N/A | | | | 0 | N/A | N/A | |
| | 8 | 0 | 0 | 0 | N/A | N/A | 0 | 0 | 0 | N/A | N/A | | | | 0 | N/A | N/A | |
| ***Twelfth Ave @ 34th St*** | 1 | 13 | 15 | 0 | 4 | B | 13 | 15 | 1111 | 10 | C | | | | 1111 | 10 | C | |
| | 2 | 9 | 12 | 9 | 4 | B | 9 | 12 | 615 | 9 | C | | | | 615 | 9 | C | |
| | 3 | 15 | 18 | 3 | 4 | B | 15 | 18 | 3 | 4 | B | | | | 3 | 4 | B | |
| | 4 | 15 | 18 | 121 | 5 | B | 15 | 18 | 1805 | 12 | D | | | | 628 | 7 | B | |
| | 5 | 9 | 12 | 5 | 4 | B | 9 | 12 | 5 | 4 | B | | | | 5 | 4 | B | |
| | 6 | 13 | 15 | 0 | 4 | B | 13 | 15 | 35 | 4 | B | | | | 35 | 4 | B | |
| | 7 | 0 | 0 | 0 | N/A | N/A | 0 | 0 | 0 | N/A | N/A | | | | 0 | N/A | N/A | |
| | 8 | 0 | 0 | 0 | N/A | N/A | 0 | 0 | 0 | N/A | N/A | | | | 0 | N/A | N/A | |
| ***Eleventh Ave @ 30th St*** | 1 | 12 | 15 | 8 | 4 | B | 12 | 15 | 16 | 4 | B | | | | 16 | 4 | B | |
| | 2 | 12 | 15 | 50 | 4 | B | 12 | 15 | 70 | 4 | B | | | | 70 | 4 | B | |
| | 3 | 10 | 13 | 46 | 4 | B | 10 | 13 | 1246 | 12 | D | | 30 | 35 | 1790 | 8 | C | |
| | 4 | 10 | 13 | 8 | 4 | B | 10 | 13 | 132 | 5 | B | | | | 258 | 6 | B | |
| | 5 | 12 | 15 | 62 | 4 | B | 12 | 15 | 208 | 5 | B | | | | 82 | 4 | B | |
| | 6 | 12 | 15 | 18 | 4 | B | 12 | 15 | 340 | 6 | B | | | | 26 | 4 | B | |
| | 7 | 10 | 13 | 2 | 4 | B | 10 | 13 | 2 | 4 | B | | | | 2 | 4 | B | |
| | 8 | 10 | 13 | 0 | 4 | B | 10 | 13 | 0 | 4 | B | | 30 | 35 | 0 | 4 | B | |
| ***Eleventh Ave @ 33rd St*** | 1 | 12 | 15 | 2 | 4 | B | 12 | 15 | 3970 | 26 | F | Yes | | | 2563 | 18 | E | Yes |
| | 2 | 12 | 15 | 74 | 4 | B | 12 | 15 | 614 | 7 | B | | | | 614 | 7 | B | |
| | 3 | 10 | 13 | 53 | 4 | B | 10 | 13 | 920 | 10 | C | | | | 750 | 9 | C | |
| | 4 | 10 | 13 | 2 | 4 | B | 10 | 13 | 2988 | 24 | E | Yes | 30 | 35 | 2291 | 9 | C | |
| | 5 | 12 | 15 | 27 | 4 | B | 12 | 15 | 47 | 4 | B | | | | 47 | 4 | B | |
| | 6 | 12 | 15 | 1 | 4 | B | 12 | 15 | 9 | 4 | B | | | | 9 | 4 | B | |
| | 7 | 10 | 13 | 2 | 4 | B | 0 | 0 | 0 | N/A | N/A | | | | 0 | N/A | N/A | |
| | 8 | 10 | 13 | 1 | 4 | B | 0 | 0 | 0 | N/A | N/A | | | | 0 | N/A | N/A | |
| ***Eleventh Ave @ 34th St*** | 1 | 13 | 15 | 24 | 4 | B | 13 | 15 | 1083 | 10 | C | | | | 1053 | 9 | C | |
| | 2 | 9 | 12 | 58 | 4 | B | 14 | 17 | 1178 | 10 | C | | | | 1175 | 10 | C | |
| | 3 | 17 | 20 | 106 | 4 | B | 26 | 30 | 381 | 5 | B | | | | 354 | 5 | B | |
| | 4 | 17 | 20 | 76 | 4 | B | 17 | 20 | 670 | 7 | B | | | | 403 | 6 | B | |
| | 5 | 12 | 15 | 68 | 4 | B | 12 | 15 | 628 | 7 | B | | | | 628 | 7 | B | |
| | 6 | 12 | 15 | 2 | 4 | B | 12 | 15 | 3970 | 26 | F | Yes | | | 2664 | 19 | E | Yes |
| | 7 | 17 | 20 | 122 | 4 | B | 17 | 20 | 1806 | 11 | D | | | | 629 | 6 | B | |
| | 8 | 17 | 20 | 14 | 4 | B | 17 | 20 | 14 | 4 | B | | | | 14 | 4 | B | |
| ***Eleventh Ave @ 39th St*** | 1 | 11 | 14 | 7 | 4 | B | 11 | 14 | 223 | 5 | B | | | | 223 | 5 | B | |
| | 2 | 7 | 10 | 1 | 4 | B | 7 | 10 | 471 | 8 | C | | | | 471 | 8 | C | |
| | 3 | 9 | 12 | 4 | 4 | B | 9 | 12 | 135 | 5 | B | | | | 135 | 5 | B | |
| | 4 | 8 | 11 | 97 | 5 | B | 8 | 11 | 305 | 7 | B | | | | 305 | 7 | B | |
| | 5 | 7 | 10 | 1 | 4 | B | 7 | 10 | 664 | 10 | C | | | | 664 | 10 | C | |
| | 6 | 12 | 15 | 19 | 4 | B | 12 | 15 | 310 | 6 | B | | | | 340 | 6 | B | |
| | 7 | 10 | 13 | 85 | 5 | B | 0 | 0 | 0 | N/A | N/A | | | | 0 | N/A | N/A | |
| | 8 | 12 | 15 | 0 | 4 | B | 0 | 0 | 0 | N/A | N/A | | | | 0 | N/A | N/A | |

# Appendix S.5.3

**Pedestrian Improvement Analysis - Sidewalks Level of Service**

**2010 Future Conditions (SUN)**

| Intersection | Walkway Location | 2010 Future without the Proposed Action | | | | | 2010 Future with the Proposed Action | | | | | | 2010 Future with the Proposed Action (Improvement) | | | | | |
|---|---|---|---|---|---|---|---|---|---|---|---|---|---|---|---|---|---|---|
| | | Effective Walkway width | Actual walkway width | Sidewalk Volumes | Platoon Flow Rate (ped/min/ft) | Platoon Level of Service | Effective Walkway width | Actual walkway width | Sidewalk Volumes | Platoon Flow Rate (ped/min/ft) | Platoon Level of Service | Impact? | Proposed Effective Walkwa | Proposed Actual walkway width | Sidewalk Volumes | Platoon Flow Rate (ped/min/ft) | Platoon Level of Service | Still Impact? |
| ***Eleventh Ave @ 42nd St*** | 1 | 13 | 16 | 39 | 4 | B | 13 | 16 | 159 | 5 | B | | | | 159 | 5 | B | |
| | 2 | 13 | 16 | 31 | 4 | B | 13 | 16 | 108 | 5 | B | | | | 108 | 5 | B | |
| | 3 | 12 | 15 | 223 | 5 | B | 12 | 15 | 382 | 6 | B | | | | 382 | 6 | B | |
| | 4 | 12 | 15 | 183 | 5 | B | 12 | 15 | 296 | 6 | B | | | | 296 | 6 | B | |
| | 5 | 12 | 16 | 8 | 4 | B | 12 | 16 | 161 | 5 | B | | | | 161 | 5 | B | |
| | 6 | 12 | 15 | 67 | 4 | B | 12 | 15 | 171 | 5 | B | | | | 171 | 5 | B | |
| | 7 | 12 | 16 | 181 | 5 | B | 12 | 16 | 181 | 5 | B | | | | 181 | 5 | B | |
| | 8 | 12 | 16 | 158 | 5 | B | 12 | 16 | 328 | 6 | B | | | | 328 | 6 | B | |
| ***Tenth Ave @ 30th St*** | 1 | 13 | 16 | 60 | 4 | B | 13 | 16 | 2142 | 15 | D | | | | 1249 | 10 | C | |
| | 2 | 12 | 15 | 62 | 4 | B | 12 | 15 | 482 | 7 | B | | | | 109 | 5 | B | |
| | 3 | 10 | 13 | 68 | 4 | B | 10 | 13 | 1163 | 12 | D | | | | 549 | 8 | C | |
| | 4 | 12 | 15 | 32 | 4 | B | 12 | 15 | 165 | 5 | B | | | | 188 | 5 | B | |
| | 5 | 12 | 15 | 47 | 4 | B | 12 | 15 | 73 | 4 | B | | | | 50 | 4 | B | |
| | 6 | 12 | 15 | 85 | 4 | B | 12 | 15 | 100 | 5 | B | | | | 100 | 5 | B | |
| | 7 | 11 | 14 | 34 | 4 | B | 11 | 14 | 111 | 5 | B | | | | 111 | 5 | B | |
| | 8 | 11 | 14 | 53 | 4 | B | 11 | 14 | 3721 | 27 | F | Yes | 31 | 36 | 1840 | 8 | C | |
| ***Tenth Ave @ 31st St*** | 1 | 12 | 15 | 45 | 4 | B | 12 | 15 | 861 | 9 | C | | | | 2003 | 15 | D | |
| | 2 | 12 | 15 | 37 | 4 | B | 12 | 15 | 807 | 8 | C | | | | 1260 | 11 | D | |
| | 3 | 11 | 13 | 56 | 4 | B | 11 | 13 | 1679 | 14 | D | | | | 737 | 8 | C | |
| | 4 | 11 | 13 | 12 | 4 | B | 11 | 13 | 962 | 10 | C | | | | 420 | 7 | B | |
| | 5 | 12 | 15 | 67 | 4 | B | 12 | 15 | 471 | 7 | B | | | | 98 | 5 | B | |
| | 6 | 12 | 15 | 48 | 4 | B | 12 | 15 | 2130 | 16 | E | Yes | | | 1237 | 11 | D | |
| | 7 | 0 | 0 | 0 | N/A | N/A | 0 | 0 | 0 | N/A | N/A | | | | 0 | N/A | N/A | |
| | 8 | 0 | 0 | 0 | N/A | N/A | 0 | 0 | 0 | N/A | N/A | | | | 0 | N/A | N/A | |
| ***Tenth Ave @ 33rd St*** | 1 | 12 | 15 | 55 | 4 | B | 12 | 15 | 221 | 5 | B | | | | 178 | 5 | B | |
| | 2 | 12 | 15 | 47 | 4 | B | 12 | 15 | 197 | 5 | B | | | | 146 | 5 | B | |
| | 3 | 10 | 13 | 69 | 4 | B | 10 | 13 | 834 | 10 | C | | | | 681 | 9 | C | |
| | 4 | 10 | 13 | 128 | 5 | B | 10 | 13 | 2559 | 21 | E | Yes | 30 | 35 | 5174 | 15 | D | |
| | 5 | 12 | 15 | 35 | 4 | B | 12 | 15 | 822 | 9 | C | | | | 1274 | 11 | D | |
| | 6 | 12 | 15 | 46 | 4 | B | 12 | 15 | 864 | 9 | C | | | | 1240 | 11 | D | |
| | 7 | 10 | 13 | 58 | 4 | B | 10 | 13 | 2606 | 21 | E | Yes | 30 | 35 | 3274 | 11 | D | |
| | 8 | 10 | 13 | 70 | 4 | B | 10 | 13 | 1100 | 11 | D | | | | 841 | 10 | C | |
| ***Tenth Ave @ 34th St*** | 1 | 12 | 15 | 38 | 4 | B | 12 | 15 | 236 | 5 | B | | | | 236 | 5 | B | |
| | 2 | 12 | 15 | 32 | 4 | B | 12 | 15 | 165 | 5 | B | | | | 165 | 5 | B | |
| | 3 | 17 | 20 | 105 | 4 | B | 17 | 20 | 239 | 5 | B | | | | 172 | 5 | B | |
| | 4 | 17 | 20 | 88 | 4 | B | 17 | 20 | 514 | 6 | B | | | | 274 | 5 | B | |
| | 5 | 12 | 15 | 48 | 4 | B | 12 | 15 | 200 | 5 | B | | | | 150 | 5 | B | |
| | 6 | 12 | 15 | 34 | 4 | B | 12 | 15 | 203 | 5 | B | | | | 161 | 5 | B | |
| | 7 | 17 | 20 | 71 | 4 | B | 17 | 20 | 471 | 6 | B | | | | 299 | 5 | B | |
| | 8 | 17 | 20 | 88 | 4 | B | 17 | 20 | 321 | 5 | B | | | | 278 | 5 | B | |
| ***Ninth Ave @ 30th St*** | 1 | 14 | 16 | 174 | 5 | B | 14 | 16 | 438 | 6 | B | | | | 215 | 5 | B | |
| | 2 | 8 | 15 | 269 | 6 | B | 8 | 15 | 524 | 8 | C | | | | 343 | 7 | B | |
| | 3 | 6 | 13 | 60 | 5 | B | 6 | 13 | 550 | 10 | C | | | | 339 | 8 | C | |
| | 4 | 10 | 13 | 97 | 5 | B | 10 | 13 | 290 | 6 | B | | | | 313 | 6 | B | |
| | 5 | 13 | 16 | 164 | 5 | B | 13 | 16 | 207 | 5 | B | | | | 184 | 5 | B | |
| | 6 | 13 | 16 | 163 | 5 | B | 13 | 16 | 206 | 5 | B | | | | 183 | 5 | B | |
| | 7 | 11 | 14 | 160 | 5 | B | 11 | 14 | 295 | 6 | B | | | | 295 | 6 | B | |
| | 8 | 10 | 12 | 81 | 5 | B | 10 | 12 | 1180 | 12 | D | | | | 565 | 8 | C | |

# Appendix S.5.3

**Pedestrian Improvement Analysis - Sidewalks Level of Service**

**2010 Future Conditions (SUN)**

| Intersection | Walkway Location | 2010 Future without the Proposed Action | | | | | 2010 Future with the Proposed Action | | | | | | 2010 Future with the Proposed Action (Improvement) | | | | | |
|---|---|---|---|---|---|---|---|---|---|---|---|---|---|---|---|---|---|---|
| | | Effective Walkway width | Actual walkway width | Sidewalk Volumes | Platoon Flow Rate (ped/min/ft) | Platoon Level of Service | Effective Walkway width | Actual walkway width | Sidewalk Volumes | Platoon Flow Rate (ped/min/ft) | Platoon Level of Service | Impact? | Proposed Effective Walkwa | Proposed Actual walkway width | Sidewalk Volumes | Platoon Flow Rate (ped/min/ft) | Platoon Level of Service | Still Impact? |
| ***Ninth Ave @ 31st St*** | 1 | 12 | 15 | 31 | 4 | B | 12 | 15 | 81 | 4 | B | | | | 161 | 5 | B | |
| | 2 | 10 | 13 | 118 | 5 | B | 10 | 13 | 684 | 9 | C | | | | 128 | 5 | B | |
| | 3 | 10 | 13 | 429 | 7 | B | 10 | 13 | 2337 | 20 | E | Yes | | | 1352 | 13 | D | |
| | 4 | 10 | 13 | 21 | 4 | B | 10 | 13 | 574 | 8 | C | | | | 147 | 5 | B | |
| | 5 | 12 | 15 | 195 | 5 | B | 12 | 15 | 459 | 7 | B | | | | 278 | 6 | B | |
| | 6 | 12 | 15 | 115 | 5 | B | 12 | 15 | 365 | 6 | B | | | | 142 | 5 | B | |
| | 7 | 10 | 13 | 11 | 4 | B | 10 | 13 | 963 | 10 | C | | | | 421 | 7 | B | |
| | 8 | 10 | 13 | 101 | 5 | B | 10 | 13 | 1671 | 15 | D | | | | 729 | 9 | C | |
| ***Ninth Ave @ 33rd St*** | 1 | 12 | 15 | 65 | 4 | B | 12 | 15 | 214 | 5 | B | | | | 154 | 5 | B | |
| | 2 | 12 | 15 | 301 | 6 | B | 12 | 15 | 491 | 7 | B | | | | 443 | 6 | B | |
| | 3 | 10 | 13 | 78 | 5 | B | 10 | 13 | 567 | 8 | C | | | | 548 | 8 | C | |
| | 4 | 10 | 13 | 394 | 7 | B | 10 | 13 | 3342 | 26 | F | Yes | 30 | 35 | 5398 | 16 | E | Yes |
| | 5 | 12 | 15 | 88 | 4 | B | 12 | 15 | 648 | 8 | C | | | | 92 | 5 | B | |
| | 6 | 12 | 15 | 32 | 4 | B | 12 | 15 | 75 | 4 | B | | | | 155 | 5 | B | |
| | 7 | 10 | 13 | 138 | 5 | B | 10 | 13 | 2501 | 21 | E | Yes | 30 | 35 | 5060 | 15 | D | |
| | 8 | 10 | 13 | 79 | 5 | B | 10 | 13 | 801 | 9 | C | | | | 647 | 8 | C | |
| ***Ninth Ave @ 34th St*** | 1 | 11 | 15 | 89 | 5 | B | 11 | 15 | 155 | 5 | B | | | | 155 | 5 | B | |
| | 2 | 12 | 15 | 200 | 5 | B | 12 | 15 | 237 | 5 | B | | | | 237 | 5 | B | |
| | 3 | 19 | 23 | 208 | 5 | B | 19 | 23 | 359 | 5 | B | | | | 266 | 5 | B | |
| | 4 | 19 | 23 | 257 | 5 | B | 19 | 23 | 813 | 7 | B | | | | 491 | 6 | B | |
| | 5 | 12 | 15 | 332 | 6 | B | 12 | 15 | 517 | 7 | B | | | | 469 | 7 | B | |
| | 6 | 12 | 15 | 73 | 4 | B | 12 | 15 | 223 | 5 | B | | | | 163 | 5 | B | |
| | 7 | 16 | 20 | 146 | 5 | B | 16 | 20 | 575 | 6 | B | | | | 335 | 5 | B | |
| | 8 | 15 | 20 | 120 | 5 | B | 15 | 20 | 258 | 5 | B | | | | 191 | 5 | B | |
| ***Eighth Ave @ 30th St*** | 1 | 11 | 14 | 244 | 5 | B | 11 | 14 | 393 | 6 | B | | | | 286 | 6 | B | |
| | 2 | 11 | 15 | 242 | 5 | B | 11 | 15 | 526 | 7 | B | | | | 449 | 7 | B | |
| | 3 | 9 | 13 | 72 | 5 | B | 9 | 13 | 112 | 5 | B | | | | 84 | 5 | B | |
| | 4 | 11 | 14 | 33 | 4 | B | 11 | 14 | 41 | 4 | B | | | | 179 | 5 | B | |
| | 5 | 12 | 15 | 145 | 5 | B | 12 | 15 | 340 | 6 | B | | | | 203 | 5 | B | |
| | 6 | 11 | 14 | 142 | 5 | B | 11 | 14 | 311 | 6 | B | | | | 173 | 5 | B | |
| | 7 | 10 | 14 | 72 | 4 | B | 10 | 14 | 269 | 6 | B | | | | 269 | 6 | B | |
| | 8 | 10 | 13 | 100 | 5 | B | 10 | 13 | 594 | 8 | C | | | | 383 | 7 | B | |
| ***Eighth Ave @ 31st St*** | 1 | 12 | 16 | 171 | 5 | B | 12 | 16 | 230 | 5 | B | | | | 187 | 5 | B | |
| | 2 | 18 | 24 | 271 | 5 | B | 18 | 24 | 496 | 6 | B | | | | 444 | 6 | B | |
| | 3 | 35 | 49 | 307 | 5 | B | 35 | 49 | 951 | 6 | B | | | | 495 | 5 | B | |
| | 4 | 10 | 14 | 39 | 4 | B | 10 | 14 | 396 | 7 | B | | | | 282 | 6 | B | |
| | 5 | 12 | 15 | 208 | 5 | B | 12 | 15 | 485 | 7 | B | | | | 408 | 6 | B | |
| | 6 | 12 | 15 | 163 | 5 | B | 12 | 15 | 322 | 6 | B | | | | 215 | 5 | B | |
| | 7 | 10 | 13 | 23 | 4 | B | 10 | 13 | 580 | 8 | C | | | | 154 | 5 | B | |
| | 8 | 21 | 24 | 222 | 5 | B | 21 | 24 | 1669 | 9 | C | | | | 917 | 7 | B | |
| ***Eighth Ave @ 33rd St*** | 1 | 12 | 15 | 557 | 7 | B | 12 | 15 | 699 | 8 | C | | | | 736 | 8 | C | |
| | 2 | 12 | 19 | 551 | 7 | B | 12 | 19 | 801 | 8 | C | | | | 775 | 8 | C | |
| | 3 | 10 | 17 | 225 | 6 | B | 10 | 17 | 350 | 6 | B | | | | 352 | 6 | B | |
| | 4 | 30 | 43 | 432 | 5 | B | 30 | 43 | 700 | 6 | B | | | | 1395 | 7 | B | |
| | 5 | 30 | 43 | 180 | 4 | B | 30 | 43 | 410 | 5 | B | | | | 358 | 5 | B | |
| | 6 | 12 | 16 | 237 | 5 | B | 12 | 16 | 289 | 6 | B | | | | 246 | 5 | B | |
| | 7 | 13 | 24 | 475 | 6 | B | 13 | 24 | 2698 | 18 | E | Yes | 33 | 46 | 3824 | 12 | D | |
| | 8 | 7 | 14 | 161 | 6 | B | 7 | 14 | 561 | 9 | C | | | | 543 | 9 | C | |

# Appendix S.5.3

**Pedestrian Improvement Analysis - Sidewalks Level of Service**

**2010 Future Conditions (SUN)**

| Intersection | Walkway Location | 2010 Future without the Proposed Action | | | | | 2010 Future with the Proposed Action | | | | | | 2010 Future with the Proposed Action (Improvement) | | | | | |
|---|---|---|---|---|---|---|---|---|---|---|---|---|---|---|---|---|---|---|
| | | Effective Walkway width | Actual walkway width | Sidewalk Volumes | Platoon Flow Rate (ped/min/ft) | Platoon Level of Service | Effective Walkway width | Actual walkway width | Sidewalk Volumes | Platoon Flow Rate (ped/min/ft) | Platoon Level of Service | Impact? | Proposed Effective Walkwa | Proposed Actual walkway width | Sidewalk Volumes | Platoon Flow Rate (ped/min/ft) | Platoon Level of Service | Still Impact? |
| ***Eighth Ave @ 34th St*** | 1 | 11 | 15 | 322 | 6 | B | 11 | 15 | 373 | 6 | B | | | | 359 | 6 | B | |
| | 2 | 11 | 15 | 452 | 7 | B | 11 | 15 | 561 | 7 | B | | | | 547 | 7 | B | |
| | 3 | 19 | 22 | 583 | 6 | B | 19 | 22 | 692 | 6 | B | | | | 636 | 6 | B | |
| | 4 | 19 | 22 | 440 | 6 | B | 19 | 22 | 1063 | 8 | C | | | | 787 | 7 | B | |
| | 5 | 12 | 15 | 374 | 6 | B | 12 | 15 | 619 | 7 | B | | | | 594 | 7 | B | |
| | 6 | 11 | 15 | 433 | 7 | B | 11 | 15 | 569 | 7 | B | | | | 606 | 8 | C | |
| | 7 | 12 | 22 | 457 | 7 | B | 12 | 22 | 980 | 9 | C | | | | 658 | 8 | C | |
| | 8 | 18 | 22 | 286 | 5 | B | 18 | 22 | 433 | 6 | B | | | | 340 | 5 | B | |
| ***Sixth Ave @ 34th St*** | 1 | 0 | 0 | 0 | N/A | N/A | 0 | 0 | 0 | N/A | N/A | | | | 0 | N/A | N/A | |
| | 2 | 10 | 17 | 759 | 9 | C | 10 | 17 | 759 | 9 | C | | | | 759 | 9 | C | |
| | 3 | 20 | 23 | 541 | 6 | B | 20 | 23 | 557 | 6 | B | | | | 557 | 6 | B | |
| | 4 | 18 | 23 | 736 | 7 | B | 18 | 23 | 752 | 7 | B | | | | 752 | 7 | B | |
| | 5 | 14 | 17 | 390 | 6 | B | 14 | 17 | 390 | 6 | B | | | | 390 | 6 | B | |
| | 6 | 0 | 0 | 0 | N/A | N/A | 0 | 0 | 0 | N/A | N/A | | | | 0 | N/A | N/A | |
| | 7 | 0 | 0 | 0 | N/A | N/A | 0 | 0 | 0 | N/A | N/A | | | | 0 | N/A | N/A | |
| | 8 | 0 | 0 | 0 | N/A | N/A | 0 | 0 | 0 | N/A | N/A | | | | 0 | N/A | N/A | |
| ***Broadway @ 34th St*** | 1 | 25 | 30 | 814 | 6 | B | 25 | 30 | 844 | 6 | B | | | | 836 | 6 | B | |
| | 2 | 0 | 0 | 0 | N/A | N/A | 0 | 0 | 0 | N/A | N/A | | | | 0 | N/A | N/A | |
| | 3 | 0 | 0 | 0 | N/A | N/A | 0 | 0 | 0 | N/A | N/A | | | | 0 | N/A | N/A | |
| | 4 | 0 | 0 | 0 | N/A | N/A | 0 | 0 | 0 | N/A | N/A | | | | 0 | N/A | N/A | |
| | 5 | 0 | 0 | 0 | N/A | N/A | 0 | 0 | 0 | N/A | N/A | | | | 0 | N/A | N/A | |
| | 6 | 25 | 30 | 1054 | 7 | B | 25 | 30 | 1077 | 7 | B | | | | 1077 | 7 | B | |
| | 7 | 18 | 23 | 1081 | 8 | C | 18 | 23 | 1121 | 8 | C | | | | 1121 | 8 | C | |
| | 8 | 18 | 23 | 1002 | 8 | C | 18 | 23 | 1048 | 8 | C | | | | 1031 | 8 | C | |
| ***Blvd @ 33rd St*** | 1 | 0 | 0 | 0 | N/A | N/A | 10 | 10 | 132 | 5 | B | | | | 102 | 5 | B | |
| | 2 | 0 | 0 | 0 | N/A | N/A | 10 | 13 | 93 | 5 | B | | | | 57 | 4 | B | |
| | 3 | 0 | 0 | 0 | N/A | N/A | 10 | 13 | 1086 | 11 | D | | | | 826 | 10 | C | |
| | 4 | 0 | 0 | 0 | N/A | N/A | 10 | 13 | 2598 | 21 | E | | 30 | 35 | 3266 | 11 | D | |
| | 5 | 0 | 0 | 0 | N/A | N/A | 0 | 0 | 0 | N/A | N/A | | | | 0 | N/A | N/A | |
| | 6 | 0 | 0 | 0 | N/A | N/A | 0 | 0 | 0 | N/A | N/A | | | | 0 | N/A | N/A | |
| | 7 | 0 | 0 | 0 | N/A | N/A | 10 | 13 | 2986 | 24 | E | | 30 | 35 | 2289 | 9 | C | |
| | 8 | 0 | 0 | 0 | N/A | N/A | 10 | 13 | 921 | 10 | C | | | | 751 | 9 | C | |
| ***Blvd @ 34th St*** | 1 | 0 | 0 | 0 | N/A | N/A | 15 | 18 | 58 | 4 | B | | | | 58 | 4 | B | |
| | 2 | 0 | 0 | 0 | N/A | N/A | 10 | 13 | 29 | 4 | B | | | | 29 | 4 | B | |
| | 3 | 0 | 0 | 0 | N/A | N/A | 17 | 20 | 362 | 5 | B | | | | 319 | 5 | B | |
| | 4 | 0 | 0 | 0 | N/A | N/A | 17 | 20 | 461 | 6 | B | | | | 290 | 5 | B | |
| | 5 | 0 | 0 | 0 | N/A | N/A | 10 | 13 | 90 | 5 | B | | | | 53 | 4 | B | |
| | 6 | 0 | 0 | 0 | N/A | N/A | 10 | 13 | 95 | 5 | B | | | | 65 | 4 | B | |
| | 7 | 0 | 0 | 0 | N/A | N/A | 17 | 20 | 655 | 7 | B | | | | 387 | 6 | B | |
| | 8 | 0 | 0 | 0 | N/A | N/A | 26 | 30 | 364 | 5 | B | | | | 337 | 5 | B | |

# Appendix S.5.3

**Pedestrian Improvement Analysis - Sidewalks Level of Service**

**2025 Future Conditions (AM)**

| Intersection | Walkway Location | 2025 Future without the Proposed Action | | | | | 2025 Future with the Proposed Action | | | | | | 2025 Future with the Proposed Action (Improvement) | | | | | |
|---|---|---|---|---|---|---|---|---|---|---|---|---|---|---|---|---|---|---|
| | | Effective Walkway width | Actual walkway width | Sidewalk Volumes | Platoon Flow Rate (ped/min/ft) | Platoon Level of Service | Effective Walkway width | Actual walkway width | Sidewalk Volumes | Platoon Flow Rate (ped/min/ft) | Platoon Level of Service | Impact? | Proposed Effective Walkwa | Proposed Actual walkway width | Sidewalk Volumes | Platoon Flow Rate (ped/min/ft) | Platoon Level of Service | Still Impact? |
| ***Twelfth Ave @ 30th St*** | 1 | 0 | 0 | 0 | N/A | N/A | 0 | 0 | 0 | N/A | N/A | | | | 0 | N/A | N/A | |
| | 2 | 9 | 11 | 0 | 4 | B | 9 | 11 | 0 | 4 | B | | | | 0 | 4 | B | |
| | 3 | 10 | 13 | 0 | 4 | B | 10 | 13 | 0 | 4 | B | | | | 0 | 4 | B | |
| | 4 | 10 | 13 | 2 | 4 | B | 10 | 13 | 2 | 4 | B | | | | 2 | 4 | B | |
| | 5 | 12 | 15 | 4 | 4 | B | 12 | 15 | 4 | 4 | B | | | | 4 | 4 | B | |
| | 6 | 0 | 0 | 0 | N/A | N/A | 0 | 0 | 0 | N/A | N/A | | | | 0 | N/A | N/A | |
| | 7 | 0 | 0 | 0 | N/A | N/A | 0 | 0 | 0 | N/A | N/A | | | | 0 | N/A | N/A | |
| | 8 | 0 | 0 | 0 | N/A | N/A | 0 | 0 | 0 | N/A | N/A | | | | 0 | N/A | N/A | |
| ***Twelfth Ave @ 34th St*** | 1 | 0 | 0 | 0 | N/A | N/A | 0 | 0 | 0 | N/A | N/A | | | | 0 | N/A | N/A | |
| | 2 | 9 | 12 | 0 | 4 | B | 9 | 12 | 3 | 4 | B | | | | 3 | 4 | B | |
| | 3 | 15 | 18 | 14 | 4 | B | 15 | 18 | 15 | 4 | B | | | | 15 | 4 | B | |
| | 4 | 15 | 18 | 47 | 4 | B | 15 | 18 | 51 | 4 | B | | | | 51 | 4 | B | |
| | 5 | 9 | 12 | 0 | 4 | B | 9 | 12 | 0 | 4 | B | | | | 0 | 4 | B | |
| | 6 | 0 | 0 | 0 | N/A | N/A | 0 | 0 | 0 | N/A | N/A | | | | 0 | N/A | N/A | |
| | 7 | 0 | 0 | 0 | N/A | N/A | 0 | 0 | 0 | N/A | N/A | | | | 0 | N/A | N/A | |
| | 8 | 0 | 0 | 0 | N/A | N/A | 0 | 0 | 0 | N/A | N/A | | | | 0 | N/A | N/A | |
| ***Twelfth Ave @ 39th St*** | 1 | 0 | 0 | 0 | N/A | N/A | 0 | 0 | 0 | N/A | N/A | | | | 0 | N/A | N/A | |
| | 2 | 10 | 13 | 0 | 4 | B | 10 | 13 | 0 | 4 | B | | | | 0 | 4 | B | |
| | 3 | 10 | 13 | 0 | 4 | B | 0 | 0 | 0 | N/A | N/A | | | | 0 | N/A | N/A | |
| | 4 | 10 | 13 | 27 | 4 | B | 0 | 0 | 0 | N/A | N/A | | | | 0 | N/A | N/A | |
| | 5 | 15 | 18 | 3 | 4 | B | 15 | 18 | 6 | 4 | B | | | | 6 | 4 | B | |
| | 6 | 0 | 0 | 0 | N/A | N/A | 0 | 0 | 0 | N/A | N/A | | | | 0 | N/A | N/A | |
| | 7 | 0 | 0 | 0 | N/A | N/A | 0 | 0 | 0 | N/A | N/A | | | | 0 | N/A | N/A | |
| | 8 | 0 | 0 | 0 | N/A | N/A | 0 | 0 | 0 | N/A | N/A | | | | 0 | N/A | N/A | |
| ***Twelfth Ave @ 40th St*** | 1 | 0 | 0 | 0 | N/A | N/A | 0 | 0 | 0 | N/A | N/A | | | | 0 | N/A | N/A | |
| | 2 | 10 | 13 | 0 | 4 | B | 10 | 13 | 0 | 4 | B | | | | 0 | 4 | B | |
| | 3 | 9 | 11 | 0 | 4 | B | 0 | 0 | 0 | N/A | N/A | | | | 0 | N/A | N/A | |
| | 4 | 9 | 12 | 0 | 4 | B | 0 | 0 | 0 | N/A | N/A | | | | 0 | N/A | N/A | |
| | 5 | 11 | 14 | 0 | 4 | B | 11 | 14 | 0 | 4 | B | | | | 0 | 4 | B | |
| | 6 | 0 | 0 | 0 | N/A | N/A | 0 | 0 | 0 | N/A | N/A | | | | 0 | N/A | N/A | |
| | 7 | 0 | 0 | 0 | N/A | N/A | 0 | 0 | 0 | N/A | N/A | | | | 0 | N/A | N/A | |
| | 8 | 0 | 0 | 0 | N/A | N/A | 0 | 0 | 0 | N/A | N/A | | | | 0 | N/A | N/A | |
| ***Twelfth Ave @ 42nd St*** | 1 | 0 | 0 | 0 | N/A | N/A | 0 | 0 | 0 | N/A | N/A | | | | 0 | N/A | N/A | |
| | 2 | 17 | 20 | 15 | 4 | B | 17 | 20 | 9 | 4 | B | | | | 9 | 4 | B | |
| | 3 | 12 | 15 | 60 | 4 | B | 12 | 15 | 52 | 4 | B | | | | 52 | 4 | B | |
| | 4 | 23 | 26 | 72 | 4 | B | 23 | 26 | 76 | 4 | B | | | | 76 | 4 | B | |
| | 5 | 17 | 20 | 5 | 4 | B | 17 | 20 | 5 | 4 | B | | | | 5 | 4 | B | |
| | 6 | 0 | 0 | 0 | N/A | N/A | 0 | 0 | 0 | N/A | N/A | | | | 0 | N/A | N/A | |
| | 7 | 0 | 0 | 0 | N/A | N/A | 0 | 0 | 0 | N/A | N/A | | | | 0 | N/A | N/A | |
| | 8 | 0 | 0 | 0 | N/A | N/A | 0 | 0 | 0 | N/A | N/A | | | | 0 | N/A | N/A | |
| ***Eleventh Ave @ 29th St*** | 1 | 12 | 15 | 5 | 4 | B | 12 | 15 | 104 | 5 | B | | | | 104 | 5 | B | |
| | 2 | 12 | 15 | 22 | 4 | B | 12 | 15 | 161 | 5 | B | | | | 161 | 5 | B | |
| | 3 | 10 | 13 | 7 | 4 | B | 10 | 13 | 36 | 4 | B | | | | 36 | 4 | B | |
| | 4 | 10 | 13 | 12 | 4 | B | 10 | 13 | 22 | 4 | B | | | | 22 | 4 | B | |
| | 5 | 12 | 15 | 30 | 4 | B | 12 | 15 | 141 | 5 | B | | | | 141 | 5 | B | |
| | 6 | 12 | 15 | 3 | 4 | B | 12 | 15 | 90 | 5 | B | | | | 90 | 5 | B | |
| | 7 | 10 | 13 | 0 | 4 | B | 10 | 13 | 0 | 4 | B | | | | 0 | 4 | B | |
| | 8 | 10 | 13 | 0 | 4 | B | 10 | 13 | 0 | 4 | B | | | | 0 | 4 | B | |

# Appendix S.5.3

**Pedestrian Improvement Analysis - Sidewalks Level of Service**

**2025 Future Conditions (AM)**

| Intersection | Walkway Location | 2025 Future without the Proposed Action | | | | | 2025 Future with the Proposed Action | | | | | | 2025 Future with the Proposed Action (Improvement) | | | | | |
|---|---|---|---|---|---|---|---|---|---|---|---|---|---|---|---|---|---|---|
| | | Effective Walkway width | Actual walkway width | Sidewalk Volumes | Platoon Flow Rate (ped/min/ft) | Platoon Level of Service | Effective Walkway width | Actual walkway width | Sidewalk Volumes | Platoon Flow Rate (ped/min/ft) | Platoon Level of Service | Impact? | Proposed Effective Walkwa | Proposed Actual walkway width | Sidewalk Volumes | Platoon Flow Rate (ped/min/ft) | Platoon Level of Service | Still Impact? |
| ***Eleventh Ave @ 30th St*** | 1 | 12 | 15 | 4 | 4 | B | 12 | 15 | 52 | 4 | B | | | | 52 | 4 | B | |
| | 2 | 12 | 15 | 24 | 4 | B | 17 | 20 | 168 | 5 | B | | | | 168 | 5 | B | |
| | 3 | 10 | 13 | 13 | 4 | B | 10 | 13 | 124 | 5 | B | | | | 124 | 5 | B | |
| | 4 | 10 | 13 | 6 | 4 | B | 10 | 13 | 22 | 4 | B | | | | 22 | 4 | B | |
| | 5 | 12 | 15 | 27 | 4 | B | 12 | 15 | 191 | 5 | B | | | | 191 | 5 | B | |
| | 6 | 12 | 15 | 8 | 4 | B | 12 | 15 | 133 | 5 | B | | | | 133 | 5 | B | |
| | 7 | 10 | 13 | 1 | 4 | B | 10 | 13 | 1 | 4 | B | | | | 1 | 4 | B | |
| | 8 | 10 | 13 | 2 | 4 | B | 10 | 13 | 14 | 4 | B | | | | 14 | 4 | B | |
| ***Eleventh Ave @ 33rd St*** | 1 | 12 | 15 | 10 | 4 | B | 12 | 15 | 134 | 5 | B | | | | 134 | 5 | B | |
| | 2 | 12 | 15 | 30 | 4 | B | 17 | 20 | 215 | 5 | B | | | | 215 | 5 | B | |
| | 3 | 10 | 13 | 15 | 4 | B | 15 | 18 | 89 | 4 | B | | | | 89 | 4 | B | |
| | 4 | 10 | 13 | 2 | 4 | B | 10 | 13 | 131 | 5 | B | | | | 131 | 5 | B | |
| | 5 | 12 | 15 | 16 | 4 | B | 17 | 20 | 231 | 5 | B | | | | 231 | 5 | B | |
| | 6 | 12 | 15 | 6 | 4 | B | 12 | 15 | 45 | 4 | B | | | | 45 | 4 | B | |
| | 7 | 10 | 13 | 5 | 4 | B | 0 | 0 | 0 | N/A | N/A | | | | 0 | N/A | N/A | |
| | 8 | 10 | 13 | 1 | 4 | B | 0 | 0 | 0 | N/A | N/A | | | | 0 | N/A | N/A | |
| ***Eleventh Ave @ 34th St*** | 1 | 13 | 15 | 5 | 4 | B | 13 | 15 | 179 | 5 | B | | | | 179 | 5 | B | |
| | 2 | 9 | 12 | 19 | 4 | B | 14 | 17 | 288 | 5 | B | | | | 288 | 5 | B | |
| | 3 | 17 | 20 | 39 | 4 | B | 26 | 30 | 134 | 4 | B | | | | 134 | 4 | B | |
| | 4 | 17 | 20 | 23 | 4 | B | 26 | 30 | 111 | 4 | B | | | | 111 | 4 | B | |
| | 5 | 12 | 15 | 43 | 4 | B | 17 | 20 | 273 | 5 | B | | | | 273 | 5 | B | |
| | 6 | 12 | 15 | 0 | 4 | B | 12 | 15 | 159 | 5 | B | | | | 159 | 5 | B | |
| | 7 | 17 | 20 | 53 | 4 | B | 17 | 20 | 57 | 4 | B | | | | 57 | 4 | B | |
| | 8 | 17 | 20 | 27 | 4 | B | 17 | 20 | 28 | 4 | B | | | | 28 | 4 | B | |
| ***Eleventh Ave @ 35th St*** | 1 | 16 | 19 | 7 | 4 | B | 16 | 19 | 74 | 4 | B | | | | 74 | 4 | B | |
| | 2 | 14 | 15 | 17 | 4 | B | 14 | 15 | 593 | 7 | B | | | | 593 | 7 | B | |
| | 3 | 12 | 14 | 0 | 4 | B | 20 | 24 | 146 | 4 | B | | | | 146 | 4 | B | |
| | 4 | 12 | 14 | 2 | 4 | B | 17 | 19 | 94 | 4 | B | | | | 94 | 4 | B | |
| | 5 | 8 | 11 | 12 | 4 | B | 13 | 16 | 523 | 7 | B | | | | 523 | 7 | B | |
| | 6 | 12 | 15 | 7 | 4 | B | 12 | 15 | 182 | 5 | B | | | | 182 | 5 | B | |
| | 7 | 0 | 0 | 0 | N/A | N/A | 0 | 0 | 0 | N/A | N/A | | | | 0 | N/A | N/A | |
| | 8 | 0 | 0 | 0 | N/A | N/A | 0 | 0 | 0 | N/A | N/A | | | | 0 | N/A | N/A | |
| ***Eleventh Ave @ 36th St*** | 1 | 12 | 15 | 6 | 4 | B | 12 | 15 | 104 | 5 | B | | | | 104 | 5 | B | |
| | 2 | 7 | 9 | 13 | 4 | B | 12 | 15 | 801 | 8 | C | | | | 801 | 8 | C | |
| | 3 | 10 | 13 | 0 | 4 | B | 18 | 22 | 243 | 5 | B | | | | 243 | 5 | B | |
| | 4 | 8 | 10 | 5 | 4 | B | 15 | 18 | 371 | 6 | B | | | | 371 | 6 | B | |
| | 5 | 12 | 15 | 12 | 4 | B | 18 | 20 | 1901 | 11 | D | | | | 1901 | 11 | D | |
| | 6 | 13 | 17 | 10 | 4 | B | 13 | 17 | 77 | 4 | B | | | | 77 | 4 | B | |
| | 7 | 0 | 0 | 0 | N/A | N/A | 0 | 0 | 0 | N/A | N/A | | | | 0 | N/A | N/A | |
| | 8 | 0 | 0 | 0 | N/A | N/A | 0 | 0 | 0 | N/A | N/A | | | | 0 | N/A | N/A | |
| ***Eleventh Ave @ 37th St*** | 1 | 12 | 15 | 1 | 4 | B | 12 | 15 | 53 | 4 | B | | | | 53 | 4 | B | |
| | 2 | 7 | 10 | 10 | 4 | B | 12 | 15 | 406 | 6 | B | | | | 406 | 6 | B | |
| | 3 | 9 | 12 | 0 | 4 | B | 18 | 22 | 272 | 5 | B | | | | 272 | 5 | B | |
| | 4 | 9 | 12 | 1 | 4 | B | 14 | 17 | 53 | 4 | B | | | | 53 | 4 | B | |
| | 5 | 7 | 10 | 10 | 4 | B | 12 | 15 | 612 | 7 | B | | | | 612 | 7 | B | |
| | 6 | 12 | 15 | 0 | 4 | B | 12 | 15 | 96 | 5 | B | | | | 96 | 5 | B | |
| | 7 | 0 | 0 | 0 | N/A | N/A | 0 | 0 | 0 | N/A | N/A | | | | 0 | N/A | N/A | |
| | 8 | 0 | 0 | 0 | N/A | N/A | 0 | 0 | 0 | N/A | N/A | | | | 0 | N/A | N/A | |

# Appendix S.5.3

**Pedestrian Improvement Analysis - Sidewalks Level of Service**

**2025 Future Conditions (AM)**

| Intersection | Walkway Location | 2025 Future without the Proposed Action | | | | | 2025 Future with the Proposed Action | | | | | | 2025 Future with the Proposed Action (Improvement) | | | | | |
|---|---|---|---|---|---|---|---|---|---|---|---|---|---|---|---|---|---|---|
| | | Effective Walkway width | Actual walkway width | Sidewalk Volumes | Platoon Flow Rate (ped/min/ft) | Platoon Level of Service | Effective Walkway width | Actual walkway width | Sidewalk Volumes | Platoon Flow Rate (ped/min/ft) | Platoon Level of Service | Impact? | Proposed Effective Walkwa | Proposed Actual walkway width | Sidewalk Volumes | Platoon Flow Rate (ped/min/ft) | Platoon Level of Service | Still Impact? |
| ***Eleventh Ave @ 38th St*** | 1 | 12 | 15 | 3 | 4 | B | 12 | 15 | 65 | 4 | B | | | | 65 | 4 | B | |
| | 2 | 7 | 10 | 1 | 4 | B | 12 | 15 | 172 | 5 | B | | | | 172 | 5 | B | |
| | 3 | 8 | 11 | 4 | 4 | B | 18 | 22 | 62 | 4 | B | | | | 62 | 4 | B | |
| | 4 | 8 | 11 | 1 | 4 | B | 14 | 17 | 91 | 4 | B | | | | 91 | 4 | B | |
| | 5 | 7 | 10 | 8 | 4 | B | 12 | 15 | 185 | 5 | B | | | | 185 | 5 | B | |
| | 6 | 12 | 15 | 0 | 4 | B | 12 | 15 | 52 | 4 | B | | | | 52 | 4 | B | |
| | 7 | 0 | 0 | 0 | N/A | N/A | 0 | 0 | 0 | N/A | N/A | | | | 0 | N/A | N/A | |
| | 8 | 0 | 0 | 0 | N/A | N/A | 0 | 0 | 0 | N/A | N/A | | | | 0 | N/A | N/A | |
| ***Eleventh Ave @ 39th St*** | 1 | 11 | 14 | 86 | 5 | B | 11 | 14 | 197 | 5 | B | | | | 197 | 5 | B | |
| | 2 | 7 | 10 | 3 | 4 | B | 12 | 15 | 178 | 5 | B | | | | 178 | 5 | B | |
| | 3 | 9 | 12 | 0 | 4 | B | 9 | 12 | 11 | 4 | B | | | | 11 | 4 | B | |
| | 4 | 8 | 11 | 32 | 4 | B | 15 | 18 | 110 | 4 | B | | | | 110 | 4 | B | |
| | 5 | 7 | 10 | 10 | 4 | B | 12 | 15 | 266 | 5 | B | | | | 266 | 5 | B | |
| | 6 | 12 | 15 | 45 | 4 | B | 12 | 15 | 107 | 5 | B | | | | 107 | 5 | B | |
| | 7 | 10 | 13 | 27 | 4 | B | 0 | 0 | 0 | N/A | N/A | | | | 0 | N/A | N/A | |
| | 8 | 12 | 15 | 1 | 4 | B | 0 | 0 | 0 | N/A | N/A | | | | 0 | N/A | N/A | |
| ***Eleventh Ave @ 40th St*** | 1 | 12 | 15 | 30 | 4 | B | 12 | 15 | 99 | 5 | B | | | | 99 | 5 | B | |
| | 2 | 7 | 10 | 5 | 4 | B | 12 | 15 | 157 | 5 | B | | | | 157 | 5 | B | |
| | 3 | 10 | 13 | 3 | 4 | B | 14 | 18 | 106 | 5 | B | | | | 106 | 5 | B | |
| | 4 | 10 | 13 | 1 | 4 | B | 15 | 18 | 3 | 4 | B | | | | 3 | 4 | B | |
| | 5 | 7 | 10 | 0 | 4 | B | 12 | 15 | 171 | 5 | B | | | | 171 | 5 | B | |
| | 6 | 12 | 15 | 17 | 4 | B | 12 | 15 | 128 | 5 | B | | | | 128 | 5 | B | |
| | 7 | 10 | 13 | 1 | 4 | B | 0 | 0 | 0 | N/A | N/A | | | | 0 | N/A | N/A | |
| | 8 | 10 | 13 | 12 | 4 | B | 0 | 0 | 0 | N/A | N/A | | | | 0 | N/A | N/A | |
| ***Eleventh Ave @ 42nd St*** | 1 | 13 | 16 | 45 | 4 | B | 13 | 16 | 93 | 4 | B | | | | 93 | 4 | B | |
| | 2 | 13 | 16 | 29 | 4 | B | 13 | 16 | 136 | 5 | B | | | | 136 | 5 | B | |
| | 3 | 12 | 15 | 148 | 5 | B | 12 | 15 | 117 | 5 | B | | | | 117 | 5 | B | |
| | 4 | 12 | 15 | 108 | 5 | B | 12 | 15 | 425 | 6 | B | | | | 425 | 6 | B | |
| | 5 | 12 | 16 | 10 | 4 | B | 12 | 16 | 180 | 5 | B | | | | 180 | 5 | B | |
| | 6 | 12 | 15 | 87 | 4 | B | 12 | 15 | 129 | 5 | B | | | | 129 | 5 | B | |
| | 7 | 12 | 16 | 70 | 4 | B | 12 | 16 | 76 | 4 | B | | | | 76 | 4 | B | |
| | 8 | 12 | 16 | 129 | 5 | B | 12 | 16 | 56 | 4 | B | | | | 56 | 4 | B | |
| ***Tenth Ave @ 29th St*** | 1 | 12 | 15 | 59 | 4 | B | 12 | 15 | 357 | 6 | B | | | | 357 | 6 | B | |
| | 2 | 12 | 15 | 30 | 4 | B | 12 | 15 | 129 | 5 | B | | | | 129 | 5 | B | |
| | 3 | 10 | 13 | 35 | 4 | B | 10 | 13 | 64 | 4 | B | | | | 64 | 4 | B | |
| | 4 | 10 | 13 | 31 | 4 | B | 10 | 13 | 60 | 4 | B | | | | 60 | 4 | B | |
| | 5 | 12 | 15 | 25 | 4 | B | 12 | 15 | 109 | 5 | B | | | | 109 | 5 | B | |
| | 6 | 12 | 15 | 94 | 5 | B | 12 | 15 | 322 | 6 | B | | | | 322 | 6 | B | |
| | 7 | 10 | 13 | 35 | 4 | B | 10 | 13 | 48 | 4 | B | | | | 48 | 4 | B | |
| | 8 | 10 | 13 | 20 | 4 | B | 10 | 13 | 31 | 4 | B | | | | 31 | 4 | B | |
| ***Tenth Ave @ 30th St*** | 1 | 13 | 16 | 49 | 4 | B | 13 | 16 | 363 | 6 | B | | | | 363 | 6 | B | |
| | 2 | 12 | 15 | 35 | 4 | B | 12 | 15 | 152 | 5 | B | | | | 152 | 5 | B | |
| | 3 | 10 | 13 | 21 | 4 | B | 10 | 13 | 182 | 5 | B | | | | 182 | 5 | B | |
| | 4 | 12 | 15 | 24 | 4 | B | 12 | 15 | 65 | 4 | B | | | | 65 | 4 | B | |
| | 5 | 12 | 15 | 42 | 4 | B | 12 | 15 | 171 | 5 | B | | | | 171 | 5 | B | |
| | 6 | 12 | 15 | 65 | 4 | B | 12 | 15 | 393 | 6 | B | | | | 393 | 6 | B | |
| | 7 | 11 | 14 | 19 | 4 | B | 11 | 14 | 40 | 4 | B | | | | 40 | 4 | B | |
| | 8 | 11 | 14 | 16 | 4 | B | 11 | 14 | 294 | 6 | B | | | | 294 | 6 | B | |

# Appendix S.5.3

**Pedestrian Improvement Analysis - Sidewalks Level of Service**

**2025 Future Conditions (AM)**

| Intersection | Walkway Location | 2025 Future without the Proposed Action | | | | | 2025 Future with the Proposed Action | | | | | | 2025 Future with the Proposed Action (Improvement) | | | | | |
|---|---|---|---|---|---|---|---|---|---|---|---|---|---|---|---|---|---|---|
| | | Effective Walkway width | Actual walkway width | Sidewalk Volumes | Platoon Flow Rate (ped/min/ft) | Platoon Level of Service | Effective Walkway width | Actual walkway width | Sidewalk Volumes | Platoon Flow Rate (ped/min/ft) | Platoon Level of Service | Impact? | Proposed Effective Walkwa | Proposed Actual walkway width | Sidewalk Volumes | Platoon Flow Rate (ped/min/ft) | Platoon Level of Service | Still Impact? |
| ***Tenth Ave @ 31st St*** | 1 | 12 | 15 | 43 | 4 | B | 12 | 15 | 793 | 8 | C | | | | 793 | 8 | C | |
| | 2 | 12 | 15 | 50 | 4 | B | 12 | 15 | 178 | 5 | B | | | | 178 | 5 | B | |
| | 3 | 11 | 13 | 32 | 4 | B | 11 | 13 | 533 | 7 | B | | | | 533 | 7 | B | |
| | 4 | 11 | 13 | 13 | 4 | B | 11 | 13 | 114 | 5 | B | | | | 114 | 5 | B | |
| | 5 | 12 | 15 | 50 | 4 | B | 12 | 15 | 202 | 5 | B | | | | 202 | 5 | B | |
| | 6 | 12 | 15 | 49 | 4 | B | 12 | 15 | 368 | 6 | B | | | | 368 | 6 | B | |
| | 7 | 0 | 0 | 0 | N/A | N/A | 0 | 0 | 0 | N/A | N/A | | | | 0 | N/A | N/A | |
| | 8 | 0 | 0 | 0 | N/A | N/A | 0 | 0 | 0 | N/A | N/A | | | | 0 | N/A | N/A | |
| ***Tenth Ave @ 33rd St*** | 1 | 12 | 15 | 66 | 4 | B | 12 | 15 | 952 | 9 | C | | | | 952 | 9 | C | |
| | 2 | 12 | 15 | 47 | 4 | B | 12 | 15 | 393 | 6 | B | | | | 393 | 6 | B | |
| | 3 | 10 | 13 | 43 | 4 | B | 10 | 13 | 758 | 9 | C | | | | 758 | 9 | C | |
| | 4 | 10 | 13 | 73 | 4 | B | 10 | 13 | 1504 | 14 | D | | | | 1504 | 14 | D | |
| | 5 | 12 | 15 | 35 | 4 | B | 12 | 15 | 260 | 5 | B | | | | 260 | 5 | B | |
| | 6 | 12 | 15 | 46 | 4 | B | 12 | 15 | 706 | 8 | C | | | | 706 | 8 | C | |
| | 7 | 10 | 13 | 42 | 4 | B | 10 | 13 | 1120 | 11 | D | | | | 1120 | 11 | D | |
| | 8 | 10 | 13 | 32 | 4 | B | 15 | 18 | 723 | 7 | B | | | | 723 | 7 | B | |
| ***Tenth Ave @ 34th St*** | 1 | 12 | 15 | 34 | 4 | B | 12 | 15 | 718 | 8 | C | | | | 718 | 8 | C | |
| | 2 | 12 | 15 | 38 | 4 | B | 12 | 15 | 358 | 6 | B | | | | 358 | 6 | B | |
| | 3 | 17 | 20 | 117 | 4 | B | 17 | 20 | 568 | 6 | B | | | | 568 | 6 | B | |
| | 4 | 17 | 20 | 165 | 5 | B | 17 | 20 | 936 | 8 | C | | | | 936 | 8 | C | |
| | 5 | 12 | 15 | 61 | 4 | B | 12 | 15 | 463 | 7 | B | | | | 463 | 7 | B | |
| | 6 | 12 | 15 | 31 | 4 | B | 12 | 15 | 956 | 9 | C | | | | 956 | 9 | C | |
| | 7 | 17 | 20 | 96 | 4 | B | 26 | 30 | 492 | 5 | B | | | | 492 | 5 | B | |
| | 8 | 17 | 20 | 131 | 5 | B | 26 | 30 | 759 | 6 | B | | | | 759 | 6 | B | |
| ***Tenth Ave @ 35th St*** | 1 | 13 | 16 | 18 | 4 | B | 13 | 16 | 541 | 7 | B | | | | 541 | 7 | B | |
| | 2 | 13 | 15 | 10 | 4 | B | 13 | 15 | 328 | 6 | B | | | | 328 | 6 | B | |
| | 3 | 12 | 15 | 50 | 4 | B | 12 | 15 | 507 | 7 | B | | | | 507 | 7 | B | |
| | 4 | 7 | 9 | 24 | 4 | B | 7 | 9 | 450 | 8 | C | | | | 450 | 8 | C | |
| | 5 | 13 | 15 | 5 | 4 | B | 13 | 15 | 326 | 6 | B | | | | 326 | 6 | B | |
| | 6 | 11 | 15 | 28 | 4 | B | 11 | 15 | 749 | 9 | C | | | | 749 | 9 | C | |
| | 7 | 10 | 13 | 32 | 4 | B | 15 | 18 | 267 | 5 | B | | | | 267 | 5 | B | |
| | 8 | 12 | 14 | 35 | 4 | B | 20 | 24 | 515 | 6 | B | | | | 515 | 6 | B | |
| ***Tenth Ave @ 36th St*** | 1 | 12 | 15 | 12 | 4 | B | 12 | 15 | 415 | 6 | B | | | | 415 | 6 | B | |
| | 2 | 10 | 16 | 16 | 4 | B | 10 | 16 | 309 | 6 | B | | | | 309 | 6 | B | |
| | 3 | 9 | 12 | 16 | 4 | B | 9 | 12 | 256 | 6 | B | | | | 256 | 6 | B | |
| | 4 | 9 | 12 | 19 | 4 | B | 9 | 12 | 141 | 5 | B | | | | 141 | 5 | B | |
| | 5 | 12 | 15 | 19 | 4 | B | 12 | 15 | 323 | 6 | B | | | | 323 | 6 | B | |
| | 6 | 12 | 15 | 13 | 4 | B | 12 | 15 | 478 | 7 | B | | | | 478 | 7 | B | |
| | 7 | 9 | 12 | 13 | 4 | B | 15 | 18 | 112 | 4 | B | | | | 112 | 4 | B | |
| | 8 | 10 | 12 | 16 | 4 | B | 18 | 22 | 195 | 5 | B | | | | 195 | 5 | B | |
| ***Tenth Ave @ 37th St*** | 1 | 5 | 15 | 12 | 4 | B | 12 | 15 | 387 | 6 | B | | | | 387 | 6 | B | |
| | 2 | 5 | 15 | 31 | 4 | B | 5 | 15 | 375 | 9 | C | | | | 375 | 9 | C | |
| | 3 | 9 | 12 | 25 | 4 | B | 9 | 12 | 278 | 6 | B | | | | 278 | 6 | B | |
| | 4 | 9 | 12 | 35 | 4 | B | 9 | 12 | 208 | 6 | B | | | | 208 | 6 | B | |
| | 5 | 12 | 15 | 22 | 4 | B | 12 | 15 | 307 | 6 | B | | | | 307 | 6 | B | |
| | 6 | 12 | 15 | 7 | 4 | B | 12 | 15 | 429 | 6 | B | | | | 429 | 6 | B | |
| | 7 | 9 | 12 | 18 | 4 | B | 14 | 17 | 99 | 4 | B | | | | 99 | 4 | B | |
| | 8 | 9 | 12 | 16 | 4 | B | 18 | 22 | 300 | 5 | B | | | | 300 | 5 | B | |

# Appendix S.5.3

**Pedestrian Improvement Analysis - Sidewalks Level of Service**

**2025 Future Conditions (AM)**

| Intersection | Walkway Location | 2025 Future without the Proposed Action | | | | | 2025 Future with the Proposed Action | | | | | | 2025 Future with the Proposed Action (Improvement) | | | | | |
|---|---|---|---|---|---|---|---|---|---|---|---|---|---|---|---|---|---|---|
| | | Effective Walkway width | Actual walkway width | Sidewalk Volumes | Platoon Flow Rate (ped/min/ft) | Platoon Level of Service | Effective Walkway width | Actual walkway width | Sidewalk Volumes | Platoon Flow Rate (ped/min/ft) | Platoon Level of Service | Impact? | Proposed Effective Walkwa | Proposed Actual walkway width | Sidewalk Volumes | Platoon Flow Rate (ped/min/ft) | Platoon Level of Service | Still Impact? |
| ***Tenth Ave @ 38th St*** | 1 | 12 | 15 | 22 | 4 | B | 12 | 15 | 451 | 7 | B | | | | 451 | 7 | B | |
| | 2 | 12 | 15 | 22 | 4 | B | 12 | 15 | 318 | 6 | B | | | | 318 | 6 | B | |
| | 3 | 9 | 12 | 16 | 4 | B | 9 | 12 | 216 | 6 | B | | | | 216 | 6 | B | |
| | 4 | 9 | 12 | 4 | 4 | B | 9 | 12 | 153 | 5 | B | | | | 153 | 5 | B | |
| | 5 | 12 | 15 | 11 | 4 | B | 12 | 15 | 344 | 6 | B | | | | 344 | 6 | B | |
| | 6 | 12 | 15 | 17 | 4 | B | 12 | 15 | 419 | 6 | B | | | | 419 | 6 | B | |
| | 7 | 9 | 12 | 5 | 4 | B | 14 | 17 | 173 | 5 | B | | | | 173 | 5 | B | |
| | 8 | 9 | 12 | 15 | 4 | B | 18 | 22 | 293 | 5 | B | | | | 293 | 5 | B | |
| ***Tenth Ave @ 39th St*** | 1 | 12 | 15 | 11 | 4 | B | 12 | 15 | 478 | 7 | B | | | | 478 | 7 | B | |
| | 2 | 12 | 15 | 20 | 4 | B | 12 | 15 | 508 | 7 | B | | | | 508 | 7 | B | |
| | 3 | 9 | 12 | 15 | 4 | B | 9 | 12 | 88 | 5 | B | | | | 88 | 5 | B | |
| | 4 | 9 | 12 | 24 | 4 | B | 9 | 12 | 181 | 5 | B | | | | 181 | 5 | B | |
| | 5 | 12 | 15 | 28 | 4 | B | 12 | 15 | 297 | 6 | B | | | | 297 | 6 | B | |
| | 6 | 12 | 15 | 14 | 4 | B | 12 | 15 | 470 | 7 | B | | | | 470 | 7 | B | |
| | 7 | 10 | 13 | 15 | 4 | B | 15 | 18 | 226 | 5 | B | | | | 226 | 5 | B | |
| | 8 | 7 | 10 | 15 | 4 | B | 7 | 10 | 233 | 6 | B | | | | 233 | 6 | B | |
| ***Tenth Ave @ 40th St*** | 1 | 12 | 15 | 7 | 4 | B | 12 | 15 | 554 | 7 | B | | | | 554 | 7 | B | |
| | 2 | 12 | 15 | 41 | 4 | B | 12 | 15 | 708 | 8 | C | | | | 708 | 8 | C | |
| | 3 | 9 | 12 | 14 | 4 | B | 9 | 12 | 228 | 6 | B | | | | 228 | 6 | B | |
| | 4 | 9 | 12 | 9 | 4 | B | 9 | 12 | 48 | 4 | B | | | | 48 | 4 | B | |
| | 5 | 12 | 15 | 38 | 4 | B | 12 | 15 | 523 | 7 | B | | | | 523 | 7 | B | |
| | 6 | 12 | 15 | 9 | 4 | B | 12 | 15 | 474 | 7 | B | | | | 474 | 7 | B | |
| | 7 | 10 | 13 | 6 | 4 | B | 10 | 13 | 12 | 4 | B | | | | 12 | 4 | B | |
| | 8 | 10 | 13 | 8 | 4 | B | 14 | 18 | 114 | 5 | B | | | | 114 | 5 | B | |
| ***Tenth Ave @ 41st St*** | 1 | 12 | 15 | 45 | 4 | B | 12 | 15 | 332 | 6 | B | | | | 332 | 6 | B | |
| | 2 | 14 | 16 | 64 | 4 | B | 14 | 16 | 393 | 6 | B | | | | 393 | 6 | B | |
| | 3 | 8 | 10 | 69 | 5 | B | 8 | 10 | 108 | 5 | B | | | | 108 | 5 | B | |
| | 4 | 12 | 14 | 6 | 4 | B | 12 | 14 | 123 | 5 | B | | | | 123 | 5 | B | |
| | 5 | 13 | 16 | 32 | 4 | B | 13 | 16 | 1511 | 12 | D | | | | 1511 | 12 | D | |
| | 6 | 8 | 10 | 19 | 4 | B | 8 | 10 | 586 | 9 | C | | | | 586 | 9 | C | |
| | 7 | 13 | 17 | 0 | 4 | B | 13 | 17 | 297 | 6 | B | | | | 297 | 6 | B | |
| | 8 | 9 | 12 | 65 | 4 | B | 9 | 12 | 94 | 5 | B | | | | 94 | 5 | B | |
| ***Tenth Ave @ 42nd St*** | 1 | 17 | 20 | 26 | 4 | B | 17 | 20 | 153 | 5 | B | | | | 153 | 5 | B | |
| | 2 | 17 | 22 | 69 | 4 | B | 17 | 22 | 208 | 5 | B | | | | 208 | 5 | B | |
| | 3 | 18 | 21 | 289 | 5 | B | 18 | 21 | 357 | 5 | B | | | | 357 | 5 | B | |
| | 4 | 12 | 20 | 176 | 5 | B | 12 | 20 | 884 | 9 | C | | | | 884 | 9 | C | |
| | 5 | 8 | 16 | 55 | 4 | B | 8 | 16 | 298 | 6 | B | | | | 298 | 6 | B | |
| | 6 | 13 | 16 | 60 | 4 | B | 13 | 16 | 321 | 6 | B | | | | 321 | 6 | B | |
| | 7 | 13 | 15 | 102 | 5 | B | 13 | 15 | 529 | 7 | B | | | | 529 | 7 | B | |
| | 8 | 13 | 15 | 247 | 5 | B | 13 | 15 | 256 | 5 | B | | | | 256 | 5 | B | |
| ***Dyer @ 42nd St*** | 1 | 0 | 0 | 0 | N/A | N/A | 0 | 0 | 0 | N/A | N/A | | | | 0 | N/A | N/A | |
| | 2 | 0 | 0 | 0 | N/A | N/A | 0 | 0 | 0 | N/A | N/A | | | | 0 | N/A | N/A | |
| | 3 | 19 | 21 | 183 | 5 | B | 19 | 21 | 182 | 5 | B | | | | 182 | 5 | B | |
| | 4 | 18 | 20 | 90 | 4 | B | 18 | 20 | 83 | 4 | B | | | | 83 | 4 | B | |
| | 5 | 6 | 6 | 9 | 4 | B | 6 | 6 | 9 | 4 | B | | | | 9 | 4 | B | |
| | 6 | 2 | 4 | 1 | 4 | B | 2 | 4 | 1 | 4 | B | | | | 1 | 4 | B | |
| | 7 | 18 | 20 | 78 | 4 | B | 18 | 20 | 71 | 4 | B | | | | 71 | 4 | B | |
| | 8 | 19 | 21 | 163 | 5 | B | 19 | 21 | 162 | 5 | B | | | | 162 | 5 | B | |

# Appendix S.5.3

**Pedestrian Improvement Analysis - Sidewalks Level of Service**

**2025 Future Conditions (AM)**

| Intersection | Walkway Location | 2025 Future without the Proposed Action | | | | | 2025 Future with the Proposed Action | | | | | | 2025 Future with the Proposed Action (Improvement) | | | | | |
|---|---|---|---|---|---|---|---|---|---|---|---|---|---|---|---|---|---|---|
| | | Effective Walkway width | Actual walkway width | Sidewalk Volumes | Platoon Flow Rate (ped/min/ft) | Platoon Level of Service | Effective Walkway width | Actual walkway width | Sidewalk Volumes | Platoon Flow Rate (ped/min/ft) | Platoon Level of Service | Impact? | Proposed Effective Walkwa | Proposed Actual walkway width | Sidewalk Volumes | Platoon Flow Rate (ped/min/ft) | Platoon Level of Service | Still Impact? |
| ***Ninth Ave @ 30th St*** | 1 | 14 | 16 | 258 | 5 | B | 14 | 16 | 316 | 6 | B | | | | 316 | 6 | B | |
| | 2 | 8 | 15 | 216 | 6 | B | 8 | 15 | 288 | 6 | B | | | | 288 | 6 | B | |
| | 3 | 6 | 13 | 57 | 5 | B | 6 | 13 | 95 | 5 | B | | | | 95 | 5 | B | |
| | 4 | 10 | 13 | 78 | 5 | B | 10 | 13 | 113 | 5 | B | | | | 113 | 5 | B | |
| | 5 | 13 | 16 | 112 | 5 | B | 13 | 16 | 249 | 5 | B | | | | 249 | 5 | B | |
| | 6 | 13 | 16 | 130 | 5 | B | 13 | 16 | 243 | 5 | B | | | | 243 | 5 | B | |
| | 7 | 11 | 14 | 308 | 6 | B | 11 | 14 | 339 | 6 | B | | | | 339 | 6 | B | |
| | 8 | 10 | 12 | 36 | 4 | B | 10 | 12 | 187 | 5 | B | | | | 187 | 5 | B | |
| ***Ninth Ave @ 31st St*** | 1 | 12 | 15 | 200 | 5 | B | 17 | 20 | 513 | 6 | B | | | | 513 | 6 | B | |
| | 2 | 10 | 13 | 106 | 5 | B | 10 | 13 | 345 | 6 | B | | | | 345 | 6 | B | |
| | 3 | 10 | 13 | 278 | 6 | B | 10 | 13 | 344 | 6 | B | | | | 344 | 6 | B | |
| | 4 | 10 | 13 | 236 | 6 | B | 10 | 13 | 291 | 6 | B | | | | 291 | 6 | B | |
| | 5 | 12 | 15 | 215 | 5 | B | 12 | 15 | 335 | 6 | B | | | | 335 | 6 | B | |
| | 6 | 12 | 15 | 68 | 4 | B | 12 | 15 | 174 | 5 | B | | | | 174 | 5 | B | |
| | 7 | 10 | 13 | 89 | 5 | B | 10 | 13 | 207 | 5 | B | | | | 207 | 5 | B | |
| | 8 | 10 | 13 | 127 | 5 | B | 10 | 13 | 612 | 8 | C | | | | 612 | 8 | C | |
| ***Ninth Ave @ 33rd St*** | 1 | 12 | 15 | 219 | 5 | B | 12 | 15 | 636 | 8 | C | | | | 636 | 8 | C | |
| | 2 | 12 | 15 | 199 | 5 | B | 12 | 15 | 447 | 6 | B | | | | 447 | 6 | B | |
| | 3 | 10 | 13 | 289 | 6 | B | 10 | 13 | 504 | 7 | B | | | | 504 | 7 | B | |
| | 4 | 10 | 13 | 766 | 9 | C | 10 | 13 | 1147 | 12 | D | | | | 1147 | 12 | D | |
| | 5 | 12 | 15 | 73 | 4 | B | 12 | 15 | 774 | 8 | C | | | | 774 | 8 | C | |
| | 6 | 12 | 15 | 295 | 6 | B | 17 | 20 | 1107 | 8 | C | | | | 1107 | 8 | C | |
| | 7 | 10 | 13 | 614 | 8 | C | 15 | 18 | 1917 | 13 | D | | | | 1917 | 13 | D | |
| | 8 | 10 | 13 | 121 | 5 | B | 10 | 13 | 764 | 9 | C | | | | 764 | 9 | C | |
| ***Ninth Ave @ 34th St*** | 1 | 11 | 15 | 158 | 5 | B | 11 | 15 | 362 | 6 | B | | | | 362 | 6 | B | |
| | 2 | 12 | 15 | 200 | 5 | B | 12 | 15 | 353 | 6 | B | | | | 353 | 6 | B | |
| | 3 | 19 | 23 | 258 | 5 | B | 19 | 23 | 567 | 6 | B | | | | 567 | 6 | B | |
| | 4 | 19 | 23 | 268 | 5 | B | 19 | 23 | 666 | 6 | B | | | | 666 | 6 | B | |
| | 5 | 12 | 15 | 175 | 5 | B | 12 | 15 | 433 | 6 | B | | | | 433 | 6 | B | |
| | 6 | 12 | 15 | 184 | 5 | B | 12 | 15 | 495 | 7 | B | | | | 495 | 7 | B | |
| | 7 | 16 | 20 | 220 | 5 | B | 16 | 20 | 1092 | 9 | C | | | | 1092 | 9 | C | |
| | 8 | 15 | 20 | 163 | 5 | B | 15 | 20 | 580 | 7 | B | | | | 580 | 7 | B | |
| ***Ninth Ave @ 37th St*** | 1 | 12 | 15 | 287 | 6 | B | 12 | 15 | 417 | 6 | B | | | | 417 | 6 | B | |
| | 2 | 12 | 15 | 185 | 5 | B | 12 | 15 | 331 | 6 | B | | | | 331 | 6 | B | |
| | 3 | 9 | 12 | 94 | 5 | B | 9 | 12 | 219 | 6 | B | | | | 219 | 6 | B | |
| | 4 | 9 | 12 | 52 | 4 | B | 9 | 12 | 166 | 5 | B | | | | 166 | 5 | B | |
| | 5 | 10 | 15 | 208 | 5 | B | 10 | 15 | 382 | 7 | B | | | | 382 | 7 | B | |
| | 6 | 12 | 15 | 262 | 5 | B | 12 | 15 | 410 | 6 | B | | | | 410 | 6 | B | |
| | 7 | 6 | 12 | 30 | 4 | B | 6 | 12 | 191 | 6 | B | | | | 191 | 6 | B | |
| | 8 | 9 | 12 | 35 | 4 | B | 9 | 12 | 262 | 6 | B | | | | 262 | 6 | B | |
| ***Ninth Ave @ 38th St*** | 1 | 10 | 15 | 70 | 4 | B | 10 | 15 | 129 | 5 | B | | | | 129 | 5 | B | |
| | 2 | 8 | 15 | 125 | 5 | B | 8 | 15 | 396 | 7 | B | | | | 396 | 7 | B | |
| | 3 | 8 | 11 | 28 | 4 | B | 8 | 11 | 80 | 5 | B | | | | 80 | 5 | B | |
| | 4 | 8 | 11 | 39 | 4 | B | 8 | 11 | 218 | 6 | B | | | | 218 | 6 | B | |
| | 5 | 10 | 15 | 166 | 5 | B | 10 | 15 | 290 | 6 | B | | | | 290 | 6 | B | |
| | 6 | 12 | 15 | 45 | 4 | B | 12 | 15 | 168 | 5 | B | | | | 168 | 5 | B | |
| | 7 | 8 | 11 | 20 | 4 | B | 8 | 11 | 148 | 5 | B | | | | 148 | 5 | B | |
| | 8 | 8 | 11 | 8 | 4 | B | 8 | 11 | 184 | 6 | B | | | | 184 | 6 | B | |

# Appendix S.5.3

**Pedestrian Improvement Analysis - Sidewalks Level of Service**

**2025 Future Conditions (AM)**

| Intersection | Walkway Location | 2025 Future without the Proposed Action | | | | | 2025 Future with the Proposed Action | | | | | | 2025 Future with the Proposed Action (Improvement) | | | | | |
|---|---|---|---|---|---|---|---|---|---|---|---|---|---|---|---|---|---|---|
| | | Effective Walkway width | Actual walkway width | Sidewalk Volumes | Platoon Flow Rate (ped/min/ft) | Platoon Level of Service | Effective Walkway width | Actual walkway width | Sidewalk Volumes | Platoon Flow Rate (ped/min/ft) | Platoon Level of Service | Impact? | Proposed Effective Walkwa | Proposed Actual walkway width | Sidewalk Volumes | Platoon Flow Rate (ped/min/ft) | Platoon Level of Service | Still Impact? |
| ***Ninth Ave @ 39th St*** | 1 | 8 | 15 | 89 | 5 | B | 8 | 15 | 186 | 6 | B | | | | 186 | 6 | B | |
| | 2 | 11 | 15 | 207 | 5 | B | 11 | 15 | 553 | 7 | B | | | | 553 | 7 | B | |
| | 3 | 9 | 12 | 48 | 4 | B | 9 | 12 | 59 | 4 | B | | | | 59 | 4 | B | |
| | 4 | 9 | 12 | 57 | 4 | B | 9 | 12 | 116 | 5 | B | | | | 116 | 5 | B | |
| | 5 | 10 | 15 | 165 | 5 | B | 10 | 15 | 410 | 7 | B | | | | 410 | 7 | B | |
| | 6 | 12 | 15 | 97 | 5 | B | 12 | 15 | 130 | 5 | B | | | | 130 | 5 | B | |
| | 7 | 9 | 12 | 26 | 4 | B | 9 | 12 | 164 | 5 | B | | | | 164 | 5 | B | |
| | 8 | 9 | 12 | 43 | 4 | B | 9 | 12 | 115 | 5 | B | | | | 115 | 5 | B | |
| ***Ninth Ave @ 42nd St*** | 1 | 13 | 16 | 191 | 5 | B | 13 | 16 | 242 | 5 | B | | | | 242 | 5 | B | |
| | 2 | 8 | 10 | 218 | 6 | B | 8 | 10 | 297 | 6 | B | | | | 297 | 6 | B | |
| | 3 | 8 | 11 | 367 | 7 | B | 8 | 11 | 509 | 8 | C | | | | 509 | 8 | C | |
| | 4 | 12 | 19 | 361 | 6 | B | 12 | 19 | 508 | 7 | B | | | | 508 | 7 | B | |
| | 5 | 8 | 14 | 293 | 7 | B | 8 | 14 | 380 | 7 | B | | | | 380 | 7 | B | |
| | 6 | 8 | 15 | 85 | 5 | B | 8 | 15 | 145 | 5 | B | | | | 145 | 5 | B | |
| | 7 | 13 | 20 | 218 | 5 | B | 13 | 20 | 521 | 7 | B | | | | 521 | 7 | B | |
| | 8 | 18 | 21 | 294 | 5 | B | 18 | 21 | 349 | 5 | B | | | | 349 | 5 | B | |
| ***Eighth Ave @ 30th St*** | 1 | 11 | 14 | 205 | 5 | B | 11 | 14 | 317 | 6 | B | | | | 317 | 6 | B | |
| | 2 | 11 | 15 | 381 | 6 | B | 11 | 15 | 645 | 8 | C | | | | 645 | 8 | C | |
| | 3 | 9 | 13 | 52 | 4 | B | 9 | 13 | 117 | 5 | B | | | | 117 | 5 | B | |
| | 4 | 11 | 14 | 78 | 4 | B | 11 | 14 | 99 | 5 | B | | | | 99 | 5 | B | |
| | 5 | 12 | 15 | 181 | 5 | B | 12 | 15 | 363 | 6 | B | | | | 363 | 6 | B | |
| | 6 | 11 | 14 | 176 | 5 | B | 11 | 14 | 260 | 6 | B | | | | 260 | 6 | B | |
| | 7 | 10 | 14 | 47 | 4 | B | 10 | 14 | 88 | 5 | B | | | | 88 | 5 | B | |
| | 8 | 10 | 13 | 78 | 5 | B | 10 | 13 | 104 | 5 | B | | | | 104 | 5 | B | |
| ***Eighth Ave @ 31st St*** | 1 | 12 | 16 | 210 | 5 | B | 12 | 16 | 271 | 6 | B | | | | 271 | 6 | B | |
| | 2 | 18 | 24 | 145 | 5 | B | 17 | 20 | 358 | 5 | B | | | | 358 | 5 | B | |
| | 3 | 35 | 49 | 463 | 5 | B | 15 | 18 | 672 | 7 | B | | | | 672 | 7 | B | |
| | 4 | 10 | 14 | 42 | 4 | B | 10 | 14 | 105 | 5 | B | | | | 105 | 5 | B | |
| | 5 | 12 | 15 | 144 | 5 | B | 12 | 15 | 422 | 6 | B | | | | 422 | 6 | B | |
| | 6 | 12 | 15 | 127 | 5 | B | 12 | 15 | 258 | 5 | B | | | | 258 | 5 | B | |
| | 7 | 10 | 13 | 133 | 5 | B | 10 | 13 | 210 | 5 | B | | | | 210 | 5 | B | |
| | 8 | 21 | 24 | 374 | 5 | B | 21 | 24 | 428 | 5 | B | | | | 428 | 5 | B | |
| ***Eighth Ave @ 33rd St*** | 1 | 12 | 15 | 855 | 9 | C | 12 | 15 | 986 | 9 | C | | | | 986 | 9 | C | |
| | 2 | 12 | 19 | 350 | 6 | B | 12 | 19 | 763 | 8 | C | | | | 763 | 8 | C | |
| | 3 | 10 | 17 | 494 | 7 | B | 10 | 17 | 628 | 8 | C | | | | 628 | 8 | C | |
| | 4 | 30 | 43 | 635 | 5 | B | 15 | 18 | 946 | 8 | C | | | | 946 | 8 | C | |
| | 5 | 30 | 43 | 381 | 5 | B | 17 | 20 | 782 | 7 | B | | | | 782 | 7 | B | |
| | 6 | 12 | 16 | 349 | 6 | B | 12 | 16 | 415 | 6 | B | | | | 415 | 6 | B | |
| | 7 | 13 | 24 | 739 | 8 | C | 13 | 24 | 921 | 9 | C | | | | 921 | 9 | C | |
| | 8 | 7 | 14 | 595 | 10 | C | 7 | 14 | 829 | 12 | D | | | | 829 | 12 | D | |
| ***Eighth Ave @ 34th St*** | 1 | 11 | 15 | 321 | 6 | B | 11 | 15 | 503 | 7 | B | | | | 503 | 7 | B | |
| | 2 | 11 | 15 | 275 | 6 | B | 11 | 15 | 504 | 7 | B | | | | 504 | 7 | B | |
| | 3 | 19 | 22 | 350 | 5 | B | 19 | 22 | 428 | 6 | B | | | | 428 | 6 | B | |
| | 4 | 19 | 22 | 283 | 5 | B | 19 | 22 | 411 | 5 | B | | | | 411 | 5 | B | |
| | 5 | 12 | 15 | 243 | 5 | B | 12 | 15 | 703 | 8 | C | | | | 703 | 8 | C | |
| | 6 | 11 | 15 | 471 | 7 | B | 11 | 15 | 593 | 8 | C | | | | 593 | 8 | C | |
| | 7 | 12 | 22 | 209 | 5 | B | 12 | 22 | 590 | 7 | B | | | | 590 | 7 | B | |
| | 8 | 18 | 22 | 571 | 6 | B | 18 | 22 | 853 | 7 | B | | | | 853 | 7 | B | |

# Appendix S.5.3

**Pedestrian Improvement Analysis - Sidewalks Level of Service**

**2025 Future Conditions (AM)**

| Intersection | Walkway Location | 2025 Future without the Proposed Action | | | | | 2025 Future with the Proposed Action | | | | | | 2025 Future with the Proposed Action (Improvement) | | | | | |
|---|---|---|---|---|---|---|---|---|---|---|---|---|---|---|---|---|---|---|
| | | Effective Walkway width | Actual walkway width | Sidewalk Volumes | Platoon Flow Rate (ped/min/ft) | Platoon Level of Service | Effective Walkway width | Actual walkway width | Sidewalk Volumes | Platoon Flow Rate (ped/min/ft) | Platoon Level of Service | Impact? | Proposed Effective Walkwa | Proposed Actual walkway width | Sidewalk Volumes | Platoon Flow Rate (ped/min/ft) | Platoon Level of Service | Still Impact? |
| ***Eighth Ave @ 37th St*** | 1 | 8 | 15 | 524 | 8 | C | 8 | 15 | 560 | 9 | C | | | | 560 | 9 | C | |
| | 2 | 12 | 15 | 460 | 7 | B | 12 | 15 | 504 | 7 | B | | | | 504 | 7 | B | |
| | 3 | 9 | 12 | 147 | 5 | B | 9 | 12 | 176 | 5 | B | | | | 176 | 5 | B | |
| | 4 | 6 | 12 | 83 | 5 | B | 6 | 12 | 114 | 5 | B | | | | 114 | 5 | B | |
| | 5 | 9 | 15 | 376 | 7 | B | 9 | 15 | 442 | 7 | B | | | | 442 | 7 | B | |
| | 6 | 9 | 15 | 491 | 8 | C | 9 | 15 | 527 | 8 | C | | | | 527 | 8 | C | |
| | 7 | 5 | 12 | 77 | 5 | B | 5 | 12 | 163 | 6 | B | | | | 163 | 6 | B | |
| | 8 | 10 | 13 | 64 | 4 | B | 10 | 13 | 152 | 5 | B | | | | 152 | 5 | B | |
| ***Eighth Ave @ 38th St*** | 1 | 8 | 15 | 311 | 7 | B | 8 | 15 | 345 | 7 | B | | | | 345 | 7 | B | |
| | 2 | 10 | 15 | 334 | 6 | B | 10 | 15 | 373 | 6 | B | | | | 373 | 6 | B | |
| | 3 | 5 | 12 | 157 | 6 | B | 5 | 12 | 187 | 6 | B | | | | 187 | 6 | B | |
| | 4 | 9 | 12 | 67 | 4 | B | 9 | 12 | 101 | 5 | B | | | | 101 | 5 | B | |
| | 5 | 8 | 15 | 183 | 6 | B | 8 | 15 | 194 | 6 | B | | | | 194 | 6 | B | |
| | 6 | 10 | 15 | 354 | 6 | B | 10 | 15 | 357 | 6 | B | | | | 357 | 6 | B | |
| | 7 | 8 | 11 | 48 | 4 | B | 8 | 11 | 179 | 5 | B | | | | 179 | 5 | B | |
| | 8 | 8 | 11 | 91 | 5 | B | 8 | 11 | 123 | 5 | B | | | | 123 | 5 | B | |
| ***Eighth Ave @ 39th St*** | 1 | 12 | 15 | 697 | 8 | C | 12 | 15 | 653 | 8 | C | | | | 653 | 8 | C | |
| | 2 | 11 | 15 | 1452 | 13 | D | 11 | 15 | 1498 | 13 | D | | | | 1498 | 13 | D | |
| | 3 | 8 | 12 | 305 | 7 | B | 8 | 12 | 300 | 7 | B | | | | 300 | 7 | B | |
| | 4 | 9 | 12 | 189 | 5 | B | 9 | 12 | 220 | 6 | B | | | | 220 | 6 | B | |
| | 5 | 12 | 15 | 605 | 7 | B | 12 | 15 | 637 | 8 | C | | | | 637 | 8 | C | |
| | 6 | 12 | 15 | 848 | 9 | C | 12 | 15 | 874 | 9 | C | | | | 874 | 9 | C | |
| | 7 | 9 | 12 | 153 | 5 | B | 9 | 12 | 211 | 6 | B | | | | 211 | 6 | B | |
| | 8 | 9 | 12 | 132 | 5 | B | 9 | 12 | 124 | 5 | B | | | | 124 | 5 | B | |
| ***Eighth Ave @ 42nd St*** | 1 | 7 | 15 | 818 | 12 | D | 7 | 15 | 798 | 12 | D | | | | 798 | 12 | D | |
| | 2 | 16 | 16 | 640 | 7 | B | 16 | 16 | 643 | 7 | B | | | | 643 | 7 | B | |
| | 3 | 15 | 23 | 448 | 6 | B | 15 | 23 | 511 | 6 | B | | | | 511 | 6 | B | |
| | 4 | 14 | 16 | 1376 | 11 | D | 14 | 16 | 1414 | 11 | D | | | | 1414 | 11 | D | |
| | 5 | 7 | 12 | 740 | 11 | D | 7 | 12 | 739 | 11 | D | | | | 739 | 11 | D | |
| | 6 | 12 | 29 | 899 | 9 | C | 12 | 29 | 909 | 9 | C | | | | 909 | 9 | C | |
| | 7 | 12 | 34 | 485 | 7 | B | 12 | 34 | 639 | 8 | C | | | | 639 | 8 | C | |
| | 8 | 12 | 20 | 767 | 8 | C | 12 | 20 | 898 | 9 | C | | | | 898 | 9 | C | |
| ***Seventh Ave @ 31st St*** | 1 | 19 | 23 | 608 | 6 | B | 19 | 23 | 694 | 6 | B | | | | 694 | 6 | B | |
| | 2 | 19 | 23 | 986 | 7 | B | 19 | 23 | 1010 | 8 | C | | | | 1010 | 8 | C | |
| | 3 | 10 | 13 | 623 | 8 | C | 10 | 13 | 729 | 9 | C | | | | 729 | 9 | C | |
| | 4 | 10 | 13 | 306 | 6 | B | 10 | 13 | 316 | 6 | B | | | | 316 | 6 | B | |
| | 5 | 17 | 20 | 479 | 6 | B | 17 | 20 | 558 | 6 | B | | | | 558 | 6 | B | |
| | 6 | 16 | 20 | 863 | 8 | C | 16 | 20 | 919 | 8 | C | | | | 919 | 8 | C | |
| | 7 | 10 | 13 | 175 | 5 | B | 10 | 13 | 208 | 5 | B | | | | 208 | 5 | B | |
| | 8 | 15 | 18 | 370 | 6 | B | 15 | 18 | 518 | 6 | B | | | | 518 | 6 | B | |
| ***Seventh Ave @ 33rd St*** | 1 | 16 | 20 | 628 | 7 | B | 16 | 20 | 799 | 7 | B | | | | 799 | 7 | B | |
| | 2 | 15 | 20 | 734 | 7 | B | 15 | 20 | 771 | 7 | B | | | | 771 | 7 | B | |
| | 3 | 7 | 13 | 500 | 9 | C | 7 | 13 | 568 | 9 | C | | | | 568 | 9 | C | |
| | 4 | 10 | 13 | 670 | 8 | C | 10 | 13 | 763 | 9 | C | | | | 763 | 9 | C | |
| | 5 | 15 | 20 | 632 | 7 | B | 15 | 20 | 649 | 7 | B | | | | 649 | 7 | B | |
| | 6 | 37 | 40 | 806 | 5 | B | 37 | 40 | 879 | 6 | B | | | | 879 | 6 | B | |
| | 7 | 37 | 40 | 691 | 5 | B | 37 | 40 | 959 | 6 | B | | | | 959 | 6 | B | |
| | 8 | 9 | 15 | 472 | 7 | B | 9 | 15 | 538 | 8 | C | | | | 538 | 8 | C | |

# Appendix S.5.3

**Pedestrian Improvement Analysis - Sidewalks Level of Service**

**2025 Future Conditions (AM)**

| Intersection | Walkway Location | 2025 Future without the Proposed Action | | | | | 2025 Future with the Proposed Action | | | | | | 2025 Future with the Proposed Action (Improvement) | | | | | |
|---|---|---|---|---|---|---|---|---|---|---|---|---|---|---|---|---|---|---|
| | | Effective Walkway width | Actual walkway width | Sidewalk Volumes | Platoon Flow Rate (ped/min/ft) | Platoon Level of Service | Effective Walkway width | Actual walkway width | Sidewalk Volumes | Platoon Flow Rate (ped/min/ft) | Platoon Level of Service | Impact? | Proposed Effective Walkwa | Proposed Actual walkway width | Sidewalk Volumes | Platoon Flow Rate (ped/min/ft) | Platoon Level of Service | Still Impact? |
| ***Seventh Ave @ 34th St*** | 1 | 17 | 20 | 613 | 6 | B | 17 | 20 | 683 | 7 | B | | | | 683 | 7 | B | |
| | 2 | 17 | 20 | 687 | 7 | B | 17 | 20 | 721 | 7 | B | | | | 721 | 7 | B | |
| | 3 | 20 | 23 | 382 | 5 | B | 20 | 23 | 454 | 6 | B | | | | 454 | 6 | B | |
| | 4 | 20 | 23 | 860 | 7 | B | 20 | 23 | 911 | 7 | B | | | | 911 | 7 | B | |
| | 5 | 17 | 20 | 417 | 6 | B | 17 | 20 | 448 | 6 | B | | | | 448 | 6 | B | |
| | 6 | 17 | 20 | 397 | 6 | B | 17 | 20 | 563 | 6 | B | | | | 563 | 6 | B | |
| | 7 | 20 | 23 | 1240 | 8 | C | 20 | 23 | 1357 | 9 | C | | | | 1357 | 9 | C | |
| | 8 | 20 | 23 | 333 | 5 | B | 20 | 23 | 395 | 5 | B | | | | 395 | 5 | B | |
| ***Sixth Ave @ 33rd St*** | 1 | 26 | 34 | 384 | 5 | B | 26 | 34 | 391 | 5 | B | | | | 391 | 5 | B | |
| | 2 | 25 | 28 | 431 | 5 | B | 25 | 28 | 447 | 5 | B | | | | 447 | 5 | B | |
| | 3 | 10 | 13 | 289 | 6 | B | 10 | 13 | 320 | 6 | B | | | | 320 | 6 | B | |
| | 4 | 10 | 13 | 416 | 7 | B | 10 | 13 | 448 | 7 | B | | | | 448 | 7 | B | |
| | 5 | 24 | 27 | 376 | 5 | B | 24 | 27 | 507 | 5 | B | | | | 507 | 5 | B | |
| | 6 | 17 | 24 | 712 | 7 | B | 17 | 24 | 858 | 7 | B | | | | 858 | 7 | B | |
| | 7 | 10 | 13 | 586 | 8 | C | 10 | 13 | 658 | 8 | C | | | | 658 | 8 | C | |
| | 8 | 10 | 13 | 284 | 6 | B | 10 | 13 | 316 | 6 | B | | | | 316 | 6 | B | |
| ***Sixth Ave @ 34th St*** | 1 | 0 | 0 | 0 | N/A | N/A | 0 | 0 | 0 | N/A | N/A | | | | 0 | N/A | N/A | |
| | 2 | 10 | 17 | 905 | 10 | C | 10 | 17 | 928 | 10 | C | | | | 928 | 10 | C | |
| | 3 | 20 | 23 | 528 | 6 | B | 20 | 23 | 544 | 6 | B | | | | 544 | 6 | B | |
| | 4 | 18 | 23 | 537 | 6 | B | 18 | 23 | 553 | 6 | B | | | | 553 | 6 | B | |
| | 5 | 14 | 17 | 787 | 8 | C | 14 | 17 | 803 | 8 | C | | | | 803 | 8 | C | |
| | 6 | 0 | 0 | 0 | N/A | N/A | 0 | 0 | 0 | N/A | N/A | | | | 0 | N/A | N/A | |
| | 7 | 0 | 0 | 0 | N/A | N/A | 0 | 0 | 0 | N/A | N/A | | | | 0 | N/A | N/A | |
| | 8 | 0 | 0 | 0 | N/A | N/A | 0 | 0 | 0 | N/A | N/A | | | | 0 | N/A | N/A | |
| ***Broadway @ 34th St*** | 1 | 25 | 30 | 958 | 7 | B | 25 | 30 | 1017 | 7 | B | | | | 1017 | 7 | B | |
| | 2 | 0 | 0 | 0 | N/A | N/A | 0 | 0 | 0 | N/A | N/A | | | | 0 | N/A | N/A | |
| | 3 | 0 | 0 | 0 | N/A | N/A | 0 | 0 | 0 | N/A | N/A | | | | 0 | N/A | N/A | |
| | 4 | 0 | 0 | 0 | N/A | N/A | 0 | 0 | 0 | N/A | N/A | | | | 0 | N/A | N/A | |
| | 5 | 0 | 0 | 0 | N/A | N/A | 0 | 0 | 0 | N/A | N/A | | | | 0 | N/A | N/A | |
| | 6 | 25 | 30 | 954 | 7 | B | 25 | 30 | 1003 | 7 | B | | | | 1003 | 7 | B | |
| | 7 | 18 | 23 | 745 | 7 | B | 18 | 23 | 762 | 7 | B | | | | 762 | 7 | B | |
| | 8 | 18 | 23 | 598 | 6 | B | 18 | 23 | 657 | 6 | B | | | | 657 | 6 | B | |
| ***Blvd @ 33rd St*** | 1 | 0 | 0 | 0 | N/A | N/A | 15 | 15 | 2288 | 14 | D | | | | 2288 | 14 | D | |
| | 2 | 0 | 0 | 0 | N/A | N/A | 15 | 18 | 338 | 6 | B | | | | 338 | 6 | B | |
| | 3 | 0 | 0 | 0 | N/A | N/A | 15 | 18 | 982 | 8 | C | | | | 982 | 8 | C | |
| | 4 | 0 | 0 | 0 | N/A | N/A | 10 | 13 | 781 | 9 | C | | | | 781 | 9 | C | |
| | 5 | 0 | 0 | 0 | N/A | N/A | 0 | 0 | 0 | N/A | N/A | | | | 0 | N/A | N/A | |
| | 6 | 0 | 0 | 0 | N/A | N/A | 0 | 0 | 0 | N/A | N/A | | | | 0 | N/A | N/A | |
| | 7 | 0 | 0 | 0 | N/A | N/A | 10 | 13 | 262 | 6 | B | | | | 262 | 6 | B | |
| | 8 | 0 | 0 | 0 | N/A | N/A | 15 | 18 | 247 | 5 | B | | | | 247 | 5 | B | |
| ***Blvd @ 34th St*** | 1 | 0 | 0 | 0 | N/A | N/A | 15 | 18 | 1113 | 9 | C | | | | 1113 | 9 | C | |
| | 2 | 0 | 0 | 0 | N/A | N/A | 15 | 18 | 613 | 7 | B | | | | 613 | 7 | B | |
| | 3 | 0 | 0 | 0 | N/A | N/A | 26 | 30 | 618 | 6 | B | | | | 618 | 6 | B | |
| | 4 | 0 | 0 | 0 | N/A | N/A | 26 | 30 | 375 | 5 | B | | | | 375 | 5 | B | |
| | 5 | 0 | 0 | 0 | N/A | N/A | 15 | 18 | 798 | 8 | C | | | | 798 | 8 | C | |
| | 6 | 0 | 0 | 0 | N/A | N/A | 15 | 18 | 457 | 6 | B | | | | 457 | 6 | B | |
| | 7 | 0 | 0 | 0 | N/A | N/A | 26 | 30 | 473 | 5 | B | | | | 473 | 5 | B | |
| | 8 | 0 | 0 | 0 | N/A | N/A | 26 | 30 | 282 | 5 | B | | | | 282 | 5 | B | |

# Appendix S.5.3

**Pedestrian Improvement Analysis - Sidewalks Level of Service**

**2025 Future Conditions (AM)**

| Intersection | Walkway Location | 2025 Future without the Proposed Action | | | | | 2025 Future with the Proposed Action | | | | | | 2025 Future with the Proposed Action (Improvement) | | | | | |
|---|---|---|---|---|---|---|---|---|---|---|---|---|---|---|---|---|---|---|
| | | Effective Walkway width | Actual walkway width | Sidewalk Volumes | Platoon Flow Rate (ped/min/ft) | Platoon Level of Service | Effective Walkway width | Actual walkway width | Sidewalk Volumes | Platoon Flow Rate (ped/min/ft) | Platoon Level of Service | Impact? | Proposed Effective Walkwa | Proposed Actual walkway width | Sidewalk Volumes | Platoon Flow Rate (ped/min/ft) | Platoon Level of Service | Still Impact? |
| ***N.Blvd @ 35th St*** | 1 | 0 | 0 | 0 | N/A | N/A | 0 | 0 | 0 | N/A | N/A | | | | 0 | N/A | N/A | |
| | 2 | 0 | 0 | 0 | N/A | N/A | 15 | 18 | 582 | 7 | B | | | | 582 | 7 | B | |
| | 3 | 0 | 0 | 0 | N/A | N/A | 20 | 24 | 490 | 6 | B | | | | 490 | 6 | B | |
| | 4 | 0 | 0 | 0 | N/A | N/A | 15 | 18 | 290 | 5 | B | | | | 290 | 5 | B | |
| | 5 | 0 | 0 | 0 | N/A | N/A | 15 | 18 | 782 | 7 | B | | | | 782 | 7 | B | |
| | 6 | 0 | 0 | 0 | N/A | N/A | 15 | 18 | 1398 | 10 | C | | | | 1398 | 10 | C | |
| | 7 | 0 | 0 | 0 | N/A | N/A | 15 | 18 | 92 | 4 | B | | | | 92 | 4 | B | |
| | 8 | 0 | 0 | 0 | N/A | N/A | 0 | 0 | 0 | N/A | N/A | | | | 0 | N/A | N/A | |
| ***N.Blvd @ 36th St*** | 1 | 0 | 0 | 0 | N/A | N/A | 0 | 0 | 0 | N/A | N/A | | | | 0 | N/A | N/A | |
| | 2 | 0 | 0 | 0 | N/A | N/A | 15 | 18 | 337 | 5 | B | | | | 337 | 5 | B | |
| | 3 | 0 | 0 | 0 | N/A | N/A | 18 | 22 | 120 | 4 | B | | | | 120 | 4 | B | |
| | 4 | 0 | 0 | 0 | N/A | N/A | 15 | 18 | 137 | 5 | B | | | | 137 | 5 | B | |
| | 5 | 0 | 0 | 0 | N/A | N/A | 15 | 18 | 573 | 7 | B | | | | 573 | 7 | B | |
| | 6 | 0 | 0 | 0 | N/A | N/A | 0 | 0 | 0 | N/A | N/A | | | | 0 | N/A | N/A | |
| | 7 | 0 | 0 | 0 | N/A | N/A | 0 | 0 | 0 | N/A | N/A | | | | 0 | N/A | N/A | |
| | 8 | 0 | 0 | 0 | N/A | N/A | 0 | 0 | 0 | N/A | N/A | | | | 0 | N/A | N/A | |
| ***N.Blvd @ 37th St*** | 1 | 0 | 0 | 0 | N/A | N/A | 0 | 0 | 0 | N/A | N/A | | | | 0 | N/A | N/A | |
| | 2 | 0 | 0 | 0 | N/A | N/A | 15 | 18 | 335 | 5 | B | | | | 335 | 5 | B | |
| | 3 | 0 | 0 | 0 | N/A | N/A | 18 | 22 | 198 | 5 | B | | | | 198 | 5 | B | |
| | 4 | 0 | 0 | 0 | N/A | N/A | 14 | 17 | 91 | 4 | B | | | | 91 | 4 | B | |
| | 5 | 0 | 0 | 0 | N/A | N/A | 15 | 18 | 366 | 6 | B | | | | 366 | 6 | B | |
| | 6 | 0 | 0 | 0 | N/A | N/A | 0 | 0 | 0 | N/A | N/A | | | | 0 | N/A | N/A | |
| | 7 | 0 | 0 | 0 | N/A | N/A | 0 | 0 | 0 | N/A | N/A | | | | 0 | N/A | N/A | |
| | 8 | 0 | 0 | 0 | N/A | N/A | 0 | 0 | 0 | N/A | N/A | | | | 0 | N/A | N/A | |
| ***Blvd @ 38th St*** | 1 | 0 | 0 | 0 | N/A | N/A | 15 | 18 | 936 | 8 | C | | | | 936 | 8 | C | |
| | 2 | 0 | 0 | 0 | N/A | N/A | 15 | 18 | 311 | 5 | B | | | | 311 | 5 | B | |
| | 3 | 0 | 0 | 0 | N/A | N/A | 18 | 22 | 184 | 5 | B | | | | 184 | 5 | B | |
| | 4 | 0 | 0 | 0 | N/A | N/A | 14 | 17 | 169 | 5 | B | | | | 169 | 5 | B | |
| | 5 | 0 | 0 | 0 | N/A | N/A | 15 | 18 | 358 | 6 | B | | | | 358 | 6 | B | |
| | 6 | 0 | 0 | 0 | N/A | N/A | 15 | 18 | 1122 | 9 | C | | | | 1122 | 9 | C | |
| | 7 | 0 | 0 | 0 | N/A | N/A | 14 | 17 | 91 | 4 | B | | | | 91 | 4 | B | |
| | 8 | 0 | 0 | 0 | N/A | N/A | 18 | 22 | 142 | 5 | B | | | | 142 | 5 | B | |
| ***S.Blvd @ 35th St*** | 1 | 0 | 0 | 0 | N/A | N/A | 15 | 18 | 717 | 7 | B | | | | 717 | 7 | B | |
| | 2 | 0 | 0 | 0 | N/A | N/A | 0 | 0 | 0 | N/A | N/A | | | | 0 | N/A | N/A | |
| | 3 | 0 | 0 | 0 | N/A | N/A | 0 | 0 | 0 | N/A | N/A | | | | 0 | N/A | N/A | |
| | 4 | 0 | 0 | 0 | N/A | N/A | 0 | 0 | 0 | N/A | N/A | | | | 0 | N/A | N/A | |
| | 5 | 0 | 0 | 0 | N/A | N/A | 0 | 0 | 0 | N/A | N/A | | | | 0 | N/A | N/A | |
| | 6 | 0 | 0 | 0 | N/A | N/A | 0 | 0 | 0 | N/A | N/A | | | | 0 | N/A | N/A | |
| | 7 | 0 | 0 | 0 | N/A | N/A | 15 | 18 | 92 | 4 | B | | | | 92 | 4 | B | |
| | 8 | 0 | 0 | 0 | N/A | N/A | 20 | 24 | 422 | 5 | B | | | | 422 | 5 | B | |
| ***S.Blvd @ 36th St*** | 1 | 0 | 0 | 0 | N/A | N/A | 15 | 18 | 376 | 6 | B | | | | 376 | 6 | B | |
| | 2 | 0 | 0 | 0 | N/A | N/A | 0 | 0 | 0 | N/A | N/A | | | | 0 | N/A | N/A | |
| | 3 | 0 | 0 | 0 | N/A | N/A | 0 | 0 | 0 | N/A | N/A | | | | 0 | N/A | N/A | |
| | 4 | 0 | 0 | 0 | N/A | N/A | 0 | 0 | 0 | N/A | N/A | | | | 0 | N/A | N/A | |
| | 5 | 0 | 0 | 0 | N/A | N/A | 0 | 0 | 0 | N/A | N/A | | | | 0 | N/A | N/A | |
| | 6 | 0 | 0 | 0 | N/A | N/A | 15 | 18 | 491 | 6 | B | | | | 491 | 6 | B | |
| | 7 | 0 | 0 | 0 | N/A | N/A | 15 | 18 | 366 | 6 | B | | | | 366 | 6 | B | |
| | 8 | 0 | 0 | 0 | N/A | N/A | 18 | 22 | 123 | 4 | B | | | | 123 | 4 | B | |

# Appendix S.5.3

**Pedestrian Improvement Analysis - Sidewalks Level of Service**

**2025 Future Conditions (AM)**

| Intersection | Walkway Location | 2025 Future without the Proposed Action | | | | | 2025 Future with the Proposed Action | | | | | | 2025 Future with the Proposed Action (Improvement) | | | | | |
|---|---|---|---|---|---|---|---|---|---|---|---|---|---|---|---|---|---|---|
| | | Effective Walkway width | Actual walkway width | Sidewalk Volumes | Platoon Flow Rate (ped/min/ft) | Platoon Level of Service | Effective Walkway width | Actual walkway width | Sidewalk Volumes | Platoon Flow Rate (ped/min/ft) | Platoon Level of Service | Impact? | Proposed Effective Walkwa | Proposed Actual walkway width | Sidewalk Volumes | Platoon Flow Rate (ped/min/ft) | Platoon Level of Service | Still Impact? |
| ***S.Blvd @ 37th St*** | 1 | 0 | 0 | 0 | N/A | N/A | 15 | 18 | 685 | 7 | B | | | | 685 | 7 | B | |
| | 2 | 0 | 0 | 0 | N/A | N/A | 0 | 0 | 0 | N/A | N/A | | | | 0 | N/A | N/A | |
| | 3 | 0 | 0 | 0 | N/A | N/A | 0 | 0 | 0 | N/A | N/A | | | | 0 | N/A | N/A | |
| | 4 | 0 | 0 | 0 | N/A | N/A | 0 | 0 | 0 | N/A | N/A | | | | 0 | N/A | N/A | |
| | 5 | 0 | 0 | 0 | N/A | N/A | 0 | 0 | 0 | N/A | N/A | | | | 0 | N/A | N/A | |
| | 6 | 0 | 0 | 0 | N/A | N/A | 15 | 18 | 785 | 7 | B | | | | 785 | 7 | B | |
| | 7 | 0 | 0 | 0 | N/A | N/A | 14 | 17 | 52 | 4 | B | | | | 52 | 4 | B | |
| | 8 | 0 | 0 | 0 | N/A | N/A | 18 | 22 | 146 | 5 | B | | | | 146 | 5 | B | |

# Appendix S.5.3

**Pedestrian Improvement Analysis - Sidewalks Level of Service**

**2025 Future Conditions (MD)**

| Intersection | Walkway Location | 2025 Future without the Proposed Action | | | | | 2025 Future with the Proposed Action | | | | | | 2025 Future with the Proposed Action (Improvement) | | | | | |
|---|---|---|---|---|---|---|---|---|---|---|---|---|---|---|---|---|---|---|
| | | Effective Walkway width | Actual walkway width | Sidewalk Volumes | Platoon Flow Rate (ped/min/ft) | Platoon Level of Service | Effective Walkway width | Actual walkway width | Sidewalk Volumes | Platoon Flow Rate (ped/min/ft) | Platoon Level of Service | Impact? | Proposed Effective Walkwa | Proposed Actual walkway width | Sidewalk Volumes | Platoon Flow Rate (ped/min/ft) | Platoon Level of Service | Still Impact? |
| ***Twelfth Ave @ 30th St*** | 1 | 13 | 15 | 0 | 4 | B | 13 | 15 | 0 | 4 | B | | | | 0 | 4 | B | |
| | 2 | 9 | 11 | 2 | 4 | B | 9 | 11 | 2 | 4 | B | | | | 2 | 4 | B | |
| | 3 | 10 | 13 | 0 | 4 | B | 10 | 13 | 0 | 4 | B | | | | 0 | 4 | B | |
| | 4 | 10 | 13 | 1 | 4 | B | 10 | 13 | 1 | 4 | B | | | | 1 | 4 | B | |
| | 5 | 12 | 15 | 2 | 4 | B | 12 | 15 | 2 | 4 | B | | | | 2 | 4 | B | |
| | 6 | 13 | 15 | 0 | 4 | B | 13 | 15 | 0 | 4 | B | | | | 0 | 4 | B | |
| | 7 | 0 | 0 | 0 | N/A | N/A | 0 | 0 | 0 | N/A | N/A | | | | 0 | N/A | N/A | |
| | 8 | 0 | 0 | 0 | N/A | N/A | 0 | 0 | 0 | N/A | N/A | | | | 0 | N/A | N/A | |
| ***Twelfth Ave @ 34th St*** | 1 | 13 | 15 | 0 | 4 | B | 13 | 15 | 0 | 4 | B | | | | 0 | 4 | B | |
| | 2 | 9 | 12 | 3 | 4 | B | 9 | 12 | 6 | 4 | B | | | | 6 | 4 | B | |
| | 3 | 15 | 18 | 27 | 4 | B | 15 | 18 | 29 | 4 | B | | | | 29 | 4 | B | |
| | 4 | 15 | 18 | 104 | 4 | B | 15 | 18 | 109 | 4 | B | | | | 109 | 4 | B | |
| | 5 | 9 | 12 | 2 | 4 | B | 9 | 12 | 2 | 4 | B | | | | 2 | 4 | B | |
| | 6 | 13 | 15 | 0 | 4 | B | 13 | 15 | 0 | 4 | B | | | | 0 | 4 | B | |
| | 7 | 0 | 0 | 0 | N/A | N/A | 0 | 0 | 0 | N/A | N/A | | | | 0 | N/A | N/A | |
| | 8 | 0 | 0 | 0 | N/A | N/A | 0 | 0 | 0 | N/A | N/A | | | | 0 | N/A | N/A | |
| ***Twelfth Ave @ 39th St*** | 1 | 13 | 15 | 0 | 4 | B | 13 | 15 | 0 | 4 | B | | | | 0 | 4 | B | |
| | 2 | 10 | 13 | 12 | 4 | B | 10 | 13 | 12 | 4 | B | | | | 12 | 4 | B | |
| | 3 | 10 | 13 | 0 | 4 | B | 0 | 0 | 0 | N/A | N/A | | | | 0 | N/A | N/A | |
| | 4 | 10 | 13 | 86 | 5 | B | 0 | 0 | 0 | N/A | N/A | | | | 0 | N/A | N/A | |
| | 5 | 15 | 18 | 14 | 4 | B | 15 | 18 | 17 | 4 | B | | | | 17 | 4 | B | |
| | 6 | 13 | 15 | 0 | 4 | B | 13 | 15 | 0 | 4 | B | | | | 0 | 4 | B | |
| | 7 | 0 | 0 | 0 | N/A | N/A | 0 | 0 | 0 | N/A | N/A | | | | 0 | N/A | N/A | |
| | 8 | 0 | 0 | 0 | N/A | N/A | 0 | 0 | 0 | N/A | N/A | | | | 0 | N/A | N/A | |
| ***Twelfth Ave @ 40th St*** | 1 | 13 | 15 | 0 | 4 | B | 13 | 15 | 0 | 4 | B | | | | 0 | 4 | B | |
| | 2 | 10 | 13 | 3 | 4 | B | 10 | 13 | 3 | 4 | B | | | | 3 | 4 | B | |
| | 3 | 9 | 11 | 2 | 4 | B | 0 | 0 | 0 | N/A | N/A | | | | 0 | N/A | N/A | |
| | 4 | 9 | 12 | 1 | 4 | B | 0 | 0 | 0 | N/A | N/A | | | | 0 | N/A | N/A | |
| | 5 | 11 | 14 | 2 | 4 | B | 11 | 14 | 2 | 4 | B | | | | 2 | 4 | B | |
| | 6 | 13 | 15 | 0 | 4 | B | 13 | 15 | 0 | 4 | B | | | | 0 | 4 | B | |
| | 7 | 0 | 0 | 0 | N/A | N/A | 0 | 0 | 0 | N/A | N/A | | | | 0 | N/A | N/A | |
| | 8 | 0 | 0 | 0 | N/A | N/A | 0 | 0 | 0 | N/A | N/A | | | | 0 | N/A | N/A | |
| ***Twelfth Ave @ 42nd St*** | 1 | 13 | 15 | 0 | 4 | B | 13 | 15 | 0 | 4 | B | | | | 0 | 4 | B | |
| | 2 | 17 | 20 | 26 | 4 | B | 17 | 20 | 18 | 4 | B | | | | 18 | 4 | B | |
| | 3 | 12 | 15 | 126 | 5 | B | 12 | 15 | 103 | 5 | B | | | | 103 | 5 | B | |
| | 4 | 23 | 26 | 109 | 4 | B | 23 | 26 | 113 | 4 | B | | | | 113 | 4 | B | |
| | 5 | 17 | 20 | 9 | 4 | B | 17 | 20 | 9 | 4 | B | | | | 9 | 4 | B | |
| | 6 | 13 | 15 | 0 | 4 | B | 13 | 15 | 0 | 4 | B | | | | 0 | 4 | B | |
| | 7 | 0 | 0 | 0 | N/A | N/A | 0 | 0 | 0 | N/A | N/A | | | | 0 | N/A | N/A | |
| | 8 | 0 | 0 | 0 | N/A | N/A | 0 | 0 | 0 | N/A | N/A | | | | 0 | N/A | N/A | |
| ***Eleventh Ave @ 29th St*** | 1 | 12 | 15 | 42 | 4 | B | 12 | 15 | 323 | 6 | B | | | | 323 | 6 | B | |
| | 2 | 12 | 15 | 121 | 5 | B | 12 | 15 | 521 | 7 | B | | | | 521 | 7 | B | |
| | 3 | 10 | 13 | 17 | 4 | B | 10 | 13 | 78 | 5 | B | | | | 78 | 5 | B | |
| | 4 | 10 | 13 | 15 | 4 | B | 10 | 13 | 53 | 4 | B | | | | 53 | 4 | B | |
| | 5 | 12 | 15 | 118 | 5 | B | 12 | 15 | 435 | 6 | B | | | | 435 | 6 | B | |
| | 6 | 12 | 15 | 44 | 4 | B | 12 | 15 | 311 | 6 | B | | | | 311 | 6 | B | |
| | 7 | 10 | 13 | 0 | 4 | B | 10 | 13 | 0 | 4 | B | | | | 0 | 4 | B | |
| | 8 | 10 | 13 | 3 | 4 | B | 10 | 13 | 3 | 4 | B | | | | 3 | 4 | B | |

# Appendix S.5.3

**Pedestrian Improvement Analysis - Sidewalks Level of Service**

**2025 Future Conditions (MD)**

| Intersection | Walkway Location | 2025 Future without the Proposed Action | | | | | 2025 Future with the Proposed Action | | | | | | 2025 Future with the Proposed Action (Improvement) | | | | | |
|---|---|---|---|---|---|---|---|---|---|---|---|---|---|---|---|---|---|---|
| | | Effective Walkway width | Actual walkway width | Sidewalk Volumes | Platoon Flow Rate (ped/min/ft) | Platoon Level of Service | Effective Walkway width | Actual walkway width | Sidewalk Volumes | Platoon Flow Rate (ped/min/ft) | Platoon Level of Service | Impact? | Proposed Effective Walkwa | Proposed Actual walkway width | Sidewalk Volumes | Platoon Flow Rate (ped/min/ft) | Platoon Level of Service | Still Impact? |
| ***Eleventh Ave @ 30th St*** | 1 | 12 | 15 | 36 | 4 | B | 12 | 15 | 215 | 5 | B | | | | 215 | 5 | B | |
| | 2 | 12 | 15 | 105 | 5 | B | 17 | 20 | 700 | 7 | B | | | | 700 | 7 | B | |
| | 3 | 10 | 13 | 167 | 5 | B | 10 | 13 | 444 | 7 | B | | | | 444 | 7 | B | |
| | 4 | 10 | 13 | 10 | 4 | B | 10 | 13 | 68 | 4 | B | | | | 68 | 4 | B | |
| | 5 | 12 | 15 | 156 | 5 | B | 12 | 15 | 669 | 8 | C | | | | 669 | 8 | C | |
| | 6 | 12 | 15 | 64 | 4 | B | 12 | 15 | 457 | 7 | B | | | | 457 | 7 | B | |
| | 7 | 10 | 13 | 5 | 4 | B | 10 | 13 | 5 | 4 | B | | | | 5 | 4 | B | |
| | 8 | 10 | 13 | 17 | 4 | B | 10 | 13 | 30 | 4 | B | | | | 30 | 4 | B | |
| ***Eleventh Ave @ 33rd St*** | 1 | 12 | 15 | 11 | 4 | B | 12 | 15 | 242 | 5 | B | | | | 242 | 5 | B | |
| | 2 | 12 | 15 | 238 | 5 | B | 17 | 20 | 685 | 7 | B | | | | 685 | 7 | B | |
| | 3 | 10 | 13 | 188 | 5 | B | 15 | 18 | 389 | 6 | B | | | | 389 | 6 | B | |
| | 4 | 10 | 13 | 2 | 4 | B | 10 | 13 | 454 | 7 | B | | | | 454 | 7 | B | |
| | 5 | 12 | 15 | 55 | 4 | B | 17 | 20 | 679 | 7 | B | | | | 679 | 7 | B | |
| | 6 | 12 | 15 | 9 | 4 | B | 12 | 15 | 175 | 5 | B | | | | 175 | 5 | B | |
| | 7 | 10 | 13 | 0 | 4 | B | 0 | 0 | 0 | N/A | N/A | | | | 0 | N/A | N/A | |
| | 8 | 10 | 13 | 2 | 4 | B | 0 | 0 | 0 | N/A | N/A | | | | 0 | N/A | N/A | |
| ***Eleventh Ave @ 34th St*** | 1 | 13 | 15 | 11 | 4 | B | 13 | 15 | 303 | 6 | B | | | | 303 | 6 | B | |
| | 2 | 9 | 12 | 190 | 5 | B | 14 | 17 | 796 | 8 | C | | | | 796 | 8 | C | |
| | 3 | 17 | 20 | 132 | 5 | B | 26 | 30 | 529 | 5 | B | | | | 529 | 5 | B | |
| | 4 | 17 | 20 | 76 | 4 | B | 26 | 30 | 297 | 5 | B | | | | 297 | 5 | B | |
| | 5 | 12 | 15 | 204 | 5 | B | 17 | 20 | 745 | 7 | B | | | | 745 | 7 | B | |
| | 6 | 12 | 15 | 15 | 4 | B | 12 | 15 | 344 | 6 | B | | | | 344 | 6 | B | |
| | 7 | 17 | 20 | 122 | 4 | B | 17 | 20 | 127 | 4 | B | | | | 127 | 4 | B | |
| | 8 | 17 | 20 | 46 | 4 | B | 17 | 20 | 48 | 4 | B | | | | 48 | 4 | B | |
| ***Eleventh Ave @ 35th St*** | 1 | 16 | 19 | 15 | 4 | B | 16 | 19 | 217 | 5 | B | | | | 217 | 5 | B | |
| | 2 | 14 | 15 | 158 | 5 | B | 14 | 15 | 769 | 8 | C | | | | 769 | 8 | C | |
| | 3 | 12 | 14 | 1 | 4 | B | 20 | 24 | 266 | 5 | B | | | | 266 | 5 | B | |
| | 4 | 12 | 14 | 10 | 4 | B | 17 | 19 | 175 | 5 | B | | | | 175 | 5 | B | |
| | 5 | 8 | 11 | 158 | 5 | B | 13 | 16 | 760 | 8 | C | | | | 760 | 8 | C | |
| | 6 | 12 | 15 | 12 | 4 | B | 12 | 15 | 304 | 6 | B | | | | 304 | 6 | B | |
| | 7 | 0 | 0 | 0 | N/A | N/A | 0 | 0 | 0 | N/A | N/A | | | | 0 | N/A | N/A | |
| | 8 | 0 | 0 | 0 | N/A | N/A | 0 | 0 | 0 | N/A | N/A | | | | 0 | N/A | N/A | |
| ***Eleventh Ave @ 36th St*** | 1 | 12 | 15 | 12 | 4 | B | 12 | 15 | 186 | 5 | B | | | | 186 | 5 | B | |
| | 2 | 7 | 9 | 143 | 5 | B | 12 | 15 | 737 | 8 | C | | | | 737 | 8 | C | |
| | 3 | 10 | 13 | 2 | 4 | B | 18 | 22 | 91 | 4 | B | | | | 91 | 4 | B | |
| | 4 | 8 | 10 | 4 | 4 | B | 15 | 18 | 173 | 5 | B | | | | 173 | 5 | B | |
| | 5 | 12 | 15 | 140 | 5 | B | 18 | 20 | 972 | 8 | C | | | | 972 | 8 | C | |
| | 6 | 13 | 17 | 11 | 4 | B | 13 | 17 | 213 | 5 | B | | | | 213 | 5 | B | |
| | 7 | 0 | 0 | 0 | N/A | N/A | 0 | 0 | 0 | N/A | N/A | | | | 0 | N/A | N/A | |
| | 8 | 0 | 0 | 0 | N/A | N/A | 0 | 0 | 0 | N/A | N/A | | | | 0 | N/A | N/A | |
| ***Eleventh Ave @ 37th St*** | 1 | 12 | 15 | 0 | 4 | B | 12 | 15 | 140 | 5 | B | | | | 140 | 5 | B | |
| | 2 | 7 | 10 | 135 | 5 | B | 12 | 15 | 643 | 8 | C | | | | 643 | 8 | C | |
| | 3 | 9 | 12 | 9 | 4 | B | 18 | 22 | 254 | 5 | B | | | | 254 | 5 | B | |
| | 4 | 9 | 12 | 6 | 4 | B | 14 | 17 | 56 | 4 | B | | | | 56 | 4 | B | |
| | 5 | 7 | 10 | 116 | 5 | B | 12 | 15 | 645 | 8 | C | | | | 645 | 8 | C | |
| | 6 | 12 | 15 | 7 | 4 | B | 12 | 15 | 181 | 5 | B | | | | 181 | 5 | B | |
| | 7 | 0 | 0 | 0 | N/A | N/A | 0 | 0 | 0 | N/A | N/A | | | | 0 | N/A | N/A | |
| | 8 | 0 | 0 | 0 | N/A | N/A | 0 | 0 | 0 | N/A | N/A | | | | 0 | N/A | N/A | |

# Appendix S.5.3

**Pedestrian Improvement Analysis - Sidewalks Level of Service**

**2025 Future Conditions (MD)**

| Intersection | Walkway Location | 2025 Future without the Proposed Action | | | | | 2025 Future with the Proposed Action | | | | | | 2025 Future with the Proposed Action (Improvement) | | | | | |
|---|---|---|---|---|---|---|---|---|---|---|---|---|---|---|---|---|---|---|
| | | Effective Walkway width | Actual walkway width | Sidewalk Volumes | Platoon Flow Rate (ped/min/ft) | Platoon Level of Service | Effective Walkway width | Actual walkway width | Sidewalk Volumes | Platoon Flow Rate (ped/min/ft) | Platoon Level of Service | Impact? | Proposed Effective Walkwa | Proposed Actual walkway width | Sidewalk Volumes | Platoon Flow Rate (ped/min/ft) | Platoon Level of Service | Still Impact? |
| ***Eleventh Ave @ 38th St*** | 1 | 12 | 15 | 1 | 4 | B | 12 | 15 | 183 | 5 | B | | | | 183 | 5 | B | |
| | 2 | 7 | 10 | 8 | 4 | B | 12 | 15 | 396 | 6 | B | | | | 396 | 6 | B | |
| | 3 | 8 | 11 | 1 | 4 | B | 18 | 22 | 269 | 5 | B | | | | 269 | 5 | B | |
| | 4 | 8 | 11 | 6 | 4 | B | 14 | 17 | 92 | 4 | B | | | | 92 | 4 | B | |
| | 5 | 7 | 10 | 96 | 5 | B | 12 | 15 | 492 | 7 | B | | | | 492 | 7 | B | |
| | 6 | 12 | 15 | 0 | 4 | B | 12 | 15 | 140 | 5 | B | | | | 140 | 5 | B | |
| | 7 | 0 | 0 | 0 | N/A | N/A | 0 | 0 | 0 | N/A | N/A | | | | 0 | N/A | N/A | |
| | 8 | 0 | 0 | 0 | N/A | N/A | 0 | 0 | 0 | N/A | N/A | | | | 0 | N/A | N/A | |
| ***Eleventh Ave @ 39th St*** | 1 | 11 | 14 | 9 | 4 | B | 11 | 14 | 230 | 5 | B | | | | 230 | 5 | B | |
| | 2 | 7 | 10 | 0 | 4 | B | 12 | 15 | 319 | 6 | B | | | | 319 | 6 | B | |
| | 3 | 9 | 12 | 22 | 4 | B | 9 | 12 | 39 | 4 | B | | | | 39 | 4 | B | |
| | 4 | 8 | 11 | 61 | 5 | B | 15 | 18 | 107 | 4 | B | | | | 107 | 4 | B | |
| | 5 | 7 | 10 | 6 | 4 | B | 12 | 15 | 323 | 6 | B | | | | 323 | 6 | B | |
| | 6 | 12 | 15 | 8 | 4 | B | 12 | 15 | 190 | 5 | B | | | | 190 | 5 | B | |
| | 7 | 10 | 13 | 60 | 4 | B | 0 | 0 | 0 | N/A | N/A | | | | 0 | N/A | N/A | |
| | 8 | 12 | 15 | 14 | 4 | B | 0 | 0 | 0 | N/A | N/A | | | | 0 | N/A | N/A | |
| ***Eleventh Ave @ 40th St*** | 1 | 12 | 15 | 3 | 4 | B | 12 | 15 | 227 | 5 | B | | | | 227 | 5 | B | |
| | 2 | 7 | 10 | 3 | 4 | B | 12 | 15 | 242 | 5 | B | | | | 242 | 5 | B | |
| | 3 | 10 | 13 | 5 | 4 | B | 14 | 18 | 163 | 5 | B | | | | 163 | 5 | B | |
| | 4 | 10 | 13 | 1 | 4 | B | 15 | 18 | 1 | 4 | B | | | | 1 | 4 | B | |
| | 5 | 7 | 10 | 5 | 4 | B | 12 | 15 | 296 | 6 | B | | | | 296 | 6 | B | |
| | 6 | 12 | 15 | 31 | 4 | B | 12 | 15 | 252 | 5 | B | | | | 252 | 5 | B | |
| | 7 | 10 | 13 | 8 | 4 | B | 0 | 0 | 0 | N/A | N/A | | | | 0 | N/A | N/A | |
| | 8 | 10 | 13 | 3 | 4 | B | 0 | 0 | 0 | N/A | N/A | | | | 0 | N/A | N/A | |
| ***Eleventh Ave @ 42nd St*** | 1 | 13 | 16 | 24 | 4 | B | 13 | 16 | 125 | 5 | B | | | | 125 | 5 | B | |
| | 2 | 13 | 16 | 7 | 4 | B | 13 | 16 | 207 | 5 | B | | | | 207 | 5 | B | |
| | 3 | 12 | 15 | 225 | 5 | B | 12 | 15 | 181 | 5 | B | | | | 181 | 5 | B | |
| | 4 | 12 | 15 | 146 | 5 | B | 12 | 15 | 519 | 7 | B | | | | 519 | 7 | B | |
| | 5 | 12 | 16 | 19 | 4 | B | 12 | 16 | 282 | 6 | B | | | | 282 | 6 | B | |
| | 6 | 12 | 15 | 74 | 4 | B | 12 | 15 | 175 | 5 | B | | | | 175 | 5 | B | |
| | 7 | 12 | 16 | 128 | 5 | B | 12 | 16 | 134 | 5 | B | | | | 134 | 5 | B | |
| | 8 | 12 | 16 | 207 | 5 | B | 12 | 16 | 28 | 4 | B | | | | 28 | 4 | B | |
| ***Tenth Ave @ 29th St*** | 1 | 12 | 15 | 143 | 5 | B | 12 | 15 | 1063 | 10 | C | | | | 1063 | 10 | C | |
| | 2 | 12 | 15 | 89 | 4 | B | 12 | 15 | 335 | 6 | B | | | | 335 | 6 | B | |
| | 3 | 10 | 13 | 78 | 5 | B | 10 | 13 | 170 | 5 | B | | | | 170 | 5 | B | |
| | 4 | 10 | 13 | 88 | 5 | B | 10 | 13 | 180 | 5 | B | | | | 180 | 5 | B | |
| | 5 | 12 | 15 | 100 | 5 | B | 12 | 15 | 345 | 6 | B | | | | 345 | 6 | B | |
| | 6 | 12 | 15 | 206 | 5 | B | 12 | 15 | 890 | 9 | C | | | | 890 | 9 | C | |
| | 7 | 10 | 13 | 60 | 4 | B | 10 | 13 | 83 | 5 | B | | | | 83 | 5 | B | |
| | 8 | 10 | 13 | 61 | 4 | B | 10 | 13 | 82 | 5 | B | | | | 82 | 5 | B | |
| ***Tenth Ave @ 30th St*** | 1 | 13 | 16 | 174 | 5 | B | 13 | 16 | 1361 | 11 | D | | | | 1361 | 11 | D | |
| | 2 | 12 | 15 | 154 | 5 | B | 12 | 15 | 345 | 6 | B | | | | 345 | 6 | B | |
| | 3 | 10 | 13 | 170 | 5 | B | 10 | 13 | 679 | 9 | C | | | | 679 | 9 | C | |
| | 4 | 12 | 15 | 59 | 4 | B | 12 | 15 | 185 | 5 | B | | | | 185 | 5 | B | |
| | 5 | 12 | 15 | 114 | 5 | B | 12 | 15 | 481 | 7 | B | | | | 481 | 7 | B | |
| | 6 | 12 | 15 | 179 | 5 | B | 12 | 15 | 1223 | 11 | D | | | | 1223 | 11 | D | |
| | 7 | 11 | 14 | 59 | 4 | B | 11 | 14 | 88 | 5 | B | | | | 88 | 5 | B | |
| | 8 | 11 | 14 | 188 | 5 | B | 11 | 14 | 890 | 9 | C | | | | 890 | 9 | C | |

# Appendix S.5.3

**Pedestrian Improvement Analysis - Sidewalks Level of Service**

**2025 Future Conditions (MD)**

| Intersection | Walkway Location | 2025 Future without the Proposed Action | | | | | 2025 Future with the Proposed Action | | | | | | 2025 Future with the Proposed Action (Improvement) | | | | | |
|---|---|---|---|---|---|---|---|---|---|---|---|---|---|---|---|---|---|---|
| | | Effective Walkway width | Actual walkway width | Sidewalk Volumes | Platoon Flow Rate (ped/min/ft) | Platoon Level of Service | Effective Walkway width | Actual walkway width | Sidewalk Volumes | Platoon Flow Rate (ped/min/ft) | Platoon Level of Service | Impact? | Proposed Effective Walkwa | Proposed Actual walkway width | Sidewalk Volumes | Platoon Flow Rate (ped/min/ft) | Platoon Level of Service | Still Impact? |
| ***Tenth Ave @ 31st St*** | 1 | 12 | 15 | 70 | 4 | B | 12 | 15 | 1561 | 13 | D | | | | 1561 | 13 | D | |
| | 2 | 12 | 15 | 105 | 5 | B | 12 | 15 | 457 | 7 | B | | | | 457 | 7 | B | |
| | 3 | 11 | 13 | 249 | 6 | B | 11 | 13 | 486 | 7 | B | | | | 486 | 7 | B | |
| | 4 | 11 | 13 | 21 | 4 | B | 11 | 13 | 250 | 6 | B | | | | 250 | 6 | B | |
| | 5 | 12 | 15 | 160 | 5 | B | 12 | 15 | 466 | 7 | B | | | | 466 | 7 | B | |
| | 6 | 12 | 15 | 179 | 5 | B | 12 | 15 | 1369 | 12 | D | | | | 1369 | 12 | D | |
| | 7 | 0 | 0 | 0 | N/A | N/A | 0 | 0 | 0 | N/A | N/A | | | | 0 | N/A | N/A | |
| | 8 | 0 | 0 | 0 | N/A | N/A | 0 | 0 | 0 | N/A | N/A | | | | 0 | N/A | N/A | |
| ***Tenth Ave @ 33rd St*** | 1 | 12 | 15 | 137 | 5 | B | 12 | 15 | 1514 | 12 | D | | | | 1514 | 12 | D | |
| | 2 | 12 | 15 | 149 | 5 | B | 12 | 15 | 852 | 9 | C | | | | 852 | 9 | C | |
| | 3 | 10 | 13 | 213 | 5 | B | 10 | 13 | 547 | 8 | C | | | | 547 | 8 | C | |
| | 4 | 10 | 13 | 440 | 7 | B | 10 | 13 | 1134 | 12 | D | | | | 1134 | 12 | D | |
| | 5 | 12 | 15 | 59 | 4 | B | 12 | 15 | 519 | 7 | B | | | | 519 | 7 | B | |
| | 6 | 12 | 15 | 77 | 4 | B | 12 | 15 | 1664 | 13 | D | | | | 1664 | 13 | D | |
| | 7 | 10 | 13 | 218 | 5 | B | 10 | 13 | 1229 | 12 | D | | | | 1229 | 12 | D | |
| | 8 | 10 | 13 | 371 | 6 | B | 15 | 18 | 867 | 8 | C | | | | 867 | 8 | C | |
| ***Tenth Ave @ 34th St*** | 1 | 12 | 15 | 154 | 5 | B | 12 | 15 | 1402 | 12 | D | | | | 1402 | 12 | D | |
| | 2 | 12 | 15 | 125 | 5 | B | 12 | 15 | 836 | 9 | C | | | | 836 | 9 | C | |
| | 3 | 17 | 20 | 246 | 5 | B | 17 | 20 | 753 | 7 | B | | | | 753 | 7 | B | |
| | 4 | 17 | 20 | 192 | 5 | B | 17 | 20 | 1159 | 9 | C | | | | 1159 | 9 | C | |
| | 5 | 12 | 15 | 203 | 5 | B | 12 | 15 | 909 | 9 | C | | | | 909 | 9 | C | |
| | 6 | 12 | 15 | 135 | 5 | B | 12 | 15 | 1932 | 15 | D | | | | 1932 | 15 | D | |
| | 7 | 17 | 20 | 133 | 5 | B | 26 | 30 | 1326 | 7 | B | | | | 1326 | 7 | B | |
| | 8 | 17 | 20 | 218 | 5 | B | 26 | 30 | 1343 | 7 | B | | | | 1343 | 7 | B | |
| ***Tenth Ave @ 35th St*** | 1 | 13 | 16 | 92 | 4 | B | 13 | 16 | 1234 | 10 | C | | | | 1234 | 10 | C | |
| | 2 | 13 | 15 | 94 | 4 | B | 13 | 15 | 763 | 8 | C | | | | 763 | 8 | C | |
| | 3 | 12 | 15 | 78 | 4 | B | 12 | 15 | 577 | 7 | B | | | | 577 | 7 | B | |
| | 4 | 7 | 9 | 1 | 4 | B | 7 | 9 | 610 | 10 | C | | | | 610 | 10 | C | |
| | 5 | 13 | 15 | 94 | 4 | B | 13 | 15 | 775 | 8 | C | | | | 775 | 8 | C | |
| | 6 | 11 | 15 | 84 | 5 | B | 11 | 15 | 1701 | 14 | D | | | | 1701 | 14 | D | |
| | 7 | 10 | 13 | 37 | 4 | B | 15 | 18 | 419 | 6 | B | | | | 419 | 6 | B | |
| | 8 | 12 | 14 | 84 | 4 | B | 20 | 24 | 842 | 7 | B | | | | 842 | 7 | B | |
| ***Tenth Ave @ 36th St*** | 1 | 12 | 15 | 82 | 4 | B | 12 | 15 | 1089 | 10 | C | | | | 1089 | 10 | C | |
| | 2 | 10 | 16 | 67 | 4 | B | 10 | 16 | 762 | 9 | C | | | | 762 | 9 | C | |
| | 3 | 9 | 12 | 52 | 4 | B | 9 | 12 | 363 | 7 | B | | | | 363 | 7 | B | |
| | 4 | 9 | 12 | 41 | 4 | B | 9 | 12 | 410 | 7 | B | | | | 410 | 7 | B | |
| | 5 | 12 | 15 | 64 | 4 | B | 12 | 15 | 656 | 8 | C | | | | 656 | 8 | C | |
| | 6 | 12 | 15 | 75 | 4 | B | 12 | 15 | 1317 | 11 | D | | | | 1317 | 11 | D | |
| | 7 | 9 | 12 | 27 | 4 | B | 15 | 18 | 326 | 5 | B | | | | 326 | 5 | B | |
| | 8 | 10 | 12 | 61 | 4 | B | 18 | 22 | 289 | 5 | B | | | | 289 | 5 | B | |
| ***Tenth Ave @ 37th St*** | 1 | 5 | 15 | 55 | 5 | B | 12 | 15 | 782 | 8 | C | | | | 782 | 8 | C | |
| | 2 | 5 | 15 | 78 | 5 | B | 5 | 15 | 753 | 14 | D | | | | 753 | 14 | D | |
| | 3 | 9 | 12 | 46 | 4 | B | 9 | 12 | 521 | 8 | C | | | | 521 | 8 | C | |
| | 4 | 9 | 12 | 38 | 4 | B | 9 | 12 | 287 | 6 | B | | | | 287 | 6 | B | |
| | 5 | 12 | 15 | 49 | 4 | B | 12 | 15 | 657 | 8 | C | | | | 657 | 8 | C | |
| | 6 | 12 | 15 | 56 | 4 | B | 12 | 15 | 1016 | 10 | C | | | | 1016 | 10 | C | |
| | 7 | 9 | 12 | 14 | 4 | B | 14 | 17 | 115 | 5 | B | | | | 115 | 5 | B | |
| | 8 | 9 | 12 | 62 | 4 | B | 18 | 22 | 615 | 6 | B | | | | 615 | 6 | B | |

# Appendix S.5.3

**Pedestrian Improvement Analysis - Sidewalks Level of Service**

**2025 Future Conditions (MD)**

| Intersection | Walkway Location | 2025 Future without the Proposed Action | | | | | 2025 Future with the Proposed Action | | | | | | 2025 Future with the Proposed Action (Improvement) | | | | | |
|---|---|---|---|---|---|---|---|---|---|---|---|---|---|---|---|---|---|---|
| | | Effective Walkway width | Actual walkway width | Sidewalk Volumes | Platoon Flow Rate (ped/min/ft) | Platoon Level of Service | Effective Walkway width | Actual walkway width | Sidewalk Volumes | Platoon Flow Rate (ped/min/ft) | Platoon Level of Service | Impact? | Proposed Effective Walkwa | Proposed Actual walkway width | Sidewalk Volumes | Platoon Flow Rate (ped/min/ft) | Platoon Level of Service | Still Impact? |
| ***Tenth Ave @ 38th St*** | 1 | 12 | 15 | 48 | 4 | B | 12 | 15 | 633 | 8 | C | | | | 633 | 8 | C | |
| | 2 | 12 | 15 | 61 | 4 | B | 12 | 15 | 616 | 7 | B | | | | 616 | 7 | B | |
| | 3 | 9 | 12 | 46 | 4 | B | 9 | 12 | 430 | 7 | B | | | | 430 | 7 | B | |
| | 4 | 9 | 12 | 19 | 4 | B | 9 | 12 | 316 | 6 | B | | | | 316 | 6 | B | |
| | 5 | 12 | 15 | 48 | 4 | B | 12 | 15 | 654 | 8 | C | | | | 654 | 8 | C | |
| | 6 | 12 | 15 | 48 | 4 | B | 12 | 15 | 703 | 8 | C | | | | 703 | 8 | C | |
| | 7 | 9 | 12 | 21 | 4 | B | 14 | 17 | 321 | 6 | B | | | | 321 | 6 | B | |
| | 8 | 9 | 12 | 20 | 4 | B | 18 | 22 | 594 | 6 | B | | | | 594 | 6 | B | |
| ***Tenth Ave @ 39th St*** | 1 | 12 | 15 | 51 | 4 | B | 12 | 15 | 504 | 7 | B | | | | 504 | 7 | B | |
| | 2 | 12 | 15 | 61 | 4 | B | 12 | 15 | 654 | 8 | C | | | | 654 | 8 | C | |
| | 3 | 9 | 12 | 46 | 4 | B | 9 | 12 | 127 | 5 | B | | | | 127 | 5 | B | |
| | 4 | 9 | 12 | 43 | 4 | B | 9 | 12 | 328 | 6 | B | | | | 328 | 6 | B | |
| | 5 | 12 | 15 | 59 | 4 | B | 12 | 15 | 508 | 7 | B | | | | 508 | 7 | B | |
| | 6 | 12 | 15 | 59 | 4 | B | 12 | 15 | 582 | 7 | B | | | | 582 | 7 | B | |
| | 7 | 10 | 13 | 41 | 4 | B | 15 | 18 | 347 | 6 | B | | | | 347 | 6 | B | |
| | 8 | 7 | 10 | 46 | 4 | B | 7 | 10 | 116 | 5 | B | | | | 116 | 5 | B | |
| ***Tenth Ave @ 40th St*** | 1 | 12 | 15 | 44 | 4 | B | 12 | 15 | 576 | 7 | B | | | | 576 | 7 | B | |
| | 2 | 12 | 15 | 51 | 4 | B | 12 | 15 | 915 | 9 | C | | | | 915 | 9 | C | |
| | 3 | 9 | 12 | 63 | 4 | B | 9 | 12 | 310 | 6 | B | | | | 310 | 6 | B | |
| | 4 | 9 | 12 | 45 | 4 | B | 9 | 12 | 92 | 5 | B | | | | 92 | 5 | B | |
| | 5 | 12 | 15 | 74 | 4 | B | 12 | 15 | 638 | 8 | C | | | | 638 | 8 | C | |
| | 6 | 12 | 15 | 49 | 4 | B | 12 | 15 | 474 | 7 | B | | | | 474 | 7 | B | |
| | 7 | 10 | 13 | 18 | 4 | B | 10 | 13 | 18 | 4 | B | | | | 18 | 4 | B | |
| | 8 | 10 | 13 | 30 | 4 | B | 14 | 18 | 274 | 5 | B | | | | 274 | 5 | B | |
| ***Tenth Ave @ 41st St*** | 1 | 12 | 15 | 60 | 4 | B | 12 | 15 | 403 | 6 | B | | | | 403 | 6 | B | |
| | 2 | 14 | 16 | 102 | 4 | B | 14 | 16 | 724 | 7 | B | | | | 724 | 7 | B | |
| | 3 | 8 | 10 | 122 | 5 | B | 8 | 10 | 214 | 6 | B | | | | 214 | 6 | B | |
| | 4 | 12 | 14 | 61 | 4 | B | 12 | 14 | 246 | 5 | B | | | | 246 | 5 | B | |
| | 5 | 13 | 16 | 72 | 4 | B | 13 | 16 | 1182 | 10 | C | | | | 1182 | 10 | C | |
| | 6 | 8 | 10 | 35 | 4 | B | 8 | 10 | 553 | 9 | C | | | | 553 | 9 | C | |
| | 7 | 13 | 17 | 11 | 4 | B | 13 | 17 | 298 | 6 | B | | | | 298 | 6 | B | |
| | 8 | 9 | 12 | 60 | 4 | B | 9 | 12 | 150 | 5 | B | | | | 150 | 5 | B | |
| ***Tenth Ave @ 42nd St*** | 1 | 17 | 20 | 102 | 4 | B | 17 | 20 | 304 | 5 | B | | | | 304 | 5 | B | |
| | 2 | 17 | 22 | 114 | 4 | B | 17 | 22 | 497 | 6 | B | | | | 497 | 6 | B | |
| | 3 | 18 | 21 | 332 | 5 | B | 18 | 21 | 407 | 6 | B | | | | 407 | 6 | B | |
| | 4 | 12 | 20 | 233 | 5 | B | 12 | 20 | 867 | 9 | C | | | | 867 | 9 | C | |
| | 5 | 8 | 16 | 66 | 5 | B | 8 | 16 | 481 | 8 | C | | | | 481 | 8 | C | |
| | 6 | 13 | 16 | 72 | 4 | B | 13 | 16 | 361 | 6 | B | | | | 361 | 6 | B | |
| | 7 | 13 | 15 | 189 | 5 | B | 13 | 15 | 693 | 8 | C | | | | 693 | 8 | C | |
| | 8 | 13 | 15 | 288 | 6 | B | 13 | 15 | 309 | 6 | B | | | | 309 | 6 | B | |
| ***Dyer @ 42nd St*** | 1 | 0 | 0 | 0 | N/A | N/A | 0 | 0 | 0 | N/A | N/A | | | | 0 | N/A | N/A | |
| | 2 | 0 | 0 | 0 | N/A | N/A | 0 | 0 | 0 | N/A | N/A | | | | 0 | N/A | N/A | |
| | 3 | 19 | 21 | 135 | 4 | B | 19 | 21 | 135 | 4 | B | | | | 135 | 4 | B | |
| | 4 | 18 | 20 | 105 | 4 | B | 18 | 20 | 105 | 4 | B | | | | 105 | 4 | B | |
| | 5 | 6 | 6 | 3 | 4 | B | 6 | 6 | 3 | 4 | B | | | | 3 | 4 | B | |
| | 6 | 2 | 4 | 5 | 4 | B | 2 | 4 | 5 | 4 | B | | | | 5 | 4 | B | |
| | 7 | 18 | 20 | 96 | 4 | B | 18 | 20 | 96 | 4 | B | | | | 96 | 4 | B | |
| | 8 | 19 | 21 | 112 | 4 | B | 19 | 21 | 112 | 4 | B | | | | 112 | 4 | B | |

# Appendix S.5.3

**Pedestrian Improvement Analysis - Sidewalks Level of Service**

**2025 Future Conditions (MD)**

| Intersection | Walkway Location | 2025 Future without the Proposed Action | | | | | 2025 Future with the Proposed Action | | | | | | 2025 Future with the Proposed Action (Improvement) | | | | | |
|---|---|---|---|---|---|---|---|---|---|---|---|---|---|---|---|---|---|---|
| | | Effective Walkway width | Actual walkway width | Sidewalk Volumes | Platoon Flow Rate (ped/min/ft) | Platoon Level of Service | Effective Walkway width | Actual walkway width | Sidewalk Volumes | Platoon Flow Rate (ped/min/ft) | Platoon Level of Service | Impact? | Proposed Effective Walkwa | Proposed Actual walkway width | Sidewalk Volumes | Platoon Flow Rate (ped/min/ft) | Platoon Level of Service | Still Impact? |
| ***Ninth Ave @ 30th St*** | 1 | 14 | 16 | 384 | 6 | B | 14 | 16 | 613 | 7 | B | | | | 613 | 7 | B | |
| | 2 | 8 | 15 | 686 | 10 | C | 8 | 15 | 900 | 12 | D | | | | 900 | 12 | D | |
| | 3 | 6 | 13 | 70 | 5 | B | 6 | 13 | 139 | 6 | B | | | | 139 | 6 | B | |
| | 4 | 10 | 13 | 81 | 5 | B | 10 | 13 | 146 | 5 | B | | | | 146 | 5 | B | |
| | 5 | 13 | 16 | 418 | 6 | B | 13 | 16 | 833 | 8 | C | | | | 833 | 8 | C | |
| | 6 | 13 | 16 | 377 | 6 | B | 13 | 16 | 800 | 8 | C | | | | 800 | 8 | C | |
| | 7 | 11 | 14 | 136 | 5 | B | 11 | 14 | 210 | 5 | B | | | | 210 | 5 | B | |
| | 8 | 10 | 12 | 193 | 5 | B | 10 | 12 | 649 | 8 | C | | | | 649 | 8 | C | |
| ***Ninth Ave @ 31st St*** | 1 | 12 | 15 | 235 | 5 | B | 17 | 20 | 595 | 6 | B | | | | 595 | 6 | B | |
| | 2 | 10 | 13 | 58 | 4 | B | 10 | 13 | 410 | 7 | B | | | | 410 | 7 | B | |
| | 3 | 10 | 13 | 1099 | 11 | D | 10 | 13 | 1264 | 12 | D | | | | 1264 | 12 | D | |
| | 4 | 10 | 13 | 122 | 5 | B | 10 | 13 | 205 | 5 | B | | | | 205 | 5 | B | |
| | 5 | 12 | 15 | 586 | 7 | B | 12 | 15 | 961 | 9 | C | | | | 961 | 9 | C | |
| | 6 | 12 | 15 | 441 | 6 | B | 12 | 15 | 829 | 9 | C | | | | 829 | 9 | C | |
| | 7 | 10 | 13 | 161 | 5 | B | 10 | 13 | 337 | 6 | B | | | | 337 | 6 | B | |
| | 8 | 10 | 13 | 310 | 6 | B | 10 | 13 | 609 | 8 | C | | | | 609 | 8 | C | |
| ***Ninth Ave @ 33rd St*** | 1 | 12 | 15 | 429 | 6 | B | 12 | 15 | 1119 | 10 | C | | | | 1119 | 10 | C | |
| | 2 | 12 | 15 | 617 | 7 | B | 12 | 15 | 1235 | 11 | D | | | | 1235 | 11 | D | |
| | 3 | 10 | 13 | 370 | 6 | B | 10 | 13 | 487 | 7 | B | | | | 487 | 7 | B | |
| | 4 | 10 | 13 | 1253 | 12 | D | 10 | 13 | 1490 | 14 | D | | | | 1490 | 14 | D | |
| | 5 | 12 | 15 | 208 | 5 | B | 12 | 15 | 678 | 8 | C | | | | 678 | 8 | C | |
| | 6 | 12 | 15 | 432 | 6 | B | 17 | 20 | 905 | 8 | C | | | | 905 | 8 | C | |
| | 7 | 10 | 13 | 599 | 8 | C | 15 | 18 | 1319 | 10 | C | | | | 1319 | 10 | C | |
| | 8 | 10 | 13 | 263 | 6 | B | 10 | 13 | 533 | 8 | C | | | | 533 | 8 | C | |
| ***Ninth Ave @ 34th St*** | 1 | 11 | 15 | 449 | 7 | B | 11 | 15 | 1024 | 10 | C | | | | 1024 | 10 | C | |
| | 2 | 12 | 15 | 505 | 7 | B | 12 | 15 | 1039 | 10 | C | | | | 1039 | 10 | C | |
| | 3 | 19 | 23 | 392 | 5 | B | 19 | 23 | 557 | 6 | B | | | | 557 | 6 | B | |
| | 4 | 19 | 23 | 376 | 5 | B | 19 | 23 | 529 | 6 | B | | | | 529 | 6 | B | |
| | 5 | 12 | 15 | 731 | 8 | C | 12 | 15 | 1394 | 12 | D | | | | 1394 | 12 | D | |
| | 6 | 12 | 15 | 552 | 7 | B | 12 | 15 | 1291 | 11 | D | | | | 1291 | 11 | D | |
| | 7 | 16 | 20 | 313 | 5 | B | 16 | 20 | 1221 | 9 | C | | | | 1221 | 9 | C | |
| | 8 | 15 | 20 | 422 | 6 | B | 15 | 20 | 849 | 8 | C | | | | 849 | 8 | C | |
| ***Ninth Ave @ 37th St*** | 1 | 12 | 15 | 305 | 6 | B | 12 | 15 | 708 | 8 | C | | | | 708 | 8 | C | |
| | 2 | 12 | 15 | 296 | 6 | B | 12 | 15 | 754 | 8 | C | | | | 754 | 8 | C | |
| | 3 | 9 | 12 | 152 | 5 | B | 9 | 12 | 302 | 6 | B | | | | 302 | 6 | B | |
| | 4 | 9 | 12 | 79 | 5 | B | 9 | 12 | 205 | 6 | B | | | | 205 | 6 | B | |
| | 5 | 10 | 15 | 336 | 6 | B | 10 | 15 | 846 | 10 | C | | | | 846 | 10 | C | |
| | 6 | 12 | 15 | 346 | 6 | B | 12 | 15 | 792 | 8 | C | | | | 792 | 8 | C | |
| | 7 | 6 | 12 | 70 | 5 | B | 6 | 12 | 249 | 7 | B | | | | 249 | 7 | B | |
| | 8 | 9 | 12 | 107 | 5 | B | 9 | 12 | 498 | 8 | C | | | | 498 | 8 | C | |
| ***Ninth Ave @ 38th St*** | 1 | 10 | 15 | 163 | 5 | B | 10 | 15 | 404 | 7 | B | | | | 404 | 7 | B | |
| | 2 | 8 | 15 | 129 | 5 | B | 8 | 15 | 575 | 9 | C | | | | 575 | 9 | C | |
| | 3 | 8 | 11 | 58 | 4 | B | 8 | 11 | 112 | 5 | B | | | | 112 | 5 | B | |
| | 4 | 8 | 11 | 42 | 4 | B | 8 | 11 | 186 | 6 | B | | | | 186 | 6 | B | |
| | 5 | 10 | 15 | 126 | 5 | B | 10 | 15 | 488 | 7 | B | | | | 488 | 7 | B | |
| | 6 | 12 | 15 | 113 | 5 | B | 12 | 15 | 427 | 6 | B | | | | 427 | 6 | B | |
| | 7 | 8 | 11 | 57 | 4 | B | 8 | 11 | 280 | 6 | B | | | | 280 | 6 | B | |
| | 8 | 8 | 11 | 40 | 4 | B | 8 | 11 | 350 | 7 | B | | | | 350 | 7 | B | |

# Appendix S.5.3

**Pedestrian Improvement Analysis - Sidewalks Level of Service**

**2025 Future Conditions (MD)**

| Intersection | Walkway Location | 2025 Future without the Proposed Action | | | | | 2025 Future with the Proposed Action | | | | | | 2025 Future with the Proposed Action (Improvement) | | | | | |
|---|---|---|---|---|---|---|---|---|---|---|---|---|---|---|---|---|---|---|
| | | Effective Walkway width | Actual walkway width | Sidewalk Volumes | Platoon Flow Rate (ped/min/ft) | Platoon Level of Service | Effective Walkway width | Actual walkway width | Sidewalk Volumes | Platoon Flow Rate (ped/min/ft) | Platoon Level of Service | Impact? | Proposed Effective Walkwa | Proposed Actual walkway width | Sidewalk Volumes | Platoon Flow Rate (ped/min/ft) | Platoon Level of Service | Still Impact? |
| ***Ninth Ave @ 39th St*** | 1 | 8 | 15 | 113 | 5 | B | 8 | 15 | 338 | 7 | B | | | | 338 | 7 | B | |
| | 2 | 11 | 15 | 204 | 5 | B | 11 | 15 | 664 | 8 | C | | | | 664 | 8 | C | |
| | 3 | 9 | 12 | 99 | 5 | B | 9 | 12 | 145 | 5 | B | | | | 145 | 5 | B | |
| | 4 | 9 | 12 | 111 | 5 | B | 9 | 12 | 180 | 5 | B | | | | 180 | 5 | B | |
| | 5 | 10 | 15 | 232 | 6 | B | 10 | 15 | 580 | 8 | C | | | | 580 | 8 | C | |
| | 6 | 12 | 15 | 154 | 5 | B | 12 | 15 | 294 | 6 | B | | | | 294 | 6 | B | |
| | 7 | 9 | 12 | 52 | 4 | B | 9 | 12 | 282 | 6 | B | | | | 282 | 6 | B | |
| | 8 | 9 | 12 | 55 | 4 | B | 9 | 12 | 129 | 5 | B | | | | 129 | 5 | B | |
| ***Ninth Ave @ 42nd St*** | 1 | 13 | 16 | 357 | 6 | B | 13 | 16 | 514 | 7 | B | | | | 514 | 7 | B | |
| | 2 | 8 | 10 | 294 | 6 | B | 8 | 10 | 470 | 8 | C | | | | 470 | 8 | C | |
| | 3 | 8 | 11 | 437 | 8 | C | 8 | 11 | 522 | 8 | C | | | | 522 | 8 | C | |
| | 4 | 12 | 19 | 501 | 7 | B | 12 | 19 | 687 | 8 | C | | | | 687 | 8 | C | |
| | 5 | 8 | 14 | 286 | 7 | B | 8 | 14 | 463 | 8 | C | | | | 463 | 8 | C | |
| | 6 | 8 | 15 | 234 | 6 | B | 8 | 15 | 383 | 7 | B | | | | 383 | 7 | B | |
| | 7 | 13 | 20 | 298 | 6 | B | 13 | 20 | 655 | 7 | B | | | | 655 | 7 | B | |
| | 8 | 18 | 21 | 370 | 5 | B | 18 | 21 | 419 | 6 | B | | | | 419 | 6 | B | |
| ***Eighth Ave @ 30th St*** | 1 | 11 | 14 | 506 | 7 | B | 11 | 14 | 632 | 8 | C | | | | 632 | 8 | C | |
| | 2 | 11 | 15 | 434 | 7 | B | 11 | 15 | 872 | 9 | C | | | | 872 | 9 | C | |
| | 3 | 9 | 13 | 180 | 5 | B | 9 | 13 | 236 | 6 | B | | | | 236 | 6 | B | |
| | 4 | 11 | 14 | 141 | 5 | B | 11 | 14 | 177 | 5 | B | | | | 177 | 5 | B | |
| | 5 | 12 | 15 | 224 | 5 | B | 12 | 15 | 518 | 7 | B | | | | 518 | 7 | B | |
| | 6 | 11 | 14 | 346 | 6 | B | 11 | 14 | 483 | 7 | B | | | | 483 | 7 | B | |
| | 7 | 10 | 14 | 76 | 5 | B | 10 | 14 | 121 | 5 | B | | | | 121 | 5 | B | |
| | 8 | 10 | 13 | 98 | 5 | B | 10 | 13 | 141 | 5 | B | | | | 141 | 5 | B | |
| ***Eighth Ave @ 31st St*** | 1 | 12 | 16 | 252 | 5 | B | 12 | 16 | 347 | 6 | B | | | | 347 | 6 | B | |
| | 2 | 18 | 24 | 172 | 5 | B | 17 | 20 | 524 | 6 | B | | | | 524 | 6 | B | |
| | 3 | 35 | 49 | 529 | 5 | B | 15 | 18 | 889 | 8 | C | | | | 889 | 8 | C | |
| | 4 | 10 | 14 | 108 | 5 | B | 10 | 14 | 176 | 5 | B | | | | 176 | 5 | B | |
| | 5 | 12 | 15 | 285 | 6 | B | 12 | 15 | 755 | 8 | C | | | | 755 | 8 | C | |
| | 6 | 12 | 15 | 307 | 6 | B | 12 | 15 | 475 | 7 | B | | | | 475 | 7 | B | |
| | 7 | 10 | 13 | 177 | 5 | B | 10 | 13 | 249 | 6 | B | | | | 249 | 6 | B | |
| | 8 | 21 | 24 | 597 | 6 | B | 21 | 24 | 732 | 6 | B | | | | 732 | 6 | B | |
| ***Eighth Ave @ 33rd St*** | 1 | 12 | 15 | 1120 | 10 | C | 12 | 15 | 1269 | 11 | D | | | | 1269 | 11 | D | |
| | 2 | 12 | 19 | 370 | 6 | B | 12 | 19 | 1061 | 10 | C | | | | 1061 | 10 | C | |
| | 3 | 10 | 17 | 401 | 7 | B | 10 | 17 | 464 | 7 | B | | | | 464 | 7 | B | |
| | 4 | 30 | 43 | 969 | 6 | B | 15 | 18 | 1450 | 10 | C | | | | 1450 | 10 | C | |
| | 5 | 30 | 43 | 457 | 5 | B | 17 | 20 | 922 | 8 | C | | | | 922 | 8 | C | |
| | 6 | 12 | 16 | 519 | 7 | B | 12 | 16 | 601 | 7 | B | | | | 601 | 7 | B | |
| | 7 | 13 | 24 | 1441 | 11 | D | 13 | 24 | 1588 | 12 | D | | | | 1588 | 12 | D | |
| | 8 | 7 | 14 | 490 | 9 | C | 7 | 14 | 589 | 10 | C | | | | 589 | 10 | C | |
| ***Eighth Ave @ 34th St*** | 1 | 11 | 15 | 542 | 7 | B | 11 | 15 | 673 | 8 | C | | | | 673 | 8 | C | |
| | 2 | 11 | 15 | 256 | 6 | B | 11 | 15 | 678 | 8 | C | | | | 678 | 8 | C | |
| | 3 | 19 | 22 | 582 | 6 | B | 19 | 22 | 627 | 6 | B | | | | 627 | 6 | B | |
| | 4 | 19 | 22 | 346 | 5 | B | 19 | 22 | 420 | 5 | B | | | | 420 | 5 | B | |
| | 5 | 12 | 15 | 238 | 5 | B | 12 | 15 | 905 | 9 | C | | | | 905 | 9 | C | |
| | 6 | 11 | 15 | 705 | 8 | C | 11 | 15 | 821 | 9 | C | | | | 821 | 9 | C | |
| | 7 | 12 | 22 | 213 | 5 | B | 12 | 22 | 329 | 6 | B | | | | 329 | 6 | B | |
| | 8 | 18 | 22 | 585 | 6 | B | 18 | 22 | 677 | 7 | B | | | | 677 | 7 | B | |

# Appendix S.5.3

**Pedestrian Improvement Analysis - Sidewalks Level of Service**

**2025 Future Conditions (MD)**

| Intersection | Walkway Location | 2025 Future without the Proposed Action | | | | | 2025 Future with the Proposed Action | | | | | | 2025 Future with the Proposed Action (Improvement) | | | | | |
|---|---|---|---|---|---|---|---|---|---|---|---|---|---|---|---|---|---|---|
| | | Effective Walkway width | Actual walkway width | Sidewalk Volumes | Platoon Flow Rate (ped/min/ft) | Platoon Level of Service | Effective Walkway width | Actual walkway width | Sidewalk Volumes | Platoon Flow Rate (ped/min/ft) | Platoon Level of Service | Impact? | Proposed Effective Walkwa | Proposed Actual walkway width | Sidewalk Volumes | Platoon Flow Rate (ped/min/ft) | Platoon Level of Service | Still Impact? |
| ***Eighth Ave @ 37th St*** | 1 | 8 | 15 | 221 | 6 | B | 8 | 15 | 274 | 6 | B | | | | 274 | 6 | B | |
| | 2 | 12 | 15 | 502 | 7 | B | 12 | 15 | 542 | 7 | B | | | | 542 | 7 | B | |
| | 3 | 9 | 12 | 142 | 5 | B | 9 | 12 | 180 | 5 | B | | | | 180 | 5 | B | |
| | 4 | 6 | 12 | 224 | 6 | B | 6 | 12 | 254 | 7 | B | | | | 254 | 7 | B | |
| | 5 | 9 | 15 | 182 | 5 | B | 9 | 15 | 309 | 6 | B | | | | 309 | 6 | B | |
| | 6 | 9 | 15 | 365 | 7 | B | 9 | 15 | 405 | 7 | B | | | | 405 | 7 | B | |
| | 7 | 5 | 12 | 235 | 7 | B | 5 | 12 | 317 | 8 | C | | | | 317 | 8 | C | |
| | 8 | 10 | 13 | 317 | 6 | B | 10 | 13 | 414 | 7 | B | | | | 414 | 7 | B | |
| ***Eighth Ave @ 38th St*** | 1 | 8 | 15 | 280 | 6 | B | 8 | 15 | 374 | 7 | B | | | | 374 | 7 | B | |
| | 2 | 10 | 15 | 207 | 5 | B | 10 | 15 | 260 | 6 | B | | | | 260 | 6 | B | |
| | 3 | 5 | 12 | 42 | 5 | B | 5 | 12 | 69 | 5 | B | | | | 69 | 5 | B | |
| | 4 | 9 | 12 | 126 | 5 | B | 9 | 12 | 156 | 5 | B | | | | 156 | 5 | B | |
| | 5 | 8 | 15 | 256 | 6 | B | 8 | 15 | 287 | 6 | B | | | | 287 | 6 | B | |
| | 6 | 10 | 15 | 310 | 6 | B | 10 | 15 | 356 | 6 | B | | | | 356 | 6 | B | |
| | 7 | 8 | 11 | 111 | 5 | B | 8 | 11 | 232 | 6 | B | | | | 232 | 6 | B | |
| | 8 | 8 | 11 | 91 | 5 | B | 8 | 11 | 105 | 5 | B | | | | 105 | 5 | B | |
| ***Eighth Ave @ 39th St*** | 1 | 12 | 15 | 689 | 8 | C | 12 | 15 | 828 | 9 | C | | | | 828 | 9 | C | |
| | 2 | 11 | 15 | 796 | 9 | C | 11 | 15 | 856 | 9 | C | | | | 856 | 9 | C | |
| | 3 | 8 | 12 | 336 | 7 | B | 8 | 12 | 363 | 7 | B | | | | 363 | 7 | B | |
| | 4 | 9 | 12 | 370 | 7 | B | 9 | 12 | 394 | 7 | B | | | | 394 | 7 | B | |
| | 5 | 12 | 15 | 615 | 7 | B | 12 | 15 | 672 | 8 | C | | | | 672 | 8 | C | |
| | 6 | 12 | 15 | 815 | 9 | C | 12 | 15 | 914 | 9 | C | | | | 914 | 9 | C | |
| | 7 | 9 | 12 | 246 | 6 | B | 9 | 12 | 310 | 6 | B | | | | 310 | 6 | B | |
| | 8 | 9 | 12 | 207 | 6 | B | 9 | 12 | 224 | 6 | B | | | | 224 | 6 | B | |
| ***Eighth Ave @ 42nd St*** | 1 | 7 | 15 | 584 | 10 | C | 7 | 15 | 612 | 10 | C | | | | 612 | 10 | C | |
| | 2 | 16 | 16 | 632 | 7 | B | 16 | 16 | 652 | 7 | B | | | | 652 | 7 | B | |
| | 3 | 15 | 23 | 771 | 7 | B | 15 | 23 | 835 | 8 | C | | | | 835 | 8 | C | |
| | 4 | 14 | 16 | 1042 | 9 | C | 14 | 16 | 1106 | 9 | C | | | | 1106 | 9 | C | |
| | 5 | 7 | 12 | 1022 | 14 | D | 7 | 12 | 1033 | 14 | D | | | | 1033 | 14 | D | |
| | 6 | 12 | 29 | 763 | 8 | C | 12 | 29 | 814 | 9 | C | | | | 814 | 9 | C | |
| | 7 | 12 | 34 | 645 | 8 | C | 12 | 34 | 800 | 8 | C | | | | 800 | 8 | C | |
| | 8 | 12 | 20 | 713 | 8 | C | 12 | 20 | 782 | 8 | C | | | | 782 | 8 | C | |
| ***Seventh Ave @ 31st St*** | 1 | 19 | 23 | 590 | 6 | B | 19 | 23 | 808 | 7 | B | | | | 808 | 7 | B | |
| | 2 | 19 | 23 | 603 | 6 | B | 19 | 23 | 701 | 6 | B | | | | 701 | 6 | B | |
| | 3 | 10 | 13 | 362 | 6 | B | 10 | 13 | 506 | 7 | B | | | | 506 | 7 | B | |
| | 4 | 10 | 13 | 308 | 6 | B | 10 | 13 | 328 | 6 | B | | | | 328 | 6 | B | |
| | 5 | 17 | 20 | 367 | 5 | B | 17 | 20 | 542 | 6 | B | | | | 542 | 6 | B | |
| | 6 | 16 | 20 | 585 | 6 | B | 16 | 20 | 811 | 7 | B | | | | 811 | 7 | B | |
| | 7 | 10 | 13 | 102 | 5 | B | 10 | 13 | 122 | 5 | B | | | | 122 | 5 | B | |
| | 8 | 15 | 18 | 478 | 6 | B | 15 | 18 | 730 | 7 | B | | | | 730 | 7 | B | |
| ***Seventh Ave @ 33rd St*** | 1 | 16 | 20 | 676 | 7 | B | 16 | 20 | 860 | 8 | C | | | | 860 | 8 | C | |
| | 2 | 15 | 20 | 810 | 8 | C | 15 | 20 | 941 | 8 | C | | | | 941 | 8 | C | |
| | 3 | 7 | 13 | 436 | 8 | C | 7 | 13 | 503 | 9 | C | | | | 503 | 9 | C | |
| | 4 | 10 | 13 | 595 | 8 | C | 10 | 13 | 750 | 9 | C | | | | 750 | 9 | C | |
| | 5 | 15 | 20 | 632 | 7 | B | 15 | 20 | 696 | 7 | B | | | | 696 | 7 | B | |
| | 6 | 37 | 40 | 571 | 5 | B | 37 | 40 | 739 | 5 | B | | | | 739 | 5 | B | |
| | 7 | 37 | 40 | 783 | 5 | B | 37 | 40 | 1076 | 6 | B | | | | 1076 | 6 | B | |
| | 8 | 9 | 15 | 510 | 8 | C | 9 | 15 | 534 | 8 | C | | | | 534 | 8 | C | |

# Appendix S.5.3

**Pedestrian Improvement Analysis - Sidewalks Level of Service**

**2025 Future Conditions (MD)**

| Intersection | Walkway Location | 2025 Future without the Proposed Action | | | | | 2025 Future with the Proposed Action | | | | | | 2025 Future with the Proposed Action (Improvement) | | | | | |
|---|---|---|---|---|---|---|---|---|---|---|---|---|---|---|---|---|---|---|
| | | Effective Walkway width | Actual walkway width | Sidewalk Volumes | Platoon Flow Rate (ped/min/ft) | Platoon Level of Service | Effective Walkway width | Actual walkway width | Sidewalk Volumes | Platoon Flow Rate (ped/min/ft) | Platoon Level of Service | Impact? | Proposed Effective Walkwa | Proposed Actual walkway width | Sidewalk Volumes | Platoon Flow Rate (ped/min/ft) | Platoon Level of Service | Still Impact? |
| ***Seventh Ave @ 34th St*** | 1 | 17 | 20 | 526 | 6 | B | 17 | 20 | 643 | 7 | B | | | | 643 | 7 | B | |
| | 2 | 17 | 20 | 372 | 5 | B | 17 | 20 | 474 | 6 | B | | | | 474 | 6 | B | |
| | 3 | 20 | 23 | 596 | 6 | B | 20 | 23 | 650 | 6 | B | | | | 650 | 6 | B | |
| | 4 | 20 | 23 | 443 | 5 | B | 20 | 23 | 493 | 6 | B | | | | 493 | 6 | B | |
| | 5 | 17 | 20 | 454 | 6 | B | 17 | 20 | 552 | 6 | B | | | | 552 | 6 | B | |
| | 6 | 17 | 20 | 324 | 5 | B | 17 | 20 | 475 | 6 | B | | | | 475 | 6 | B | |
| | 7 | 20 | 23 | 394 | 5 | B | 20 | 23 | 452 | 6 | B | | | | 452 | 6 | B | |
| | 8 | 20 | 23 | 545 | 6 | B | 20 | 23 | 574 | 6 | B | | | | 574 | 6 | B | |
| ***Sixth Ave @ 33rd St*** | 1 | 26 | 34 | 675 | 6 | B | 26 | 34 | 675 | 6 | B | | | | 675 | 6 | B | |
| | 2 | 25 | 28 | 443 | 5 | B | 25 | 28 | 461 | 5 | B | | | | 461 | 5 | B | |
| | 3 | 10 | 13 | 302 | 6 | B | 10 | 13 | 323 | 6 | B | | | | 323 | 6 | B | |
| | 4 | 10 | 13 | 486 | 7 | B | 10 | 13 | 507 | 7 | B | | | | 507 | 7 | B | |
| | 5 | 24 | 27 | 519 | 5 | B | 24 | 27 | 547 | 6 | B | | | | 547 | 6 | B | |
| | 6 | 17 | 24 | 654 | 7 | B | 17 | 24 | 687 | 7 | B | | | | 687 | 7 | B | |
| | 7 | 10 | 13 | 411 | 7 | B | 10 | 13 | 450 | 7 | B | | | | 450 | 7 | B | |
| | 8 | 10 | 13 | 239 | 6 | B | 10 | 13 | 264 | 6 | B | | | | 264 | 6 | B | |
| ***Sixth Ave @ 34th St*** | 1 | 0 | 0 | 0 | N/A | N/A | 0 | 0 | 0 | N/A | N/A | | | | 0 | N/A | N/A | |
| | 2 | 10 | 17 | 1829 | 16 | E | 10 | 17 | 1850 | 16 | E | | | | 1850 | 16 | E | |
| | 3 | 20 | 23 | 971 | 7 | B | 20 | 23 | 996 | 7 | B | | | | 996 | 7 | B | |
| | 4 | 18 | 23 | 618 | 6 | B | 18 | 23 | 643 | 6 | B | | | | 643 | 6 | B | |
| | 5 | 14 | 17 | 1762 | 12 | D | 14 | 17 | 1781 | 12 | D | | | | 1781 | 12 | D | |
| | 6 | 0 | 0 | 0 | N/A | N/A | 0 | 0 | 0 | N/A | N/A | | | | 0 | N/A | N/A | |
| | 7 | 0 | 0 | 0 | N/A | N/A | 0 | 0 | 0 | N/A | N/A | | | | 0 | N/A | N/A | |
| | 8 | 0 | 0 | 0 | N/A | N/A | 0 | 0 | 0 | N/A | N/A | | | | 0 | N/A | N/A | |
| ***Broadway @ 34th St*** | 1 | 25 | 30 | 1595 | 8 | C | 25 | 30 | 1710 | 9 | C | | | | 1710 | 9 | C | |
| | 2 | 0 | 0 | 0 | N/A | N/A | 0 | 0 | 0 | N/A | N/A | | | | 0 | N/A | N/A | |
| | 3 | 0 | 0 | 0 | N/A | N/A | 0 | 0 | 0 | N/A | N/A | | | | 0 | N/A | N/A | |
| | 4 | 0 | 0 | 0 | N/A | N/A | 0 | 0 | 0 | N/A | N/A | | | | 0 | N/A | N/A | |
| | 5 | 0 | 0 | 0 | N/A | N/A | 0 | 0 | 0 | N/A | N/A | | | | 0 | N/A | N/A | |
| | 6 | 25 | 30 | 1777 | 9 | C | 25 | 30 | 1899 | 9 | C | | | | 1899 | 9 | C | |
| | 7 | 18 | 23 | 1143 | 8 | C | 18 | 23 | 1170 | 8 | C | | | | 1170 | 8 | C | |
| | 8 | 18 | 23 | 929 | 7 | B | 18 | 23 | 974 | 8 | C | | | | 974 | 8 | C | |
| ***Blvd @ 33rd St*** | 1 | 0 | 0 | 0 | N/A | N/A | 15 | 15 | 1317 | 10 | C | | | | 1317 | 10 | C | |
| | 2 | 0 | 0 | 0 | N/A | N/A | 15 | 18 | 824 | 8 | C | | | | 824 | 8 | C | |
| | 3 | 0 | 0 | 0 | N/A | N/A | 15 | 18 | 749 | 7 | B | | | | 749 | 7 | B | |
| | 4 | 0 | 0 | 0 | N/A | N/A | 10 | 13 | 1128 | 12 | D | | | | 1128 | 12 | D | |
| | 5 | 0 | 0 | 0 | N/A | N/A | 0 | 0 | 0 | N/A | N/A | | | | 0 | N/A | N/A | |
| | 6 | 0 | 0 | 0 | N/A | N/A | 0 | 0 | 0 | N/A | N/A | | | | 0 | N/A | N/A | |
| | 7 | 0 | 0 | 0 | N/A | N/A | 10 | 13 | 447 | 7 | B | | | | 447 | 7 | B | |
| | 8 | 0 | 0 | 0 | N/A | N/A | 15 | 18 | 480 | 6 | B | | | | 480 | 6 | B | |
| ***Blvd @ 34th St*** | 1 | 0 | 0 | 0 | N/A | N/A | 15 | 18 | 1031 | 9 | C | | | | 1031 | 9 | C | |
| | 2 | 0 | 0 | 0 | N/A | N/A | 15 | 18 | 728 | 7 | B | | | | 728 | 7 | B | |
| | 3 | 0 | 0 | 0 | N/A | N/A | 26 | 30 | 772 | 6 | B | | | | 772 | 6 | B | |
| | 4 | 0 | 0 | 0 | N/A | N/A | 26 | 30 | 839 | 6 | B | | | | 839 | 6 | B | |
| | 5 | 0 | 0 | 0 | N/A | N/A | 15 | 18 | 799 | 8 | C | | | | 799 | 8 | C | |
| | 6 | 0 | 0 | 0 | N/A | N/A | 15 | 18 | 786 | 7 | B | | | | 786 | 7 | B | |
| | 7 | 0 | 0 | 0 | N/A | N/A | 26 | 30 | 621 | 6 | B | | | | 621 | 6 | B | |
| | 8 | 0 | 0 | 0 | N/A | N/A | 26 | 30 | 866 | 6 | B | | | | 866 | 6 | B | |

# Appendix S.5.3

**Pedestrian Improvement Analysis - Sidewalks Level of Service**

**2025 Future Conditions (MD)**

| Intersection | Walkway Location | 2025 Future without the Proposed Action | | | | | 2025 Future with the Proposed Action | | | | | | 2025 Future with the Proposed Action (Improvement) | | | | | |
|---|---|---|---|---|---|---|---|---|---|---|---|---|---|---|---|---|---|---|
| | | Effective Walkway width | Actual walkway width | Sidewalk Volumes | Platoon Flow Rate (ped/min/ft) | Platoon Level of Service | Effective Walkway width | Actual walkway width | Sidewalk Volumes | Platoon Flow Rate (ped/min/ft) | Platoon Level of Service | Impact? | Proposed Effective Walkwa | Proposed Actual walkway width | Sidewalk Volumes | Platoon Flow Rate (ped/min/ft) | Platoon Level of Service | Still Impact? |
| ***N.Blvd @ 35th St*** | 1 | 0 | 0 | 0 | N/A | N/A | 0 | 0 | 0 | N/A | N/A | | | | 0 | N/A | N/A | |
| | 2 | 0 | 0 | 0 | N/A | N/A | 15 | 18 | 966 | 8 | C | | | | 966 | 8 | C | |
| | 3 | 0 | 0 | 0 | N/A | N/A | 20 | 24 | 536 | 6 | B | | | | 536 | 6 | B | |
| | 4 | 0 | 0 | 0 | N/A | N/A | 15 | 18 | 396 | 6 | B | | | | 396 | 6 | B | |
| | 5 | 0 | 0 | 0 | N/A | N/A | 15 | 18 | 918 | 8 | C | | | | 918 | 8 | C | |
| | 6 | 0 | 0 | 0 | N/A | N/A | 15 | 18 | 1652 | 11 | D | | | | 1652 | 11 | D | |
| | 7 | 0 | 0 | 0 | N/A | N/A | 15 | 18 | 165 | 5 | B | | | | 165 | 5 | B | |
| | 8 | 0 | 0 | 0 | N/A | N/A | 0 | 0 | 0 | N/A | N/A | | | | 0 | N/A | N/A | |
| ***N.Blvd @ 36th St*** | 1 | 0 | 0 | 0 | N/A | N/A | 0 | 0 | 0 | N/A | N/A | | | | 0 | N/A | N/A | |
| | 2 | 0 | 0 | 0 | N/A | N/A | 15 | 18 | 733 | 7 | B | | | | 733 | 7 | B | |
| | 3 | 0 | 0 | 0 | N/A | N/A | 18 | 22 | 229 | 5 | B | | | | 229 | 5 | B | |
| | 4 | 0 | 0 | 0 | N/A | N/A | 15 | 18 | 308 | 5 | B | | | | 308 | 5 | B | |
| | 5 | 0 | 0 | 0 | N/A | N/A | 15 | 18 | 870 | 8 | C | | | | 870 | 8 | C | |
| | 6 | 0 | 0 | 0 | N/A | N/A | 0 | 0 | 0 | N/A | N/A | | | | 0 | N/A | N/A | |
| | 7 | 0 | 0 | 0 | N/A | N/A | 0 | 0 | 0 | N/A | N/A | | | | 0 | N/A | N/A | |
| | 8 | 0 | 0 | 0 | N/A | N/A | 0 | 0 | 0 | N/A | N/A | | | | 0 | N/A | N/A | |
| ***N.Blvd @ 37th St*** | 1 | 0 | 0 | 0 | N/A | N/A | 0 | 0 | 0 | N/A | N/A | | | | 0 | N/A | N/A | |
| | 2 | 0 | 0 | 0 | N/A | N/A | 15 | 18 | 694 | 7 | B | | | | 694 | 7 | B | |
| | 3 | 0 | 0 | 0 | N/A | N/A | 18 | 22 | 556 | 6 | B | | | | 556 | 6 | B | |
| | 4 | 0 | 0 | 0 | N/A | N/A | 14 | 17 | 104 | 4 | B | | | | 104 | 4 | B | |
| | 5 | 0 | 0 | 0 | N/A | N/A | 15 | 18 | 654 | 7 | B | | | | 654 | 7 | B | |
| | 6 | 0 | 0 | 0 | N/A | N/A | 0 | 0 | 0 | N/A | N/A | | | | 0 | N/A | N/A | |
| | 7 | 0 | 0 | 0 | N/A | N/A | 0 | 0 | 0 | N/A | N/A | | | | 0 | N/A | N/A | |
| | 8 | 0 | 0 | 0 | N/A | N/A | 0 | 0 | 0 | N/A | N/A | | | | 0 | N/A | N/A | |
| ***Blvd @ 38th St*** | 1 | 0 | 0 | 0 | N/A | N/A | 15 | 18 | 842 | 8 | C | | | | 842 | 8 | C | |
| | 2 | 0 | 0 | 0 | N/A | N/A | 15 | 18 | 469 | 6 | B | | | | 469 | 6 | B | |
| | 3 | 0 | 0 | 0 | N/A | N/A | 18 | 22 | 514 | 6 | B | | | | 514 | 6 | B | |
| | 4 | 0 | 0 | 0 | N/A | N/A | 14 | 17 | 304 | 5 | B | | | | 304 | 5 | B | |
| | 5 | 0 | 0 | 0 | N/A | N/A | 15 | 18 | 597 | 7 | B | | | | 597 | 7 | B | |
| | 6 | 0 | 0 | 0 | N/A | N/A | 15 | 18 | 1014 | 9 | C | | | | 1014 | 9 | C | |
| | 7 | 0 | 0 | 0 | N/A | N/A | 14 | 17 | 85 | 4 | B | | | | 85 | 4 | B | |
| | 8 | 0 | 0 | 0 | N/A | N/A | 18 | 22 | 427 | 6 | B | | | | 427 | 6 | B | |
| ***S.Blvd @ 35th St*** | 1 | 0 | 0 | 0 | N/A | N/A | 15 | 18 | 1566 | 11 | D | | | | 1566 | 11 | D | |
| | 2 | 0 | 0 | 0 | N/A | N/A | 0 | 0 | 0 | N/A | N/A | | | | 0 | N/A | N/A | |
| | 3 | 0 | 0 | 0 | N/A | N/A | 0 | 0 | 0 | N/A | N/A | | | | 0 | N/A | N/A | |
| | 4 | 0 | 0 | 0 | N/A | N/A | 0 | 0 | 0 | N/A | N/A | | | | 0 | N/A | N/A | |
| | 5 | 0 | 0 | 0 | N/A | N/A | 0 | 0 | 0 | N/A | N/A | | | | 0 | N/A | N/A | |
| | 6 | 0 | 0 | 0 | N/A | N/A | 0 | 0 | 0 | N/A | N/A | | | | 0 | N/A | N/A | |
| | 7 | 0 | 0 | 0 | N/A | N/A | 15 | 18 | 165 | 5 | B | | | | 165 | 5 | B | |
| | 8 | 0 | 0 | 0 | N/A | N/A | 20 | 24 | 428 | 5 | B | | | | 428 | 5 | B | |
| ***S.Blvd @ 36th St*** | 1 | 0 | 0 | 0 | N/A | N/A | 15 | 18 | 1132 | 9 | C | | | | 1132 | 9 | C | |
| | 2 | 0 | 0 | 0 | N/A | N/A | 0 | 0 | 0 | N/A | N/A | | | | 0 | N/A | N/A | |
| | 3 | 0 | 0 | 0 | N/A | N/A | 0 | 0 | 0 | N/A | N/A | | | | 0 | N/A | N/A | |
| | 4 | 0 | 0 | 0 | N/A | N/A | 0 | 0 | 0 | N/A | N/A | | | | 0 | N/A | N/A | |
| | 5 | 0 | 0 | 0 | N/A | N/A | 0 | 0 | 0 | N/A | N/A | | | | 0 | N/A | N/A | |
| | 6 | 0 | 0 | 0 | N/A | N/A | 15 | 18 | 1326 | 10 | C | | | | 1326 | 10 | C | |
| | 7 | 0 | 0 | 0 | N/A | N/A | 15 | 18 | 169 | 5 | B | | | | 169 | 5 | B | |
| | 8 | 0 | 0 | 0 | N/A | N/A | 18 | 22 | 188 | 5 | B | | | | 188 | 5 | B | |

# Appendix S.5.3

**Pedestrian Improvement Analysis - Sidewalks Level of Service**

**2025 Future Conditions (MD)**

| Intersection | Walkway Location | 2025 Future without the Proposed Action | | | | | 2025 Future with the Proposed Action | | | | | | 2025 Future with the Proposed Action (Improvement) | | | | | |
|---|---|---|---|---|---|---|---|---|---|---|---|---|---|---|---|---|---|---|
| | | Effective Walkway width | Actual walkway width | Sidewalk Volumes | Platoon Flow Rate (ped/min/ft) | Platoon Level of Service | Effective Walkway width | Actual walkway width | Sidewalk Volumes | Platoon Flow Rate (ped/min/ft) | Platoon Level of Service | Impact? | Proposed Effective Walkwa | Proposed Actual walkway width | Sidewalk Volumes | Platoon Flow Rate (ped/min/ft) | Platoon Level of Service | Still Impact? |
| ***S.Blvd @ 37th St*** | 1 | 0 | 0 | 0 | N/A | N/A | 15 | 18 | 1136 | 9 | C | | | | 1136 | 9 | C | |
| | 2 | 0 | 0 | 0 | N/A | N/A | 0 | 0 | 0 | N/A | N/A | | | | 0 | N/A | N/A | |
| | 3 | 0 | 0 | 0 | N/A | N/A | 0 | 0 | 0 | N/A | N/A | | | | 0 | N/A | N/A | |
| | 4 | 0 | 0 | 0 | N/A | N/A | 0 | 0 | 0 | N/A | N/A | | | | 0 | N/A | N/A | |
| | 5 | 0 | 0 | 0 | N/A | N/A | 0 | 0 | 0 | N/A | N/A | | | | 0 | N/A | N/A | |
| | 6 | 0 | 0 | 0 | N/A | N/A | 15 | 18 | 1134 | 9 | C | | | | 1134 | 9 | C | |
| | 7 | 0 | 0 | 0 | N/A | N/A | 14 | 17 | 50 | 4 | B | | | | 50 | 4 | B | |
| | 8 | 0 | 0 | 0 | N/A | N/A | 18 | 22 | 461 | 6 | B | | | | 461 | 6 | B | |

# Appendix S.5.3

**Pedestrian Improvement Analysis - Sidewalks Level of Service**

**2025 Future Conditions (PM)**

| Intersection | Walkway Location | 2025 Future without the Proposed Action | | | | | 2025 Future with the Proposed Action | | | | | | 2025 Future with the Proposed Action (Improvement) | | | | | |
|---|---|---|---|---|---|---|---|---|---|---|---|---|---|---|---|---|---|---|
| | | Effective Walkway width | Actual walkway width | Sidewalk Volumes | Platoon Flow Rate (ped/min/ft) | Platoon Level of Service | Effective Walkway width | Actual walkway width | Sidewalk Volumes | Platoon Flow Rate (ped/min/ft) | Platoon Level of Service | Impact? | Proposed Effective Walkwa | Proposed Actual walkway width | Sidewalk Volumes | Platoon Flow Rate (ped/min/ft) | Platoon Level of Service | Still Impact? |
| ***Twelfth Ave @ 30th St*** | 1 | 0 | 0 | 0 | N/A | N/A | 0 | 0 | 0 | N/A | N/A | | | | 0 | N/A | N/A | |
| | 2 | 9 | 11 | 7 | 4 | B | 9 | 11 | 7 | 4 | B | | | | 7 | 4 | B | |
| | 3 | 10 | 13 | 2 | 4 | B | 10 | 13 | 2 | 4 | B | | | | 2 | 4 | B | |
| | 4 | 10 | 13 | 3 | 4 | B | 10 | 13 | 3 | 4 | B | | | | 3 | 4 | B | |
| | 5 | 12 | 15 | 2 | 4 | B | 12 | 15 | 2 | 4 | B | | | | 2 | 4 | B | |
| | 6 | 0 | 0 | 0 | N/A | N/A | 0 | 0 | 0 | N/A | N/A | | | | 0 | N/A | N/A | |
| | 7 | 0 | 0 | 0 | N/A | N/A | 0 | 0 | 0 | N/A | N/A | | | | 0 | N/A | N/A | |
| | 8 | 0 | 0 | 0 | N/A | N/A | 0 | 0 | 0 | N/A | N/A | | | | 0 | N/A | N/A | |
| ***Twelfth Ave @ 34th St*** | 1 | 0 | 0 | 0 | N/A | N/A | 0 | 0 | 0 | N/A | N/A | | | | 0 | N/A | N/A | |
| | 2 | 9 | 12 | 1 | 4 | B | 9 | 12 | 7 | 4 | B | | | | 7 | 4 | B | |
| | 3 | 15 | 18 | 19 | 4 | B | 15 | 18 | 21 | 4 | B | | | | 21 | 4 | B | |
| | 4 | 15 | 18 | 95 | 4 | B | 15 | 18 | 105 | 4 | B | | | | 105 | 4 | B | |
| | 5 | 9 | 12 | 0 | 4 | B | 9 | 12 | 0 | 4 | B | | | | 0 | 4 | B | |
| | 6 | 0 | 0 | 0 | N/A | N/A | 0 | 0 | 0 | N/A | N/A | | | | 0 | N/A | N/A | |
| | 7 | 0 | 0 | 0 | N/A | N/A | 0 | 0 | 0 | N/A | N/A | | | | 0 | N/A | N/A | |
| | 8 | 0 | 0 | 0 | N/A | N/A | 0 | 0 | 0 | N/A | N/A | | | | 0 | N/A | N/A | |
| ***Twelfth Ave @ 39th St*** | 1 | 0 | 0 | 0 | N/A | N/A | 0 | 0 | 0 | N/A | N/A | | | | 0 | N/A | N/A | |
| | 2 | 10 | 13 | 3 | 4 | B | 10 | 13 | 3 | 4 | B | | | | 3 | 4 | B | |
| | 3 | 10 | 13 | 0 | 4 | B | 0 | 0 | 0 | N/A | N/A | | | | 0 | N/A | N/A | |
| | 4 | 10 | 13 | 60 | 4 | B | 0 | 0 | 0 | N/A | N/A | | | | 0 | N/A | N/A | |
| | 5 | 15 | 18 | 4 | 4 | B | 15 | 18 | 10 | 4 | B | | | | 10 | 4 | B | |
| | 6 | 0 | 0 | 0 | N/A | N/A | 0 | 0 | 0 | N/A | N/A | | | | 0 | N/A | N/A | |
| | 7 | 0 | 0 | 0 | N/A | N/A | 0 | 0 | 0 | N/A | N/A | | | | 0 | N/A | N/A | |
| | 8 | 0 | 0 | 0 | N/A | N/A | 0 | 0 | 0 | N/A | N/A | | | | 0 | N/A | N/A | |
| ***Twelfth Ave @ 40th St*** | 1 | 0 | 0 | 0 | N/A | N/A | 0 | 0 | 0 | N/A | N/A | | | | 0 | N/A | N/A | |
| | 2 | 10 | 13 | 5 | 4 | B | 10 | 13 | 5 | 4 | B | | | | 5 | 4 | B | |
| | 3 | 9 | 11 | 3 | 4 | B | 0 | 0 | 0 | N/A | N/A | | | | 0 | N/A | N/A | |
| | 4 | 9 | 12 | 0 | 4 | B | 0 | 0 | 0 | N/A | N/A | | | | 0 | N/A | N/A | |
| | 5 | 11 | 14 | 1 | 4 | B | 11 | 14 | 1 | 4 | B | | | | 1 | 4 | B | |
| | 6 | 0 | 0 | 0 | N/A | N/A | 0 | 0 | 0 | N/A | N/A | | | | 0 | N/A | N/A | |
| | 7 | 0 | 0 | 0 | N/A | N/A | 0 | 0 | 0 | N/A | N/A | | | | 0 | N/A | N/A | |
| | 8 | 0 | 0 | 0 | N/A | N/A | 0 | 0 | 0 | N/A | N/A | | | | 0 | N/A | N/A | |
| ***Twelfth Ave @ 42nd St*** | 1 | 0 | 0 | 0 | N/A | N/A | 0 | 0 | 0 | N/A | N/A | | | | 0 | N/A | N/A | |
| | 2 | 17 | 20 | 29 | 4 | B | 17 | 20 | 33 | 4 | B | | | | 33 | 4 | B | |
| | 3 | 12 | 15 | 114 | 5 | B | 12 | 15 | 110 | 5 | B | | | | 110 | 5 | B | |
| | 4 | 23 | 26 | 114 | 4 | B | 23 | 26 | 118 | 4 | B | | | | 118 | 4 | B | |
| | 5 | 17 | 20 | 18 | 4 | B | 17 | 20 | 18 | 4 | B | | | | 18 | 4 | B | |
| | 6 | 0 | 0 | 0 | N/A | N/A | 0 | 0 | 0 | N/A | N/A | | | | 0 | N/A | N/A | |
| | 7 | 0 | 0 | 0 | N/A | N/A | 0 | 0 | 0 | N/A | N/A | | | | 0 | N/A | N/A | |
| | 8 | 0 | 0 | 0 | N/A | N/A | 0 | 0 | 0 | N/A | N/A | | | | 0 | N/A | N/A | |
| ***Eleventh Ave @ 29th St*** | 1 | 12 | 15 | 23 | 4 | B | 12 | 15 | 133 | 5 | B | | | | 133 | 5 | B | |
| | 2 | 12 | 15 | 48 | 4 | B | 12 | 15 | 205 | 5 | B | | | | 205 | 5 | B | |
| | 3 | 10 | 13 | 7 | 4 | B | 10 | 13 | 88 | 5 | B | | | | 88 | 5 | B | |
| | 4 | 10 | 13 | 11 | 4 | B | 10 | 13 | 23 | 4 | B | | | | 23 | 4 | B | |
| | 5 | 12 | 15 | 47 | 4 | B | 12 | 15 | 149 | 5 | B | | | | 149 | 5 | B | |
| | 6 | 12 | 15 | 19 | 4 | B | 12 | 15 | 91 | 5 | B | | | | 91 | 5 | B | |
| | 7 | 10 | 13 | 8 | 4 | B | 10 | 13 | 8 | 4 | B | | | | 8 | 4 | B | |
| | 8 | 10 | 13 | 4 | 4 | B | 10 | 13 | 4 | 4 | B | | | | 4 | 4 | B | |

# Appendix S.5.3

**Pedestrian Improvement Analysis - Sidewalks Level of Service**

**2025 Future Conditions (PM)**

| Intersection | Walkway Location | 2025 Future without the Proposed Action | | | | | 2025 Future with the Proposed Action | | | | | | 2025 Future with the Proposed Action (Improvement) | | | | | |
|---|---|---|---|---|---|---|---|---|---|---|---|---|---|---|---|---|---|---|
| | | Effective Walkway width | Actual walkway width | Sidewalk Volumes | Platoon Flow Rate (ped/min/ft) | Platoon Level of Service | Effective Walkway width | Actual walkway width | Sidewalk Volumes | Platoon Flow Rate (ped/min/ft) | Platoon Level of Service | Impact? | Proposed Effective Walkwa | Proposed Actual walkway width | Sidewalk Volumes | Platoon Flow Rate (ped/min/ft) | Platoon Level of Service | Still Impact? |
| ***Eleventh Ave @ 30th St*** | 1 | 12 | 15 | 18 | 4 | B | 12 | 15 | 90 | 5 | B | | | | 90 | 5 | B | |
| | 2 | 12 | 15 | 57 | 4 | B | 17 | 20 | 180 | 5 | B | | | | 180 | 5 | B | |
| | 3 | 10 | 13 | 30 | 4 | B | 10 | 13 | 130 | 5 | B | | | | 130 | 5 | B | |
| | 4 | 10 | 13 | 7 | 4 | B | 10 | 13 | 29 | 4 | B | | | | 29 | 4 | B | |
| | 5 | 12 | 15 | 71 | 4 | B | 12 | 15 | 246 | 5 | B | | | | 246 | 5 | B | |
| | 6 | 12 | 15 | 26 | 4 | B | 12 | 15 | 153 | 5 | B | | | | 153 | 5 | B | |
| | 7 | 10 | 13 | 6 | 4 | B | 10 | 13 | 6 | 4 | B | | | | 6 | 4 | B | |
| | 8 | 10 | 13 | 9 | 4 | B | 10 | 13 | 47 | 4 | B | | | | 47 | 4 | B | |
| ***Eleventh Ave @ 33rd St*** | 1 | 12 | 15 | 6 | 4 | B | 12 | 15 | 166 | 5 | B | | | | 166 | 5 | B | |
| | 2 | 12 | 15 | 70 | 4 | B | 17 | 20 | 257 | 5 | B | | | | 257 | 5 | B | |
| | 3 | 10 | 13 | 45 | 4 | B | 15 | 18 | 130 | 5 | B | | | | 130 | 5 | B | |
| | 4 | 10 | 13 | 3 | 4 | B | 10 | 13 | 160 | 5 | B | | | | 160 | 5 | B | |
| | 5 | 12 | 15 | 34 | 4 | B | 17 | 20 | 264 | 5 | B | | | | 264 | 5 | B | |
| | 6 | 12 | 15 | 5 | 4 | B | 12 | 15 | 41 | 4 | B | | | | 41 | 4 | B | |
| | 7 | 10 | 13 | 1 | 4 | B | 0 | 0 | 0 | N/A | N/A | | | | 0 | N/A | N/A | |
| | 8 | 10 | 13 | 0 | 4 | B | 0 | 0 | 0 | N/A | N/A | | | | 0 | N/A | N/A | |
| ***Eleventh Ave @ 34th St*** | 1 | 13 | 15 | 6 | 4 | B | 13 | 15 | 222 | 5 | B | | | | 222 | 5 | B | |
| | 2 | 9 | 12 | 50 | 4 | B | 14 | 17 | 285 | 5 | B | | | | 285 | 5 | B | |
| | 3 | 17 | 20 | 81 | 4 | B | 26 | 30 | 176 | 4 | B | | | | 176 | 4 | B | |
| | 4 | 17 | 20 | 62 | 4 | B | 26 | 30 | 225 | 5 | B | | | | 225 | 5 | B | |
| | 5 | 12 | 15 | 60 | 4 | B | 17 | 20 | 320 | 5 | B | | | | 320 | 5 | B | |
| | 6 | 12 | 15 | 9 | 4 | B | 12 | 15 | 245 | 5 | B | | | | 245 | 5 | B | |
| | 7 | 17 | 20 | 100 | 4 | B | 17 | 20 | 110 | 4 | B | | | | 110 | 4 | B | |
| | 8 | 17 | 20 | 26 | 4 | B | 17 | 20 | 28 | 4 | B | | | | 28 | 4 | B | |
| ***Eleventh Ave @ 35th St*** | 1 | 16 | 19 | 14 | 4 | B | 16 | 19 | 76 | 4 | B | | | | 76 | 4 | B | |
| | 2 | 14 | 15 | 33 | 4 | B | 14 | 15 | 222 | 5 | B | | | | 222 | 5 | B | |
| | 3 | 12 | 14 | 2 | 4 | B | 20 | 24 | 76 | 4 | B | | | | 76 | 4 | B | |
| | 4 | 12 | 14 | 0 | 4 | B | 17 | 19 | 75 | 4 | B | | | | 75 | 4 | B | |
| | 5 | 8 | 11 | 31 | 4 | B | 13 | 16 | 270 | 5 | B | | | | 270 | 5 | B | |
| | 6 | 12 | 15 | 9 | 4 | B | 12 | 15 | 226 | 5 | B | | | | 226 | 5 | B | |
| | 7 | 0 | 0 | 0 | N/A | N/A | 0 | 0 | 0 | N/A | N/A | | | | 0 | N/A | N/A | |
| | 8 | 0 | 0 | 0 | N/A | N/A | 0 | 0 | 0 | N/A | N/A | | | | 0 | N/A | N/A | |
| ***Eleventh Ave @ 36th St*** | 1 | 12 | 15 | 10 | 4 | B | 12 | 15 | 101 | 5 | B | | | | 101 | 5 | B | |
| | 2 | 7 | 9 | 33 | 4 | B | 12 | 15 | 295 | 6 | B | | | | 295 | 6 | B | |
| | 3 | 10 | 13 | 1 | 4 | B | 18 | 22 | 116 | 4 | B | | | | 116 | 4 | B | |
| | 4 | 8 | 10 | 4 | 4 | B | 15 | 18 | 191 | 5 | B | | | | 191 | 5 | B | |
| | 5 | 12 | 15 | 31 | 4 | B | 18 | 20 | 1384 | 9 | C | | | | 1384 | 9 | C | |
| | 6 | 13 | 17 | 14 | 4 | B | 13 | 17 | 76 | 4 | B | | | | 76 | 4 | B | |
| | 7 | 0 | 0 | 0 | N/A | N/A | 0 | 0 | 0 | N/A | N/A | | | | 0 | N/A | N/A | |
| | 8 | 0 | 0 | 0 | N/A | N/A | 0 | 0 | 0 | N/A | N/A | | | | 0 | N/A | N/A | |
| ***Eleventh Ave @ 37th St*** | 1 | 12 | 15 | 3 | 4 | B | 12 | 15 | 72 | 4 | B | | | | 72 | 4 | B | |
| | 2 | 7 | 10 | 39 | 4 | B | 12 | 15 | 328 | 6 | B | | | | 328 | 6 | B | |
| | 3 | 9 | 12 | 0 | 4 | B | 18 | 22 | 93 | 4 | B | | | | 93 | 4 | B | |
| | 4 | 9 | 12 | 1 | 4 | B | 14 | 17 | 43 | 4 | B | | | | 43 | 4 | B | |
| | 5 | 7 | 10 | 23 | 4 | B | 12 | 15 | 354 | 6 | B | | | | 354 | 6 | B | |
| | 6 | 12 | 15 | 8 | 4 | B | 12 | 15 | 98 | 5 | B | | | | 98 | 5 | B | |
| | 7 | 0 | 0 | 0 | N/A | N/A | 0 | 0 | 0 | N/A | N/A | | | | 0 | N/A | N/A | |
| | 8 | 0 | 0 | 0 | N/A | N/A | 0 | 0 | 0 | N/A | N/A | | | | 0 | N/A | N/A | |

# Appendix S.5.3

**Pedestrian Improvement Analysis - Sidewalks Level of Service**

**2025 Future Conditions (PM)**

| Intersection | Walkway Location | 2025 Future without the Proposed Action | | | | | 2025 Future with the Proposed Action | | | | | | 2025 Future with the Proposed Action (Improvement) | | | | | |
|---|---|---|---|---|---|---|---|---|---|---|---|---|---|---|---|---|---|---|
| | | Effective Walkway width | Actual walkway width | Sidewalk Volumes | Platoon Flow Rate (ped/min/ft) | Platoon Level of Service | Effective Walkway width | Actual walkway width | Sidewalk Volumes | Platoon Flow Rate (ped/min/ft) | Platoon Level of Service | Impact? | Proposed Effective Walkwa | Proposed Actual walkway width | Sidewalk Volumes | Platoon Flow Rate (ped/min/ft) | Platoon Level of Service | Still Impact? |
| ***Eleventh Ave @ 38th St*** | 1 | 12 | 15 | 1 | 4 | B | 12 | 15 | 91 | 5 | B | | | | 91 | 5 | B | |
| | 2 | 7 | 10 | 2 | 4 | B | 12 | 15 | 274 | 6 | B | | | | 274 | 6 | B | |
| | 3 | 8 | 11 | 0 | 4 | B | 18 | 22 | 50 | 4 | B | | | | 50 | 4 | B | |
| | 4 | 8 | 11 | 2 | 4 | B | 14 | 17 | 81 | 4 | B | | | | 81 | 4 | B | |
| | 5 | 7 | 10 | 19 | 4 | B | 12 | 15 | 311 | 6 | B | | | | 311 | 6 | B | |
| | 6 | 12 | 15 | 0 | 4 | B | 12 | 15 | 69 | 4 | B | | | | 69 | 4 | B | |
| | 7 | 0 | 0 | 0 | N/A | N/A | 0 | 0 | 0 | N/A | N/A | | | | 0 | N/A | N/A | |
| | 8 | 0 | 0 | 0 | N/A | N/A | 0 | 0 | 0 | N/A | N/A | | | | 0 | N/A | N/A | |
| ***Eleventh Ave @ 39th St*** | 1 | 11 | 14 | 4 | 4 | B | 11 | 14 | 103 | 5 | B | | | | 103 | 5 | B | |
| | 2 | 7 | 10 | 4 | 4 | B | 12 | 15 | 332 | 6 | B | | | | 332 | 6 | B | |
| | 3 | 9 | 12 | 1 | 4 | B | 9 | 12 | 15 | 4 | B | | | | 15 | 4 | B | |
| | 4 | 8 | 11 | 52 | 4 | B | 15 | 18 | 137 | 5 | B | | | | 137 | 5 | B | |
| | 5 | 7 | 10 | 2 | 4 | B | 12 | 15 | 382 | 6 | B | | | | 382 | 6 | B | |
| | 6 | 12 | 15 | 2 | 4 | B | 12 | 15 | 92 | 5 | B | | | | 92 | 5 | B | |
| | 7 | 10 | 13 | 53 | 4 | B | 0 | 0 | 0 | N/A | N/A | | | | 0 | N/A | N/A | |
| | 8 | 12 | 15 | 4 | 4 | B | 0 | 0 | 0 | N/A | N/A | | | | 0 | N/A | N/A | |
| ***Eleventh Ave @ 40th St*** | 1 | 12 | 15 | 82 | 4 | B | 12 | 15 | 191 | 5 | B | | | | 191 | 5 | B | |
| | 2 | 7 | 10 | 23 | 4 | B | 12 | 15 | 335 | 6 | B | | | | 335 | 6 | B | |
| | 3 | 10 | 13 | 0 | 4 | B | 14 | 18 | 164 | 5 | B | | | | 164 | 5 | B | |
| | 4 | 10 | 13 | 8 | 4 | B | 15 | 18 | 12 | 4 | B | | | | 12 | 4 | B | |
| | 5 | 7 | 10 | 18 | 4 | B | 12 | 15 | 343 | 6 | B | | | | 343 | 6 | B | |
| | 6 | 12 | 15 | 111 | 5 | B | 12 | 15 | 210 | 5 | B | | | | 210 | 5 | B | |
| | 7 | 10 | 13 | 1 | 4 | B | 0 | 0 | 0 | N/A | N/A | | | | 0 | N/A | N/A | |
| | 8 | 10 | 13 | 6 | 4 | B | 0 | 0 | 0 | N/A | N/A | | | | 0 | N/A | N/A | |
| ***Eleventh Ave @ 42nd St*** | 1 | 13 | 16 | 66 | 4 | B | 13 | 16 | 176 | 5 | B | | | | 176 | 5 | B | |
| | 2 | 13 | 16 | 14 | 4 | B | 13 | 16 | 109 | 5 | B | | | | 109 | 5 | B | |
| | 3 | 12 | 15 | 252 | 5 | B | 12 | 15 | 286 | 6 | B | | | | 286 | 6 | B | |
| | 4 | 12 | 15 | 152 | 5 | B | 12 | 15 | 584 | 7 | B | | | | 584 | 7 | B | |
| | 5 | 12 | 16 | 1 | 4 | B | 12 | 16 | 334 | 6 | B | | | | 334 | 6 | B | |
| | 6 | 12 | 15 | 87 | 4 | B | 12 | 15 | 136 | 5 | B | | | | 136 | 5 | B | |
| | 7 | 12 | 16 | 117 | 5 | B | 12 | 16 | 121 | 5 | B | | | | 121 | 5 | B | |
| | 8 | 12 | 16 | 204 | 5 | B | 12 | 16 | 286 | 6 | B | | | | 286 | 6 | B | |
| ***Tenth Ave @ 29th St*** | 1 | 12 | 15 | 87 | 4 | B | 12 | 15 | 314 | 6 | B | | | | 314 | 6 | B | |
| | 2 | 12 | 15 | 58 | 4 | B | 12 | 15 | 138 | 5 | B | | | | 138 | 5 | B | |
| | 3 | 10 | 13 | 61 | 4 | B | 10 | 13 | 85 | 5 | B | | | | 85 | 5 | B | |
| | 4 | 10 | 13 | 46 | 4 | B | 10 | 13 | 70 | 4 | B | | | | 70 | 4 | B | |
| | 5 | 12 | 15 | 53 | 4 | B | 12 | 15 | 118 | 5 | B | | | | 118 | 5 | B | |
| | 6 | 12 | 15 | 147 | 5 | B | 12 | 15 | 317 | 6 | B | | | | 317 | 6 | B | |
| | 7 | 10 | 13 | 54 | 4 | B | 10 | 13 | 66 | 4 | B | | | | 66 | 4 | B | |
| | 8 | 10 | 13 | 29 | 4 | B | 10 | 13 | 38 | 4 | B | | | | 38 | 4 | B | |
| ***Tenth Ave @ 30th St*** | 1 | 13 | 16 | 83 | 4 | B | 13 | 16 | 306 | 6 | B | | | | 306 | 6 | B | |
| | 2 | 12 | 15 | 70 | 4 | B | 12 | 15 | 194 | 5 | B | | | | 194 | 5 | B | |
| | 3 | 10 | 13 | 51 | 4 | B | 10 | 13 | 166 | 5 | B | | | | 166 | 5 | B | |
| | 4 | 12 | 15 | 38 | 4 | B | 12 | 15 | 81 | 4 | B | | | | 81 | 4 | B | |
| | 5 | 12 | 15 | 56 | 4 | B | 12 | 15 | 160 | 5 | B | | | | 160 | 5 | B | |
| | 6 | 12 | 15 | 106 | 5 | B | 12 | 15 | 357 | 6 | B | | | | 357 | 6 | B | |
| | 7 | 11 | 14 | 41 | 4 | B | 11 | 14 | 66 | 4 | B | | | | 66 | 4 | B | |
| | 8 | 11 | 14 | 43 | 4 | B | 11 | 14 | 255 | 6 | B | | | | 255 | 6 | B | |

# Appendix S.5.3

**Pedestrian Improvement Analysis - Sidewalks Level of Service**

**2025 Future Conditions (PM)**

| Intersection | Walkway Location | 2025 Future without the Proposed Action | | | | | 2025 Future with the Proposed Action | | | | | | 2025 Future with the Proposed Action (Improvement) | | | | | |
|---|---|---|---|---|---|---|---|---|---|---|---|---|---|---|---|---|---|---|
| | | Effective Walkway width | Actual walkway width | Sidewalk Volumes | Platoon Flow Rate (ped/min/ft) | Platoon Level of Service | Effective Walkway width | Actual walkway width | Sidewalk Volumes | Platoon Flow Rate (ped/min/ft) | Platoon Level of Service | Impact? | Proposed Effective Walkwa | Proposed Actual walkway width | Sidewalk Volumes | Platoon Flow Rate (ped/min/ft) | Platoon Level of Service | Still Impact? |
| ***Tenth Ave @ 31st St*** | 1 | 12 | 15 | 84 | 4 | B | 12 | 15 | 761 | 8 | C | | | | 761 | 8 | C | |
| | 2 | 12 | 15 | 62 | 4 | B | 12 | 15 | 204 | 5 | B | | | | 204 | 5 | B | |
| | 3 | 11 | 13 | 53 | 4 | B | 11 | 13 | 599 | 8 | C | | | | 599 | 8 | C | |
| | 4 | 11 | 13 | 19 | 4 | B | 11 | 13 | 120 | 5 | B | | | | 120 | 5 | B | |
| | 5 | 12 | 15 | 87 | 4 | B | 12 | 15 | 232 | 5 | B | | | | 232 | 5 | B | |
| | 6 | 12 | 15 | 97 | 5 | B | 12 | 15 | 326 | 6 | B | | | | 326 | 6 | B | |
| | 7 | 0 | 0 | 0 | N/A | N/A | 0 | 0 | 0 | N/A | N/A | | | | 0 | N/A | N/A | |
| | 8 | 0 | 0 | 0 | N/A | N/A | 0 | 0 | 0 | N/A | N/A | | | | 0 | N/A | N/A | |
| ***Tenth Ave @ 33rd St*** | 1 | 12 | 15 | 52 | 4 | B | 12 | 15 | 826 | 9 | C | | | | 826 | 9 | C | |
| | 2 | 12 | 15 | 60 | 4 | B | 12 | 15 | 732 | 8 | C | | | | 732 | 8 | C | |
| | 3 | 10 | 13 | 56 | 4 | B | 10 | 13 | 835 | 10 | C | | | | 835 | 10 | C | |
| | 4 | 10 | 13 | 138 | 5 | B | 10 | 13 | 1737 | 16 | E | Yes | | | 1737 | 16 | E | Yes |
| | 5 | 12 | 15 | 59 | 4 | B | 12 | 15 | 312 | 6 | B | | | | 312 | 6 | B | |
| | 6 | 12 | 15 | 65 | 4 | B | 12 | 15 | 919 | 9 | C | | | | 919 | 9 | C | |
| | 7 | 10 | 13 | 53 | 4 | B | 10 | 13 | 1319 | 13 | D | | | | 1319 | 13 | D | |
| | 8 | 10 | 13 | 64 | 4 | B | 15 | 18 | 834 | 8 | C | | | | 834 | 8 | C | |
| ***Tenth Ave @ 34th St*** | 1 | 12 | 15 | 62 | 4 | B | 12 | 15 | 765 | 8 | C | | | | 765 | 8 | C | |
| | 2 | 12 | 15 | 50 | 4 | B | 12 | 15 | 377 | 6 | B | | | | 377 | 6 | B | |
| | 3 | 17 | 20 | 136 | 5 | B | 17 | 20 | 627 | 6 | B | | | | 627 | 6 | B | |
| | 4 | 17 | 20 | 176 | 5 | B | 17 | 20 | 854 | 7 | B | | | | 854 | 7 | B | |
| | 5 | 12 | 15 | 86 | 4 | B | 12 | 15 | 515 | 7 | B | | | | 515 | 7 | B | |
| | 6 | 12 | 15 | 38 | 4 | B | 12 | 15 | 1029 | 10 | C | | | | 1029 | 10 | C | |
| | 7 | 17 | 20 | 142 | 5 | B | 26 | 30 | 657 | 6 | B | | | | 657 | 6 | B | |
| | 8 | 17 | 20 | 123 | 4 | B | 26 | 30 | 846 | 6 | B | | | | 846 | 6 | B | |
| ***Tenth Ave @ 35th St*** | 1 | 13 | 16 | 43 | 4 | B | 13 | 16 | 486 | 6 | B | | | | 486 | 6 | B | |
| | 2 | 13 | 15 | 76 | 4 | B | 13 | 15 | 326 | 6 | B | | | | 326 | 6 | B | |
| | 3 | 12 | 15 | 68 | 4 | B | 12 | 15 | 418 | 6 | B | | | | 418 | 6 | B | |
| | 4 | 7 | 9 | 1 | 4 | B | 7 | 9 | 385 | 8 | C | | | | 385 | 8 | C | |
| | 5 | 13 | 15 | 56 | 4 | B | 13 | 15 | 370 | 6 | B | | | | 370 | 6 | B | |
| | 6 | 11 | 15 | 43 | 4 | B | 11 | 15 | 698 | 8 | C | | | | 698 | 8 | C | |
| | 7 | 10 | 13 | 23 | 4 | B | 15 | 18 | 275 | 5 | B | | | | 275 | 5 | B | |
| | 8 | 12 | 14 | 47 | 4 | B | 20 | 24 | 486 | 6 | B | | | | 486 | 6 | B | |
| ***Tenth Ave @ 36th St*** | 1 | 12 | 15 | 38 | 4 | B | 12 | 15 | 333 | 6 | B | | | | 333 | 6 | B | |
| | 2 | 10 | 16 | 40 | 4 | B | 10 | 16 | 279 | 6 | B | | | | 279 | 6 | B | |
| | 3 | 9 | 12 | 20 | 4 | B | 9 | 12 | 292 | 6 | B | | | | 292 | 6 | B | |
| | 4 | 9 | 12 | 35 | 4 | B | 9 | 12 | 142 | 5 | B | | | | 142 | 5 | B | |
| | 5 | 12 | 15 | 45 | 4 | B | 12 | 15 | 281 | 6 | B | | | | 281 | 6 | B | |
| | 6 | 12 | 15 | 41 | 4 | B | 12 | 15 | 411 | 6 | B | | | | 411 | 6 | B | |
| | 7 | 9 | 12 | 25 | 4 | B | 15 | 18 | 162 | 5 | B | | | | 162 | 5 | B | |
| | 8 | 10 | 12 | 7 | 4 | B | 18 | 22 | 207 | 5 | B | | | | 207 | 5 | B | |
| ***Tenth Ave @ 37th St*** | 1 | 5 | 15 | 24 | 4 | B | 12 | 15 | 297 | 6 | B | | | | 297 | 6 | B | |
| | 2 | 5 | 15 | 35 | 4 | B | 5 | 15 | 312 | 8 | C | | | | 312 | 8 | C | |
| | 3 | 9 | 12 | 22 | 4 | B | 9 | 12 | 232 | 6 | B | | | | 232 | 6 | B | |
| | 4 | 9 | 12 | 19 | 4 | B | 9 | 12 | 171 | 5 | B | | | | 171 | 5 | B | |
| | 5 | 12 | 15 | 35 | 4 | B | 12 | 15 | 249 | 5 | B | | | | 249 | 5 | B | |
| | 6 | 12 | 15 | 21 | 4 | B | 12 | 15 | 342 | 6 | B | | | | 342 | 6 | B | |
| | 7 | 9 | 12 | 16 | 4 | B | 14 | 17 | 117 | 5 | B | | | | 117 | 5 | B | |
| | 8 | 9 | 12 | 21 | 4 | B | 18 | 22 | 249 | 5 | B | | | | 249 | 5 | B | |

# Appendix S.5.3

**Pedestrian Improvement Analysis - Sidewalks Level of Service**

**2025 Future Conditions (PM)**

| Intersection | Walkway Location | 2025 Future without the Proposed Action | | | | | 2025 Future with the Proposed Action | | | | | | 2025 Future with the Proposed Action (Improvement) | | | | | |
|---|---|---|---|---|---|---|---|---|---|---|---|---|---|---|---|---|---|---|
| | | Effective Walkway width | Actual walkway width | Sidewalk Volumes | Platoon Flow Rate (ped/min/ft) | Platoon Level of Service | Effective Walkway width | Actual walkway width | Sidewalk Volumes | Platoon Flow Rate (ped/min/ft) | Platoon Level of Service | Impact? | Proposed Effective Walkwa | Proposed Actual walkway width | Sidewalk Volumes | Platoon Flow Rate (ped/min/ft) | Platoon Level of Service | Still Impact? |
| ***Tenth Ave @ 38th St*** | 1 | 12 | 15 | 24 | 4 | B | 12 | 15 | 369 | 6 | B | | | | 369 | 6 | B | |
| | 2 | 12 | 15 | 26 | 4 | B | 12 | 15 | 280 | 6 | B | | | | 280 | 6 | B | |
| | 3 | 9 | 12 | 21 | 4 | B | 9 | 12 | 182 | 5 | B | | | | 182 | 5 | B | |
| | 4 | 9 | 12 | 18 | 4 | B | 9 | 12 | 160 | 5 | B | | | | 160 | 5 | B | |
| | 5 | 12 | 15 | 29 | 4 | B | 12 | 15 | 317 | 6 | B | | | | 317 | 6 | B | |
| | 6 | 12 | 15 | 22 | 4 | B | 12 | 15 | 315 | 6 | B | | | | 315 | 6 | B | |
| | 7 | 9 | 12 | 16 | 4 | B | 14 | 17 | 194 | 5 | B | | | | 194 | 5 | B | |
| | 8 | 9 | 12 | 36 | 4 | B | 18 | 22 | 271 | 5 | B | | | | 271 | 5 | B | |
| ***Tenth Ave @ 39th St*** | 1 | 12 | 15 | 17 | 4 | B | 12 | 15 | 421 | 6 | B | | | | 421 | 6 | B | |
| | 2 | 12 | 15 | 27 | 4 | B | 12 | 15 | 491 | 7 | B | | | | 491 | 7 | B | |
| | 3 | 9 | 12 | 32 | 4 | B | 9 | 12 | 108 | 5 | B | | | | 108 | 5 | B | |
| | 4 | 9 | 12 | 40 | 4 | B | 9 | 12 | 188 | 5 | B | | | | 188 | 5 | B | |
| | 5 | 12 | 15 | 36 | 4 | B | 12 | 15 | 273 | 6 | B | | | | 273 | 6 | B | |
| | 6 | 12 | 15 | 19 | 4 | B | 12 | 15 | 399 | 6 | B | | | | 399 | 6 | B | |
| | 7 | 10 | 13 | 37 | 4 | B | 15 | 18 | 249 | 5 | B | | | | 249 | 5 | B | |
| | 8 | 7 | 10 | 30 | 4 | B | 7 | 10 | 251 | 6 | B | | | | 251 | 6 | B | |
| ***Tenth Ave @ 40th St*** | 1 | 12 | 15 | 35 | 4 | B | 12 | 15 | 500 | 7 | B | | | | 500 | 7 | B | |
| | 2 | 12 | 15 | 55 | 4 | B | 12 | 15 | 689 | 8 | C | | | | 689 | 8 | C | |
| | 3 | 9 | 12 | 40 | 4 | B | 9 | 12 | 245 | 6 | B | | | | 245 | 6 | B | |
| | 4 | 9 | 12 | 12 | 4 | B | 9 | 12 | 50 | 4 | B | | | | 50 | 4 | B | |
| | 5 | 12 | 15 | 40 | 4 | B | 12 | 15 | 502 | 7 | B | | | | 502 | 7 | B | |
| | 6 | 12 | 15 | 36 | 4 | B | 12 | 15 | 438 | 6 | B | | | | 438 | 6 | B | |
| | 7 | 10 | 13 | 4 | 4 | B | 10 | 13 | 12 | 4 | B | | | | 12 | 4 | B | |
| | 8 | 10 | 13 | 16 | 4 | B | 14 | 18 | 114 | 5 | B | | | | 114 | 5 | B | |
| ***Tenth Ave @ 41st St*** | 1 | 12 | 15 | 39 | 4 | B | 12 | 15 | 256 | 5 | B | | | | 256 | 5 | B | |
| | 2 | 14 | 16 | 86 | 4 | B | 14 | 16 | 431 | 6 | B | | | | 431 | 6 | B | |
| | 3 | 8 | 10 | 83 | 5 | B | 8 | 10 | 120 | 5 | B | | | | 120 | 5 | B | |
| | 4 | 12 | 14 | 27 | 4 | B | 12 | 14 | 116 | 5 | B | | | | 116 | 5 | B | |
| | 5 | 13 | 16 | 67 | 4 | B | 13 | 16 | 1470 | 12 | D | | | | 1470 | 12 | D | |
| | 6 | 8 | 10 | 42 | 4 | B | 8 | 10 | 545 | 9 | C | | | | 545 | 9 | C | |
| | 7 | 13 | 17 | 12 | 4 | B | 13 | 17 | 352 | 6 | B | | | | 352 | 6 | B | |
| | 8 | 9 | 12 | 68 | 5 | B | 9 | 12 | 99 | 5 | B | | | | 99 | 5 | B | |
| ***Tenth Ave @ 42nd St*** | 1 | 17 | 20 | 70 | 4 | B | 17 | 20 | 171 | 5 | B | | | | 171 | 5 | B | |
| | 2 | 17 | 22 | 109 | 4 | B | 17 | 22 | 231 | 5 | B | | | | 231 | 5 | B | |
| | 3 | 18 | 21 | 372 | 5 | B | 18 | 21 | 440 | 6 | B | | | | 440 | 6 | B | |
| | 4 | 12 | 20 | 242 | 5 | B | 12 | 20 | 1038 | 10 | C | | | | 1038 | 10 | C | |
| | 5 | 8 | 16 | 65 | 5 | B | 8 | 16 | 346 | 7 | B | | | | 346 | 7 | B | |
| | 6 | 13 | 16 | 52 | 4 | B | 13 | 16 | 249 | 5 | B | | | | 249 | 5 | B | |
| | 7 | 13 | 15 | 169 | 5 | B | 13 | 15 | 688 | 8 | C | | | | 688 | 8 | C | |
| | 8 | 13 | 15 | 351 | 6 | B | 13 | 15 | 410 | 6 | B | | | | 410 | 6 | B | |
| ***Dyer @ 42nd St*** | 1 | 0 | 0 | 0 | N/A | N/A | 0 | 0 | 0 | N/A | N/A | | | | 0 | N/A | N/A | |
| | 2 | 0 | 0 | 0 | N/A | N/A | 0 | 0 | 0 | N/A | N/A | | | | 0 | N/A | N/A | |
| | 3 | 19 | 21 | 291 | 5 | B | 19 | 21 | 290 | 5 | B | | | | 290 | 5 | B | |
| | 4 | 18 | 20 | 139 | 5 | B | 18 | 20 | 129 | 4 | B | | | | 129 | 4 | B | |
| | 5 | 6 | 6 | 18 | 4 | B | 6 | 6 | 18 | 4 | B | | | | 18 | 4 | B | |
| | 6 | 2 | 4 | 4 | 4 | B | 2 | 4 | 4 | 4 | B | | | | 4 | 4 | B | |
| | 7 | 18 | 20 | 128 | 4 | B | 18 | 20 | 118 | 4 | B | | | | 118 | 4 | B | |
| | 8 | 19 | 21 | 241 | 5 | B | 19 | 21 | 240 | 5 | B | | | | 240 | 5 | B | |

# Appendix S.5.3

**Pedestrian Improvement Analysis - Sidewalks Level of Service**

**2025 Future Conditions (PM)**

| Intersection | Walkway Location | 2025 Future without the Proposed Action | | | | | 2025 Future with the Proposed Action | | | | | | 2025 Future with the Proposed Action (Improvement) | | | | | |
|---|---|---|---|---|---|---|---|---|---|---|---|---|---|---|---|---|---|---|
| | | Effective Walkway width | Actual walkway width | Sidewalk Volumes | Platoon Flow Rate (ped/min/ft) | Platoon Level of Service | Effective Walkway width | Actual walkway width | Sidewalk Volumes | Platoon Flow Rate (ped/min/ft) | Platoon Level of Service | Impact? | Proposed Effective Walkwa | Proposed Actual walkway width | Sidewalk Volumes | Platoon Flow Rate (ped/min/ft) | Platoon Level of Service | Still Impact? |
| ***Ninth Ave @ 30th St*** | 1 | 14 | 16 | 126 | 5 | B | 14 | 16 | 177 | 5 | B | | | | 177 | 5 | B | |
| | 2 | 8 | 15 | 234 | 6 | B | 8 | 15 | 298 | 6 | B | | | | 298 | 6 | B | |
| | 3 | 6 | 13 | 59 | 5 | B | 6 | 13 | 101 | 5 | B | | | | 101 | 5 | B | |
| | 4 | 10 | 13 | 79 | 5 | B | 10 | 13 | 116 | 5 | B | | | | 116 | 5 | B | |
| | 5 | 13 | 16 | 158 | 5 | B | 13 | 16 | 257 | 5 | B | | | | 257 | 5 | B | |
| | 6 | 13 | 16 | 136 | 5 | B | 13 | 16 | 214 | 5 | B | | | | 214 | 5 | B | |
| | 7 | 11 | 14 | 125 | 5 | B | 11 | 14 | 159 | 5 | B | | | | 159 | 5 | B | |
| | 8 | 10 | 12 | 60 | 4 | B | 10 | 12 | 168 | 5 | B | | | | 168 | 5 | B | |
| ***Ninth Ave @ 31st St*** | 1 | 12 | 15 | 148 | 5 | B | 17 | 20 | 469 | 6 | B | | | | 469 | 6 | B | |
| | 2 | 10 | 13 | 99 | 5 | B | 10 | 13 | 333 | 6 | B | | | | 333 | 6 | B | |
| | 3 | 10 | 13 | 383 | 7 | B | 10 | 13 | 470 | 7 | B | | | | 470 | 7 | B | |
| | 4 | 10 | 13 | 132 | 5 | B | 10 | 13 | 198 | 5 | B | | | | 198 | 5 | B | |
| | 5 | 12 | 15 | 265 | 5 | B | 12 | 15 | 359 | 6 | B | | | | 359 | 6 | B | |
| | 6 | 12 | 15 | 111 | 5 | B | 12 | 15 | 190 | 5 | B | | | | 190 | 5 | B | |
| | 7 | 10 | 13 | 72 | 4 | B | 10 | 13 | 168 | 5 | B | | | | 168 | 5 | B | |
| | 8 | 10 | 13 | 121 | 5 | B | 10 | 13 | 689 | 9 | C | | | | 689 | 9 | C | |
| ***Ninth Ave @ 33rd St*** | 1 | 12 | 15 | 221 | 5 | B | 12 | 15 | 467 | 7 | B | | | | 467 | 7 | B | |
| | 2 | 12 | 15 | 238 | 5 | B | 12 | 15 | 447 | 6 | B | | | | 447 | 6 | B | |
| | 3 | 10 | 13 | 174 | 5 | B | 10 | 13 | 403 | 7 | B | | | | 403 | 7 | B | |
| | 4 | 10 | 13 | 736 | 9 | C | 10 | 13 | 1191 | 12 | D | | | | 1191 | 12 | D | |
| | 5 | 12 | 15 | 62 | 4 | B | 12 | 15 | 777 | 8 | C | | | | 777 | 8 | C | |
| | 6 | 12 | 15 | 281 | 6 | B | 17 | 20 | 1140 | 8 | C | | | | 1140 | 8 | C | |
| | 7 | 10 | 13 | 384 | 7 | B | 15 | 18 | 1830 | 12 | D | | | | 1830 | 12 | D | |
| | 8 | 10 | 13 | 55 | 4 | B | 10 | 13 | 825 | 10 | C | | | | 825 | 10 | C | |
| ***Ninth Ave @ 34th St*** | 1 | 11 | 15 | 294 | 6 | B | 11 | 15 | 456 | 7 | B | | | | 456 | 7 | B | |
| | 2 | 12 | 15 | 357 | 6 | B | 12 | 15 | 475 | 7 | B | | | | 475 | 7 | B | |
| | 3 | 19 | 23 | 409 | 5 | B | 19 | 23 | 934 | 7 | B | | | | 934 | 7 | B | |
| | 4 | 19 | 23 | 419 | 5 | B | 19 | 23 | 863 | 7 | B | | | | 863 | 7 | B | |
| | 5 | 12 | 15 | 390 | 6 | B | 12 | 15 | 608 | 7 | B | | | | 608 | 7 | B | |
| | 6 | 12 | 15 | 315 | 6 | B | 12 | 15 | 568 | 7 | B | | | | 568 | 7 | B | |
| | 7 | 16 | 20 | 292 | 5 | B | 16 | 20 | 973 | 8 | C | | | | 973 | 8 | C | |
| | 8 | 15 | 20 | 234 | 5 | B | 15 | 20 | 709 | 7 | B | | | | 709 | 7 | B | |
| ***Ninth Ave @ 37th St*** | 1 | 12 | 15 | 315 | 6 | B | 12 | 15 | 432 | 6 | B | | | | 432 | 6 | B | |
| | 2 | 12 | 15 | 272 | 6 | B | 12 | 15 | 386 | 6 | B | | | | 386 | 6 | B | |
| | 3 | 9 | 12 | 137 | 5 | B | 9 | 12 | 265 | 6 | B | | | | 265 | 6 | B | |
| | 4 | 9 | 12 | 71 | 5 | B | 9 | 12 | 183 | 5 | B | | | | 183 | 5 | B | |
| | 5 | 10 | 15 | 309 | 6 | B | 10 | 15 | 444 | 7 | B | | | | 444 | 7 | B | |
| | 6 | 12 | 15 | 279 | 6 | B | 12 | 15 | 401 | 6 | B | | | | 401 | 6 | B | |
| | 7 | 6 | 12 | 73 | 5 | B | 6 | 12 | 219 | 6 | B | | | | 219 | 6 | B | |
| | 8 | 9 | 12 | 90 | 5 | B | 9 | 12 | 284 | 6 | B | | | | 284 | 6 | B | |
| ***Ninth Ave @ 38th St*** | 1 | 10 | 15 | 129 | 5 | B | 10 | 15 | 191 | 5 | B | | | | 191 | 5 | B | |
| | 2 | 8 | 15 | 130 | 5 | B | 8 | 15 | 318 | 7 | B | | | | 318 | 7 | B | |
| | 3 | 8 | 11 | 95 | 5 | B | 8 | 11 | 158 | 5 | B | | | | 158 | 5 | B | |
| | 4 | 8 | 11 | 29 | 4 | B | 8 | 11 | 145 | 5 | B | | | | 145 | 5 | B | |
| | 5 | 10 | 15 | 193 | 5 | B | 10 | 15 | 295 | 6 | B | | | | 295 | 6 | B | |
| | 6 | 12 | 15 | 98 | 5 | B | 12 | 15 | 220 | 5 | B | | | | 220 | 5 | B | |
| | 7 | 8 | 11 | 24 | 4 | B | 8 | 11 | 150 | 5 | B | | | | 150 | 5 | B | |
| | 8 | 8 | 11 | 41 | 4 | B | 8 | 11 | 186 | 6 | B | | | | 186 | 6 | B | |

# Appendix S.5.3

**Pedestrian Improvement Analysis - Sidewalks Level of Service**

**2025 Future Conditions (PM)**

| Intersection | Walkway Location | 2025 Future without the Proposed Action | | | | | 2025 Future with the Proposed Action | | | | | | 2025 Future with the Proposed Action (Improvement) | | | | | |
|---|---|---|---|---|---|---|---|---|---|---|---|---|---|---|---|---|---|---|
| | | Effective Walkway width | Actual walkway width | Sidewalk Volumes | Platoon Flow Rate (ped/min/ft) | Platoon Level of Service | Effective Walkway width | Actual walkway width | Sidewalk Volumes | Platoon Flow Rate (ped/min/ft) | Platoon Level of Service | Impact? | Proposed Effective Walkwa | Proposed Actual walkway width | Sidewalk Volumes | Platoon Flow Rate (ped/min/ft) | Platoon Level of Service | Still Impact? |
| ***Ninth Ave @ 39th St*** | 1 | 8 | 15 | 153 | 5 | B | 8 | 15 | 257 | 6 | B | | | | 257 | 6 | B | |
| | 2 | 11 | 15 | 305 | 6 | B | 11 | 15 | 539 | 7 | B | | | | 539 | 7 | B | |
| | 3 | 9 | 12 | 81 | 5 | B | 9 | 12 | 109 | 5 | B | | | | 109 | 5 | B | |
| | 4 | 9 | 12 | 87 | 5 | B | 9 | 12 | 156 | 5 | B | | | | 156 | 5 | B | |
| | 5 | 10 | 15 | 310 | 6 | B | 10 | 15 | 478 | 7 | B | | | | 478 | 7 | B | |
| | 6 | 12 | 15 | 163 | 5 | B | 12 | 15 | 197 | 5 | B | | | | 197 | 5 | B | |
| | 7 | 9 | 12 | 47 | 4 | B | 9 | 12 | 181 | 5 | B | | | | 181 | 5 | B | |
| | 8 | 9 | 12 | 55 | 4 | B | 9 | 12 | 131 | 5 | B | | | | 131 | 5 | B | |
| ***Ninth Ave @ 42nd St*** | 1 | 13 | 16 | 376 | 6 | B | 13 | 16 | 406 | 6 | B | | | | 406 | 6 | B | |
| | 2 | 8 | 10 | 359 | 7 | B | 8 | 10 | 426 | 8 | C | | | | 426 | 8 | C | |
| | 3 | 8 | 11 | 570 | 9 | C | 8 | 11 | 713 | 10 | C | | | | 713 | 10 | C | |
| | 4 | 12 | 19 | 464 | 7 | B | 12 | 19 | 651 | 8 | C | | | | 651 | 8 | C | |
| | 5 | 8 | 14 | 374 | 7 | B | 8 | 14 | 440 | 8 | C | | | | 440 | 8 | C | |
| | 6 | 8 | 15 | 199 | 6 | B | 8 | 15 | 249 | 6 | B | | | | 249 | 6 | B | |
| | 7 | 13 | 20 | 297 | 6 | B | 13 | 20 | 605 | 7 | B | | | | 605 | 7 | B | |
| | 8 | 18 | 21 | 478 | 6 | B | 18 | 21 | 536 | 6 | B | | | | 536 | 6 | B | |
| ***Eighth Ave @ 30th St*** | 1 | 11 | 14 | 301 | 6 | B | 11 | 14 | 410 | 6 | B | | | | 410 | 6 | B | |
| | 2 | 11 | 15 | 453 | 7 | B | 11 | 15 | 730 | 8 | C | | | | 730 | 8 | C | |
| | 3 | 9 | 13 | 160 | 5 | B | 9 | 13 | 238 | 6 | B | | | | 238 | 6 | B | |
| | 4 | 11 | 14 | 63 | 4 | B | 11 | 14 | 92 | 5 | B | | | | 92 | 5 | B | |
| | 5 | 12 | 15 | 308 | 6 | B | 12 | 15 | 497 | 7 | B | | | | 497 | 7 | B | |
| | 6 | 11 | 14 | 246 | 5 | B | 11 | 14 | 328 | 6 | B | | | | 328 | 6 | B | |
| | 7 | 10 | 14 | 71 | 4 | B | 10 | 14 | 123 | 5 | B | | | | 123 | 5 | B | |
| | 8 | 10 | 13 | 84 | 5 | B | 10 | 13 | 120 | 5 | B | | | | 120 | 5 | B | |
| ***Eighth Ave @ 31st St*** | 1 | 12 | 16 | 313 | 6 | B | 12 | 16 | 367 | 6 | B | | | | 367 | 6 | B | |
| | 2 | 18 | 24 | 230 | 5 | B | 17 | 20 | 455 | 6 | B | | | | 455 | 6 | B | |
| | 3 | 35 | 49 | 451 | 5 | B | 15 | 18 | 673 | 7 | B | | | | 673 | 7 | B | |
| | 4 | 10 | 14 | 55 | 4 | B | 10 | 14 | 133 | 5 | B | | | | 133 | 5 | B | |
| | 5 | 12 | 15 | 179 | 5 | B | 12 | 15 | 466 | 7 | B | | | | 466 | 7 | B | |
| | 6 | 12 | 15 | 181 | 5 | B | 12 | 15 | 308 | 6 | B | | | | 308 | 6 | B | |
| | 7 | 10 | 13 | 138 | 5 | B | 10 | 13 | 197 | 5 | B | | | | 197 | 5 | B | |
| | 8 | 21 | 24 | 381 | 5 | B | 21 | 24 | 460 | 5 | B | | | | 460 | 5 | B | |
| ***Eighth Ave @ 33rd St*** | 1 | 12 | 15 | 1216 | 11 | D | 12 | 15 | 1343 | 11 | D | | | | 1343 | 11 | D | |
| | 2 | 12 | 19 | 487 | 7 | B | 12 | 19 | 1044 | 10 | C | | | | 1044 | 10 | C | |
| | 3 | 10 | 17 | 457 | 7 | B | 10 | 17 | 596 | 8 | C | | | | 596 | 8 | C | |
| | 4 | 30 | 43 | 883 | 6 | B | 15 | 18 | 1277 | 10 | C | | | | 1277 | 10 | C | |
| | 5 | 30 | 43 | 559 | 5 | B | 17 | 20 | 1061 | 8 | C | | | | 1061 | 8 | C | |
| | 6 | 12 | 16 | 423 | 6 | B | 12 | 16 | 477 | 7 | B | | | | 477 | 7 | B | |
| | 7 | 13 | 24 | 1200 | 10 | C | 13 | 24 | 1416 | 11 | D | | | | 1416 | 11 | D | |
| | 8 | 7 | 14 | 375 | 8 | C | 7 | 14 | 634 | 10 | C | | | | 634 | 10 | C | |
| ***Eighth Ave @ 34th St*** | 1 | 11 | 15 | 680 | 8 | C | 11 | 15 | 853 | 9 | C | | | | 853 | 9 | C | |
| | 2 | 11 | 15 | 318 | 6 | B | 11 | 15 | 524 | 7 | B | | | | 524 | 7 | B | |
| | 3 | 19 | 22 | 508 | 6 | B | 19 | 22 | 590 | 6 | B | | | | 590 | 6 | B | |
| | 4 | 19 | 22 | 358 | 5 | B | 19 | 22 | 519 | 6 | B | | | | 519 | 6 | B | |
| | 5 | 12 | 15 | 284 | 6 | B | 12 | 15 | 893 | 9 | C | | | | 893 | 9 | C | |
| | 6 | 11 | 15 | 812 | 9 | C | 11 | 15 | 933 | 10 | C | | | | 933 | 10 | C | |
| | 7 | 12 | 22 | 263 | 5 | B | 12 | 22 | 691 | 8 | C | | | | 691 | 8 | C | |
| | 8 | 18 | 22 | 695 | 7 | B | 18 | 22 | 1204 | 8 | C | | | | 1204 | 8 | C | |

# Appendix S.5.3

**Pedestrian Improvement Analysis - Sidewalks Level of Service**

**2025 Future Conditions (PM)**

| Intersection | Walkway Location | 2025 Future without the Proposed Action | | | | | 2025 Future with the Proposed Action | | | | | | 2025 Future with the Proposed Action (Improvement) | | | | | |
|---|---|---|---|---|---|---|---|---|---|---|---|---|---|---|---|---|---|---|
| | | Effective Walkway width | Actual walkway width | Sidewalk Volumes | Platoon Flow Rate (ped/min/ft) | Platoon Level of Service | Effective Walkway width | Actual walkway width | Sidewalk Volumes | Platoon Flow Rate (ped/min/ft) | Platoon Level of Service | Impact? | Proposed Effective Walkwa | Proposed Actual walkway width | Sidewalk Volumes | Platoon Flow Rate (ped/min/ft) | Platoon Level of Service | Still Impact? |
| ***Eighth Ave @ 37th St*** | 1 | 8 | 15 | 658 | 9 | C | 8 | 15 | 732 | 10 | C | | | | 732 | 10 | C | |
| | 2 | 12 | 15 | 807 | 8 | C | 12 | 15 | 865 | 9 | C | | | | 865 | 9 | C | |
| | 3 | 9 | 12 | 141 | 5 | B | 9 | 12 | 176 | 5 | B | | | | 176 | 5 | B | |
| | 4 | 6 | 12 | 131 | 5 | B | 6 | 12 | 168 | 6 | B | | | | 168 | 6 | B | |
| | 5 | 9 | 15 | 573 | 8 | C | 9 | 15 | 642 | 9 | C | | | | 642 | 9 | C | |
| | 6 | 9 | 15 | 870 | 10 | C | 9 | 15 | 928 | 11 | D | | | | 928 | 11 | D | |
| | 7 | 5 | 12 | 165 | 6 | B | 5 | 12 | 257 | 7 | B | | | | 257 | 7 | B | |
| | 8 | 10 | 13 | 79 | 5 | B | 10 | 13 | 175 | 5 | B | | | | 175 | 5 | B | |
| ***Eighth Ave @ 38th St*** | 1 | 8 | 15 | 723 | 10 | C | 8 | 15 | 824 | 11 | D | | | | 824 | 11 | D | |
| | 2 | 10 | 15 | 458 | 7 | B | 10 | 15 | 535 | 8 | C | | | | 535 | 8 | C | |
| | 3 | 5 | 12 | 108 | 5 | B | 5 | 12 | 152 | 6 | B | | | | 152 | 6 | B | |
| | 4 | 9 | 12 | 46 | 4 | B | 9 | 12 | 82 | 5 | B | | | | 82 | 5 | B | |
| | 5 | 8 | 15 | 743 | 10 | C | 8 | 15 | 792 | 11 | D | | | | 792 | 11 | D | |
| | 6 | 10 | 15 | 635 | 8 | C | 10 | 15 | 701 | 9 | C | | | | 701 | 9 | C | |
| | 7 | 8 | 11 | 5 | 4 | B | 8 | 11 | 161 | 5 | B | | | | 161 | 5 | B | |
| | 8 | 8 | 11 | 51 | 4 | B | 8 | 11 | 98 | 5 | B | | | | 98 | 5 | B | |
| ***Eighth Ave @ 39th St*** | 1 | 12 | 15 | 1114 | 10 | C | 12 | 15 | 1206 | 11 | D | | | | 1206 | 11 | D | |
| | 2 | 11 | 15 | 1301 | 12 | D | 11 | 15 | 1387 | 12 | D | | | | 1387 | 12 | D | |
| | 3 | 8 | 12 | 174 | 5 | B | 8 | 12 | 190 | 6 | B | | | | 190 | 6 | B | |
| | 4 | 9 | 12 | 242 | 6 | B | 9 | 12 | 276 | 6 | B | | | | 276 | 6 | B | |
| | 5 | 12 | 15 | 892 | 9 | C | 12 | 15 | 964 | 9 | C | | | | 964 | 9 | C | |
| | 6 | 12 | 15 | 1217 | 11 | D | 12 | 15 | 1314 | 11 | D | | | | 1314 | 11 | D | |
| | 7 | 9 | 12 | 130 | 5 | B | 9 | 12 | 223 | 6 | B | | | | 223 | 6 | B | |
| | 8 | 9 | 12 | 163 | 5 | B | 9 | 12 | 174 | 5 | B | | | | 174 | 5 | B | |
| ***Eighth Ave @ 42nd St*** | 1 | 7 | 15 | 1806 | 21 | E | 7 | 15 | 1803 | 21 | E | | | | 1803 | 21 | E | |
| | 2 | 16 | 16 | 819 | 7 | B | 16 | 16 | 826 | 7 | B | | | | 826 | 7 | B | |
| | 3 | 15 | 23 | 604 | 7 | B | 15 | 23 | 687 | 7 | B | | | | 687 | 7 | B | |
| | 4 | 14 | 16 | 1950 | 13 | D | 14 | 16 | 2016 | 14 | D | | | | 2016 | 14 | D | |
| | 5 | 7 | 12 | 1235 | 16 | E | 7 | 12 | 1237 | 16 | E | | | | 1237 | 16 | E | |
| | 6 | 12 | 29 | 1878 | 14 | D | 12 | 29 | 1919 | 15 | D | | | | 1919 | 15 | D | |
| | 7 | 12 | 34 | 896 | 9 | C | 12 | 34 | 1114 | 10 | C | | | | 1114 | 10 | C | |
| | 8 | 12 | 20 | 1048 | 10 | C | 12 | 20 | 1182 | 11 | D | | | | 1182 | 11 | D | |
| ***Seventh Ave @ 31st St*** | 1 | 19 | 23 | 781 | 7 | B | 19 | 23 | 855 | 7 | B | | | | 855 | 7 | B | |
| | 2 | 19 | 23 | 746 | 7 | B | 19 | 23 | 758 | 7 | B | | | | 758 | 7 | B | |
| | 3 | 10 | 13 | 803 | 9 | C | 10 | 13 | 916 | 10 | C | | | | 916 | 10 | C | |
| | 4 | 10 | 13 | 609 | 8 | C | 10 | 13 | 625 | 8 | C | | | | 625 | 8 | C | |
| | 5 | 17 | 20 | 688 | 7 | B | 17 | 20 | 762 | 7 | B | | | | 762 | 7 | B | |
| | 6 | 16 | 20 | 560 | 6 | B | 16 | 20 | 597 | 6 | B | | | | 597 | 6 | B | |
| | 7 | 10 | 13 | 446 | 7 | B | 10 | 13 | 465 | 7 | B | | | | 465 | 7 | B | |
| | 8 | 15 | 18 | 639 | 7 | B | 15 | 18 | 794 | 8 | C | | | | 794 | 8 | C | |
| ***Seventh Ave @ 33rd St*** | 1 | 16 | 20 | 674 | 7 | B | 16 | 20 | 830 | 7 | B | | | | 830 | 7 | B | |
| | 2 | 15 | 20 | 740 | 7 | B | 15 | 20 | 768 | 7 | B | | | | 768 | 7 | B | |
| | 3 | 7 | 13 | 689 | 11 | D | 7 | 13 | 806 | 12 | D | | | | 806 | 12 | D | |
| | 4 | 10 | 13 | 733 | 9 | C | 10 | 13 | 865 | 10 | C | | | | 865 | 10 | C | |
| | 5 | 15 | 20 | 564 | 7 | B | 15 | 20 | 574 | 7 | B | | | | 574 | 7 | B | |
| | 6 | 37 | 40 | 754 | 5 | B | 37 | 40 | 820 | 5 | B | | | | 820 | 5 | B | |
| | 7 | 37 | 40 | 887 | 6 | B | 37 | 40 | 1204 | 6 | B | | | | 1204 | 6 | B | |
| | 8 | 9 | 15 | 648 | 9 | C | 9 | 15 | 708 | 9 | C | | | | 708 | 9 | C | |

# Appendix S.5.3

**Pedestrian Improvement Analysis - Sidewalks Level of Service**

**2025 Future Conditions (PM)**

| Intersection | Walkway Location | 2025 Future without the Proposed Action | | | | | 2025 Future with the Proposed Action | | | | | | 2025 Future with the Proposed Action (Improvement) | | | | | |
|---|---|---|---|---|---|---|---|---|---|---|---|---|---|---|---|---|---|---|
| | | Effective Walkway width | Actual walkway width | Sidewalk Volumes | Platoon Flow Rate (ped/min/ft) | Platoon Level of Service | Effective Walkway width | Actual walkway width | Sidewalk Volumes | Platoon Flow Rate (ped/min/ft) | Platoon Level of Service | Impact? | Proposed Effective Walkwa | Proposed Actual walkway width | Sidewalk Volumes | Platoon Flow Rate (ped/min/ft) | Platoon Level of Service | Still Impact? |
| ***Seventh Ave @ 34th St*** | 1 | 17 | 20 | 1113 | 8 | C | 17 | 20 | 1186 | 9 | C | | | | 1186 | 9 | C | |
| | 2 | 17 | 20 | 1102 | 8 | C | 17 | 20 | 1130 | 8 | C | | | | 1130 | 8 | C | |
| | 3 | 20 | 23 | 1074 | 8 | C | 20 | 23 | 1124 | 8 | C | | | | 1124 | 8 | C | |
| | 4 | 20 | 23 | 866 | 7 | B | 20 | 23 | 948 | 7 | B | | | | 948 | 7 | B | |
| | 5 | 17 | 20 | 922 | 8 | C | 17 | 20 | 944 | 8 | C | | | | 944 | 8 | C | |
| | 6 | 17 | 20 | 836 | 7 | B | 17 | 20 | 987 | 8 | C | | | | 987 | 8 | C | |
| | 7 | 20 | 23 | 1015 | 7 | B | 20 | 23 | 1158 | 8 | C | | | | 1158 | 8 | C | |
| | 8 | 20 | 23 | 1214 | 8 | C | 20 | 23 | 1285 | 8 | C | | | | 1285 | 8 | C | |
| ***Sixth Ave @ 33rd St*** | 1 | 26 | 34 | 1194 | 7 | B | 26 | 34 | 1204 | 7 | B | | | | 1204 | 7 | B | |
| | 2 | 25 | 28 | 643 | 6 | B | 25 | 28 | 708 | 6 | B | | | | 708 | 6 | B | |
| | 3 | 10 | 13 | 636 | 8 | C | 10 | 13 | 680 | 9 | C | | | | 680 | 9 | C | |
| | 4 | 10 | 13 | 764 | 9 | C | 10 | 13 | 809 | 9 | C | | | | 809 | 9 | C | |
| | 5 | 24 | 27 | 604 | 6 | B | 24 | 27 | 751 | 6 | B | | | | 751 | 6 | B | |
| | 6 | 17 | 24 | 1407 | 10 | C | 17 | 24 | 1570 | 10 | C | | | | 1570 | 10 | C | |
| | 7 | 10 | 13 | 994 | 11 | D | 10 | 13 | 1118 | 11 | D | | | | 1118 | 11 | D | |
| | 8 | 10 | 13 | 501 | 7 | B | 10 | 13 | 559 | 8 | C | | | | 559 | 8 | C | |
| ***Sixth Ave @ 34th St*** | 1 | 0 | 0 | 0 | N/A | N/A | 0 | 0 | 0 | N/A | N/A | | | | 0 | N/A | N/A | |
| | 2 | 10 | 17 | 1620 | 15 | D | 10 | 17 | 1684 | 15 | D | | | | 1684 | 15 | D | |
| | 3 | 20 | 23 | 1557 | 9 | C | 20 | 23 | 1601 | 9 | C | | | | 1601 | 9 | C | |
| | 4 | 18 | 23 | 1130 | 8 | C | 18 | 23 | 1174 | 8 | C | | | | 1174 | 8 | C | |
| | 5 | 14 | 17 | 1033 | 9 | C | 14 | 17 | 1097 | 9 | C | | | | 1097 | 9 | C | |
| | 6 | 0 | 0 | 0 | N/A | N/A | 0 | 0 | 0 | N/A | N/A | | | | 0 | N/A | N/A | |
| | 7 | 0 | 0 | 0 | N/A | N/A | 0 | 0 | 0 | N/A | N/A | | | | 0 | N/A | N/A | |
| | 8 | 0 | 0 | 0 | N/A | N/A | 0 | 0 | 0 | N/A | N/A | | | | 0 | N/A | N/A | |
| ***Broadway @ 34th St*** | 1 | 25 | 30 | 1938 | 9 | C | 25 | 30 | 1975 | 9 | C | | | | 1975 | 9 | C | |
| | 2 | 0 | 0 | 0 | N/A | N/A | 0 | 0 | 0 | N/A | N/A | | | | 0 | N/A | N/A | |
| | 3 | 0 | 0 | 0 | N/A | N/A | 0 | 0 | 0 | N/A | N/A | | | | 0 | N/A | N/A | |
| | 4 | 0 | 0 | 0 | N/A | N/A | 0 | 0 | 0 | N/A | N/A | | | | 0 | N/A | N/A | |
| | 5 | 0 | 0 | 0 | N/A | N/A | 0 | 0 | 0 | N/A | N/A | | | | 0 | N/A | N/A | |
| | 6 | 25 | 30 | 1893 | 9 | C | 25 | 30 | 1957 | 9 | C | | | | 1957 | 9 | C | |
| | 7 | 18 | 23 | 1921 | 11 | D | 18 | 23 | 1965 | 11 | D | | | | 1965 | 11 | D | |
| | 8 | 18 | 23 | 2107 | 12 | D | 18 | 23 | 2179 | 12 | D | | | | 2179 | 12 | D | |
| ***Blvd @ 33rd St*** | 1 | 0 | 0 | 0 | N/A | N/A | 15 | 15 | 2492 | 15 | D | | | | 2492 | 15 | D | |
| | 2 | 0 | 0 | 0 | N/A | N/A | 15 | 18 | 361 | 6 | B | | | | 361 | 6 | B | |
| | 3 | 0 | 0 | 0 | N/A | N/A | 15 | 18 | 1013 | 9 | C | | | | 1013 | 9 | C | |
| | 4 | 0 | 0 | 0 | N/A | N/A | 10 | 13 | 811 | 9 | C | | | | 811 | 9 | C | |
| | 5 | 0 | 0 | 0 | N/A | N/A | 0 | 0 | 0 | N/A | N/A | | | | 0 | N/A | N/A | |
| | 6 | 0 | 0 | 0 | N/A | N/A | 0 | 0 | 0 | N/A | N/A | | | | 0 | N/A | N/A | |
| | 7 | 0 | 0 | 0 | N/A | N/A | 10 | 13 | 304 | 6 | B | | | | 304 | 6 | B | |
| | 8 | 0 | 0 | 0 | N/A | N/A | 15 | 18 | 295 | 5 | B | | | | 295 | 5 | B | |
| ***Blvd @ 34th St*** | 1 | 0 | 0 | 0 | N/A | N/A | 15 | 18 | 1182 | 9 | C | | | | 1182 | 9 | C | |
| | 2 | 0 | 0 | 0 | N/A | N/A | 15 | 18 | 671 | 7 | B | | | | 671 | 7 | B | |
| | 3 | 0 | 0 | 0 | N/A | N/A | 26 | 30 | 648 | 6 | B | | | | 648 | 6 | B | |
| | 4 | 0 | 0 | 0 | N/A | N/A | 26 | 30 | 527 | 5 | B | | | | 527 | 5 | B | |
| | 5 | 0 | 0 | 0 | N/A | N/A | 15 | 18 | 764 | 7 | B | | | | 764 | 7 | B | |
| | 6 | 0 | 0 | 0 | N/A | N/A | 15 | 18 | 434 | 6 | B | | | | 434 | 6 | B | |
| | 7 | 0 | 0 | 0 | N/A | N/A | 26 | 30 | 577 | 5 | B | | | | 577 | 5 | B | |
| | 8 | 0 | 0 | 0 | N/A | N/A | 26 | 30 | 367 | 5 | B | | | | 367 | 5 | B | |

# Appendix S.5.3

**Pedestrian Improvement Analysis - Sidewalks Level of Service**

**2025 Future Conditions (PM)**

| Intersection | Walkway Location | 2025 Future without the Proposed Action | | | | | 2025 Future with the Proposed Action | | | | | | 2025 Future with the Proposed Action (Improvement) | | | | | |
|---|---|---|---|---|---|---|---|---|---|---|---|---|---|---|---|---|---|---|
| | | Effective Walkway width | Actual walkway width | Sidewalk Volumes | Platoon Flow Rate (ped/min/ft) | Platoon Level of Service | Effective Walkway width | Actual walkway width | Sidewalk Volumes | Platoon Flow Rate (ped/min/ft) | Platoon Level of Service | Impact? | Proposed Effective Walkwa | Proposed Actual walkway width | Sidewalk Volumes | Platoon Flow Rate (ped/min/ft) | Platoon Level of Service | Still Impact? |
| ***N.Blvd @ 35th St*** | 1 | 0 | 0 | 0 | N/A | N/A | 0 | 0 | 0 | N/A | N/A | | | | 0 | N/A | N/A | |
| | 2 | 0 | 0 | 0 | N/A | N/A | 15 | 18 | 499 | 6 | B | | | | 499 | 6 | B | |
| | 3 | 0 | 0 | 0 | N/A | N/A | 20 | 24 | 442 | 5 | B | | | | 442 | 5 | B | |
| | 4 | 0 | 0 | 0 | N/A | N/A | 15 | 18 | 316 | 5 | B | | | | 316 | 5 | B | |
| | 5 | 0 | 0 | 0 | N/A | N/A | 15 | 18 | 626 | 7 | B | | | | 626 | 7 | B | |
| | 6 | 0 | 0 | 0 | N/A | N/A | 15 | 18 | 1306 | 10 | C | | | | 1306 | 10 | C | |
| | 7 | 0 | 0 | 0 | N/A | N/A | 15 | 18 | 75 | 4 | B | | | | 75 | 4 | B | |
| | 8 | 0 | 0 | 0 | N/A | N/A | 0 | 0 | 0 | N/A | N/A | | | | 0 | N/A | N/A | |
| ***N.Blvd @ 36th St*** | 1 | 0 | 0 | 0 | N/A | N/A | 0 | 0 | 0 | N/A | N/A | | | | 0 | N/A | N/A | |
| | 2 | 0 | 0 | 0 | N/A | N/A | 15 | 18 | 305 | 5 | B | | | | 305 | 5 | B | |
| | 3 | 0 | 0 | 0 | N/A | N/A | 18 | 22 | 170 | 5 | B | | | | 170 | 5 | B | |
| | 4 | 0 | 0 | 0 | N/A | N/A | 15 | 18 | 182 | 5 | B | | | | 182 | 5 | B | |
| | 5 | 0 | 0 | 0 | N/A | N/A | 15 | 18 | 336 | 5 | B | | | | 336 | 5 | B | |
| | 6 | 0 | 0 | 0 | N/A | N/A | 0 | 0 | 0 | N/A | N/A | | | | 0 | N/A | N/A | |
| | 7 | 0 | 0 | 0 | N/A | N/A | 0 | 0 | 0 | N/A | N/A | | | | 0 | N/A | N/A | |
| | 8 | 0 | 0 | 0 | N/A | N/A | 0 | 0 | 0 | N/A | N/A | | | | 0 | N/A | N/A | |
| ***N.Blvd @ 37th St*** | 1 | 0 | 0 | 0 | N/A | N/A | 0 | 0 | 0 | N/A | N/A | | | | 0 | N/A | N/A | |
| | 2 | 0 | 0 | 0 | N/A | N/A | 15 | 18 | 294 | 5 | B | | | | 294 | 5 | B | |
| | 3 | 0 | 0 | 0 | N/A | N/A | 18 | 22 | 205 | 5 | B | | | | 205 | 5 | B | |
| | 4 | 0 | 0 | 0 | N/A | N/A | 14 | 17 | 112 | 5 | B | | | | 112 | 5 | B | |
| | 5 | 0 | 0 | 0 | N/A | N/A | 15 | 18 | 337 | 5 | B | | | | 337 | 5 | B | |
| | 6 | 0 | 0 | 0 | N/A | N/A | 0 | 0 | 0 | N/A | N/A | | | | 0 | N/A | N/A | |
| | 7 | 0 | 0 | 0 | N/A | N/A | 0 | 0 | 0 | N/A | N/A | | | | 0 | N/A | N/A | |
| | 8 | 0 | 0 | 0 | N/A | N/A | 0 | 0 | 0 | N/A | N/A | | | | 0 | N/A | N/A | |
| ***Blvd @ 38th St*** | 1 | 0 | 0 | 0 | N/A | N/A | 15 | 18 | 894 | 8 | C | | | | 894 | 8 | C | |
| | 2 | 0 | 0 | 0 | N/A | N/A | 15 | 18 | 263 | 5 | B | | | | 263 | 5 | B | |
| | 3 | 0 | 0 | 0 | N/A | N/A | 18 | 22 | 165 | 5 | B | | | | 165 | 5 | B | |
| | 4 | 0 | 0 | 0 | N/A | N/A | 14 | 17 | 181 | 5 | B | | | | 181 | 5 | B | |
| | 5 | 0 | 0 | 0 | N/A | N/A | 15 | 18 | 308 | 5 | B | | | | 308 | 5 | B | |
| | 6 | 0 | 0 | 0 | N/A | N/A | 15 | 18 | 1071 | 9 | C | | | | 1071 | 9 | C | |
| | 7 | 0 | 0 | 0 | N/A | N/A | 14 | 17 | 79 | 4 | B | | | | 79 | 4 | B | |
| | 8 | 0 | 0 | 0 | N/A | N/A | 18 | 22 | 139 | 5 | B | | | | 139 | 5 | B | |
| ***S.Blvd @ 35th St*** | 1 | 0 | 0 | 0 | N/A | N/A | 15 | 18 | 655 | 7 | B | | | | 655 | 7 | B | |
| | 2 | 0 | 0 | 0 | N/A | N/A | 0 | 0 | 0 | N/A | N/A | | | | 0 | N/A | N/A | |
| | 3 | 0 | 0 | 0 | N/A | N/A | 0 | 0 | 0 | N/A | N/A | | | | 0 | N/A | N/A | |
| | 4 | 0 | 0 | 0 | N/A | N/A | 0 | 0 | 0 | N/A | N/A | | | | 0 | N/A | N/A | |
| | 5 | 0 | 0 | 0 | N/A | N/A | 0 | 0 | 0 | N/A | N/A | | | | 0 | N/A | N/A | |
| | 6 | 0 | 0 | 0 | N/A | N/A | 0 | 0 | 0 | N/A | N/A | | | | 0 | N/A | N/A | |
| | 7 | 0 | 0 | 0 | N/A | N/A | 15 | 18 | 75 | 4 | B | | | | 75 | 4 | B | |
| | 8 | 0 | 0 | 0 | N/A | N/A | 20 | 24 | 402 | 5 | B | | | | 402 | 5 | B | |
| ***S.Blvd @ 36th St*** | 1 | 0 | 0 | 0 | N/A | N/A | 15 | 18 | 358 | 6 | B | | | | 358 | 6 | B | |
| | 2 | 0 | 0 | 0 | N/A | N/A | 0 | 0 | 0 | N/A | N/A | | | | 0 | N/A | N/A | |
| | 3 | 0 | 0 | 0 | N/A | N/A | 0 | 0 | 0 | N/A | N/A | | | | 0 | N/A | N/A | |
| | 4 | 0 | 0 | 0 | N/A | N/A | 0 | 0 | 0 | N/A | N/A | | | | 0 | N/A | N/A | |
| | 5 | 0 | 0 | 0 | N/A | N/A | 0 | 0 | 0 | N/A | N/A | | | | 0 | N/A | N/A | |
| | 6 | 0 | 0 | 0 | N/A | N/A | 15 | 18 | 424 | 6 | B | | | | 424 | 6 | B | |
| | 7 | 0 | 0 | 0 | N/A | N/A | 15 | 18 | 187 | 5 | B | | | | 187 | 5 | B | |
| | 8 | 0 | 0 | 0 | N/A | N/A | 18 | 22 | 168 | 5 | B | | | | 168 | 5 | B | |

# Appendix S.5.3

**Pedestrian Improvement Analysis - Sidewalks Level of Service**

**2025 Future Conditions (PM)**

| Intersection | Walkway Location | 2025 Future without the Proposed Action | | | | | 2025 Future with the Proposed Action | | | | | | 2025 Future with the Proposed Action (Improvement) | | | | | |
|---|---|---|---|---|---|---|---|---|---|---|---|---|---|---|---|---|---|---|
| | | Effective Walkway width | Actual walkway width | Sidewalk Volumes | Platoon Flow Rate (ped/min/ft) | Platoon Level of Service | Effective Walkway width | Actual walkway width | Sidewalk Volumes | Platoon Flow Rate (ped/min/ft) | Platoon Level of Service | Impact? | Proposed Effective Walkwa | Proposed Actual walkway width | Sidewalk Volumes | Platoon Flow Rate (ped/min/ft) | Platoon Level of Service | Still Impact? |
| ***S.Blvd @ 37th St*** | 1 | 0 | 0 | 0 | N/A | N/A | 15 | 18 | 658 | 7 | B | | | | 658 | 7 | B | |
| | 2 | 0 | 0 | 0 | N/A | N/A | 0 | 0 | 0 | N/A | N/A | | | | 0 | N/A | N/A | |
| | 3 | 0 | 0 | 0 | N/A | N/A | 0 | 0 | 0 | N/A | N/A | | | | 0 | N/A | N/A | |
| | 4 | 0 | 0 | 0 | N/A | N/A | 0 | 0 | 0 | N/A | N/A | | | | 0 | N/A | N/A | |
| | 5 | 0 | 0 | 0 | N/A | N/A | 0 | 0 | 0 | N/A | N/A | | | | 0 | N/A | N/A | |
| | 6 | 0 | 0 | 0 | N/A | N/A | 15 | 18 | 778 | 7 | B | | | | 778 | 7 | B | |
| | 7 | 0 | 0 | 0 | N/A | N/A | 14 | 17 | 42 | 4 | B | | | | 42 | 4 | B | |
| | 8 | 0 | 0 | 0 | N/A | N/A | 18 | 22 | 143 | 5 | B | | | | 143 | 5 | B | |

# Appendix S.5.3

**Pedestrian Improvement Analysis - Sidewalks Level of Service**

**2025 Future Conditions (EVE)**

| Intersection | Walkway Location | 2025 Future without the Proposed Action | | | | | 2025 Future with the Proposed Action | | | | | | 2025 Future with the Proposed Action (Improvement) | | | | | |
|---|---|---|---|---|---|---|---|---|---|---|---|---|---|---|---|---|---|---|
| | | Effective Walkway width | Actual walkway width | Sidewalk Volumes | Platoon Flow Rate (ped/min/ft) | Platoon Level of Service | Effective Walkway width | Actual walkway width | Sidewalk Volumes | Platoon Flow Rate (ped/min/ft) | Platoon Level of Service | Impact? | Proposed Effective Walkwa | Proposed Actual walkway width | Sidewalk Volumes | Platoon Flow Rate (ped/min/ft) | Platoon Level of Service | Still Impact? |
| ***Twelfth Ave @ 30th St*** | 1 | 13 | 15 | 33 | 4 | B | 13 | 15 | 33 | 4 | B | | | | 33 | 4 | B | |
| | 2 | 9 | 11 | 10 | 4 | B | 9 | 11 | 10 | 4 | B | | | | 10 | 4 | B | |
| | 3 | 10 | 13 | 7 | 4 | B | 10 | 13 | 7 | 4 | B | | 30 | 35 | 7 | 4 | B | |
| | 4 | 10 | 13 | 0 | 4 | B | 10 | 13 | 0 | 4 | B | | | | 0 | 4 | B | |
| | 5 | 12 | 15 | 3 | 4 | B | 12 | 15 | 3 | 4 | B | | | | 3 | 4 | B | |
| | 6 | 13 | 15 | 34 | 4 | B | 13 | 15 | 34 | 4 | B | | | | 34 | 4 | B | |
| | 7 | 0 | 0 | 0 | N/A | N/A | 0 | 0 | 0 | N/A | N/A | | | | 0 | N/A | N/A | |
| | 8 | 0 | 0 | 0 | N/A | N/A | 0 | 0 | 0 | N/A | N/A | | | | 0 | N/A | N/A | |
| ***Twelfth Ave @ 34th St*** | 1 | 13 | 15 | 0 | 4 | B | 13 | 15 | 957 | 9 | C | | | | 957 | 9 | C | |
| | 2 | 9 | 12 | 1 | 4 | B | 9 | 12 | 523 | 8 | C | | | | 523 | 8 | C | |
| | 3 | 15 | 18 | 2 | 4 | B | 15 | 18 | 2 | 4 | B | | | | 2 | 4 | B | |
| | 4 | 15 | 18 | 3 | 4 | B | 15 | 18 | 1482 | 11 | D | | | | 525 | 6 | B | |
| | 5 | 9 | 12 | 1 | 4 | B | 9 | 12 | 1 | 4 | B | | | | 1 | 4 | B | |
| | 6 | 13 | 15 | 0 | 4 | B | 13 | 15 | 0 | 4 | B | | | | 0 | 4 | B | |
| | 7 | 0 | 0 | 0 | N/A | N/A | 0 | 0 | 0 | N/A | N/A | | | | 0 | N/A | N/A | |
| | 8 | 0 | 0 | 0 | N/A | N/A | 0 | 0 | 0 | N/A | N/A | | | | 0 | N/A | N/A | |
| ***Eleventh Ave @ 30th St*** | 1 | 12 | 15 | 1 | 4 | B | 12 | 15 | 4 | 4 | B | | | | 4 | 4 | B | |
| | 2 | 12 | 15 | 17 | 4 | B | 17 | 20 | 31 | 4 | B | | | | 31 | 4 | B | |
| | 3 | 10 | 13 | 8 | 4 | B | 10 | 13 | 518 | 7 | B | | 30 | 35 | 518 | 5 | B | |
| | 4 | 10 | 13 | 4 | 4 | B | 10 | 13 | 44 | 4 | B | | | | 44 | 4 | B | |
| | 5 | 12 | 15 | 10 | 4 | B | 12 | 15 | 77 | 4 | B | | | | 77 | 4 | B | |
| | 6 | 12 | 15 | 2 | 4 | B | 12 | 15 | 101 | 5 | B | | | | 101 | 5 | B | |
| | 7 | 10 | 13 | 1 | 4 | B | 10 | 13 | 1 | 4 | B | | | | 1 | 4 | B | |
| | 8 | 10 | 13 | 0 | 4 | B | 10 | 13 | 0 | 4 | B | | 30 | 35 | 0 | 4 | B | |
| ***Eleventh Ave @ 33rd St*** | 1 | 12 | 15 | 3 | 4 | B | 12 | 15 | 3660 | 24 | E | Yes | | | 2703 | 19 | E | Yes |
| | 2 | 12 | 15 | 25 | 4 | B | 17 | 20 | 59 | 4 | B | | | | 59 | 4 | B | |
| | 3 | 10 | 13 | 18 | 4 | B | 15 | 18 | 854 | 8 | C | | | | 854 | 8 | C | |
| | 4 | 10 | 13 | 2 | 4 | B | 10 | 13 | 1811 | 16 | E | Yes | 30 | 35 | 1811 | 8 | C | |
| | 5 | 12 | 15 | 8 | 4 | B | 17 | 20 | 32 | 4 | B | | | | 32 | 4 | B | |
| | 6 | 12 | 15 | 6 | 4 | B | 12 | 15 | 8 | 4 | B | | | | 8 | 4 | B | |
| | 7 | 10 | 13 | 1 | 4 | B | 0 | 0 | 0 | N/A | N/A | | | | 0 | N/A | N/A | |
| | 8 | 10 | 13 | 0 | 4 | B | 0 | 0 | 0 | N/A | N/A | | | | 0 | N/A | N/A | |
| ***Eleventh Ave @ 34th St*** | 1 | 13 | 15 | 3 | 4 | B | 13 | 15 | 302 | 6 | B | | | | 302 | 6 | B | |
| | 2 | 9 | 12 | 16 | 4 | B | 14 | 17 | 877 | 8 | C | | | | 877 | 8 | C | |
| | 3 | 17 | 20 | 7 | 4 | B | 26 | 30 | 192 | 4 | B | | | | 192 | 4 | B | |
| | 4 | 17 | 20 | 44 | 4 | B | 26 | 30 | 676 | 6 | B | | | | 676 | 6 | B | |
| | 5 | 12 | 15 | 32 | 4 | B | 17 | 20 | 138 | 5 | B | | | | 138 | 5 | B | |
| | 6 | 12 | 15 | 3 | 4 | B | 12 | 15 | 3664 | 24 | E | Yes | | | 2707 | 19 | E | Yes |
| | 7 | 17 | 20 | 5 | 4 | B | 17 | 20 | 1484 | 10 | C | | | | 527 | 6 | B | |
| | 8 | 17 | 20 | 18 | 4 | B | 17 | 20 | 18 | 4 | B | | | | 18 | 4 | B | |
| ***Eleventh Ave @ 39th St*** | 1 | 11 | 14 | 0 | 4 | B | 11 | 14 | 21 | 4 | B | | | | 21 | 4 | B | |
| | 2 | 7 | 10 | 0 | 4 | B | 12 | 15 | 9 | 4 | B | | | | 9 | 4 | B | |
| | 3 | 9 | 12 | 6 | 4 | B | 9 | 12 | 8 | 4 | B | | | | 8 | 4 | B | |
| | 4 | 8 | 11 | 7 | 4 | B | 15 | 18 | 276 | 5 | B | | | | 276 | 5 | B | |
| | 5 | 7 | 10 | 1 | 4 | B | 12 | 15 | 244 | 5 | B | | | | 244 | 5 | B | |
| | 6 | 12 | 15 | 0 | 4 | B | 12 | 15 | 32 | 4 | B | | | | 32 | 4 | B | |
| | 7 | 10 | 13 | 1 | 4 | B | 0 | 0 | 0 | N/A | N/A | | | | 0 | N/A | N/A | |
| | 8 | 12 | 15 | 1 | 4 | B | 0 | 0 | 0 | N/A | N/A | | | | 0 | N/A | N/A | |

# Appendix S.5.3

**Pedestrian Improvement Analysis - Sidewalks Level of Service**

**2025 Future Conditions (EVE)**

| Intersection | Walkway Location | 2025 Future without the Proposed Action | | | | | 2025 Future with the Proposed Action | | | | | | 2025 Future with the Proposed Action (Improvement) | | | | | |
|---|---|---|---|---|---|---|---|---|---|---|---|---|---|---|---|---|---|---|
| | | Effective Walkway width | Actual walkway width | Sidewalk Volumes | Platoon Flow Rate (ped/min/ft) | Platoon Level of Service | Effective Walkway width | Actual walkway width | Sidewalk Volumes | Platoon Flow Rate (ped/min/ft) | Platoon Level of Service | Impact? | Proposed Effective Walkwa | Proposed Actual walkway width | Sidewalk Volumes | Platoon Flow Rate (ped/min/ft) | Platoon Level of Service | Still Impact? |
| ***Eleventh Ave @ 42nd St*** | 1 | 13 | 16 | 26 | 4 | B | 13 | 16 | 78 | 4 | B | | | | 78 | 4 | B | |
| | 2 | 13 | 16 | 19 | 4 | B | 13 | 16 | 32 | 4 | B | | | | 32 | 4 | B | |
| | 3 | 12 | 15 | 109 | 5 | B | 12 | 15 | 134 | 5 | B | | | | 134 | 5 | B | |
| | 4 | 12 | 15 | 43 | 4 | B | 12 | 15 | 125 | 5 | B | | | | 125 | 5 | B | |
| | 5 | 12 | 16 | 8 | 4 | B | 12 | 16 | 25 | 4 | B | | | | 25 | 4 | B | |
| | 6 | 12 | 15 | 61 | 4 | B | 12 | 15 | 79 | 4 | B | | | | 79 | 4 | B | |
| | 7 | 12 | 16 | 21 | 4 | B | 12 | 16 | 21 | 4 | B | | | | 21 | 4 | B | |
| | 8 | 12 | 16 | 86 | 4 | B | 12 | 16 | 158 | 5 | B | | | | 158 | 5 | B | |
| ***Tenth Ave @ 30th St*** | 1 | 13 | 16 | 25 | 4 | B | 13 | 16 | 284 | 5 | B | | | | 284 | 5 | B | |
| | 2 | 12 | 15 | 21 | 4 | B | 12 | 15 | 226 | 5 | B | | | | 226 | 5 | B | |
| | 3 | 10 | 13 | 6 | 4 | B | 10 | 13 | 36 | 4 | B | | | | 36 | 4 | B | |
| | 4 | 12 | 15 | 13 | 4 | B | 12 | 15 | 17 | 4 | B | | | | 17 | 4 | B | |
| | 5 | 12 | 15 | 21 | 4 | B | 12 | 15 | 47 | 4 | B | | | | 47 | 4 | B | |
| | 6 | 12 | 15 | 36 | 4 | B | 12 | 15 | 73 | 4 | B | | | | 73 | 4 | B | |
| | 7 | 11 | 14 | 16 | 4 | B | 11 | 14 | 28 | 4 | B | | | | 28 | 4 | B | |
| | 8 | 11 | 14 | 5 | 4 | B | 11 | 14 | 473 | 7 | B | | 31 | 36 | 473 | 5 | B | |
| ***Tenth Ave @ 31st St*** | 1 | 12 | 15 | 23 | 4 | B | 12 | 15 | 1073 | 10 | C | | | | 1073 | 10 | C | |
| | 2 | 12 | 15 | 16 | 4 | B | 12 | 15 | 223 | 5 | B | | | | 223 | 5 | B | |
| | 3 | 11 | 13 | 6 | 4 | B | 11 | 13 | 608 | 8 | C | | | | 608 | 8 | C | |
| | 4 | 11 | 13 | 8 | 4 | B | 11 | 13 | 37 | 4 | B | | | | 37 | 4 | B | |
| | 5 | 12 | 15 | 22 | 4 | B | 12 | 15 | 231 | 5 | B | | | | 231 | 5 | B | |
| | 6 | 12 | 15 | 22 | 4 | B | 12 | 15 | 280 | 6 | B | | | | 280 | 6 | B | |
| | 7 | 0 | 0 | 0 | N/A | N/A | 0 | 0 | 0 | N/A | N/A | | | | 0 | N/A | N/A | |
| | 8 | 0 | 0 | 0 | N/A | N/A | 0 | 0 | 0 | N/A | N/A | | | | 0 | N/A | N/A | |
| ***Tenth Ave @ 33rd St*** | 1 | 12 | 15 | 18 | 4 | B | 12 | 15 | 81 | 4 | B | | | | 81 | 4 | B | |
| | 2 | 12 | 15 | 24 | 4 | B | 12 | 15 | 69 | 4 | B | | | | 69 | 4 | B | |
| | 3 | 10 | 13 | 11 | 4 | B | 10 | 13 | 195 | 5 | B | | | | 195 | 5 | B | |
| | 4 | 10 | 13 | 44 | 4 | B | 10 | 13 | 3939 | 30 | F | Yes | 30 | 35 | 3939 | 13 | D | |
| | 5 | 12 | 15 | 19 | 4 | B | 12 | 15 | 239 | 5 | B | | | | 239 | 5 | B | |
| | 6 | 12 | 15 | 33 | 4 | B | 12 | 15 | 1081 | 10 | C | | | | 1081 | 10 | C | |
| | 7 | 10 | 13 | 6 | 4 | B | 10 | 13 | 2926 | 24 | E | Yes | 30 | 35 | 2926 | 11 | D | |
| | 8 | 10 | 13 | 13 | 4 | B | 15 | 18 | 194 | 5 | B | | | | 194 | 5 | B | |
| ***Tenth Ave @ 34th St*** | 1 | 12 | 15 | 21 | 4 | B | 12 | 15 | 67 | 4 | B | | | | 67 | 4 | B | |
| | 2 | 12 | 15 | 38 | 4 | B | 12 | 15 | 75 | 4 | B | | | | 75 | 4 | B | |
| | 3 | 17 | 20 | 53 | 4 | B | 17 | 20 | 107 | 4 | B | | | | 107 | 4 | B | |
| | 4 | 17 | 20 | 77 | 4 | B | 17 | 20 | 218 | 5 | B | | | | 218 | 5 | B | |
| | 5 | 12 | 15 | 28 | 4 | B | 12 | 15 | 75 | 4 | B | | | | 75 | 4 | B | |
| | 6 | 12 | 15 | 24 | 4 | B | 12 | 15 | 89 | 4 | B | | | | 89 | 4 | B | |
| | 7 | 17 | 20 | 56 | 4 | B | 26 | 30 | 232 | 5 | B | | | | 232 | 5 | B | |
| | 8 | 17 | 20 | 42 | 4 | B | 26 | 30 | 92 | 4 | B | | | | 92 | 4 | B | |
| ***Ninth Ave @ 30th St*** | 1 | 14 | 16 | 41 | 4 | B | 14 | 16 | 113 | 5 | B | | | | 113 | 5 | B | |
| | 2 | 8 | 15 | 91 | 5 | B | 8 | 15 | 122 | 5 | B | | | | 122 | 5 | B | |
| | 3 | 6 | 13 | 26 | 4 | B | 6 | 13 | 61 | 5 | B | | | | 61 | 5 | B | |
| | 4 | 10 | 13 | 24 | 4 | B | 10 | 13 | 39 | 4 | B | | | | 39 | 4 | B | |
| | 5 | 13 | 16 | 66 | 4 | B | 13 | 16 | 93 | 4 | B | | | | 93 | 4 | B | |
| | 6 | 13 | 16 | 38 | 4 | B | 13 | 16 | 93 | 4 | B | | | | 93 | 4 | B | |
| | 7 | 11 | 14 | 41 | 4 | B | 11 | 14 | 44 | 4 | B | | | | 44 | 4 | B | |
| | 8 | 10 | 12 | 13 | 4 | B | 10 | 12 | 43 | 4 | B | | | | 43 | 4 | B | |

# Appendix S.5.3

**Pedestrian Improvement Analysis - Sidewalks Level of Service**

**2025 Future Conditions (EVE)**

| Intersection | Walkway Location | 2025 Future without the Proposed Action | | | | | 2025 Future with the Proposed Action | | | | | | 2025 Future with the Proposed Action (Improvement) | | | | | |
|---|---|---|---|---|---|---|---|---|---|---|---|---|---|---|---|---|---|---|
| | | Effective Walkway width | Actual walkway width | Sidewalk Volumes | Platoon Flow Rate (ped/min/ft) | Platoon Level of Service | Effective Walkway width | Actual walkway width | Sidewalk Volumes | Platoon Flow Rate (ped/min/ft) | Platoon Level of Service | Impact? | Proposed Effective Walkwa | Proposed Actual walkway width | Sidewalk Volumes | Platoon Flow Rate (ped/min/ft) | Platoon Level of Service | Still Impact? |
| ***Ninth Ave @ 31st St*** | 1 | 12 | 15 | 42 | 4 | B | 17 | 20 | 654 | 7 | B | | | | 654 | 7 | B | |
| | 2 | 10 | 13 | 44 | 4 | B | 10 | 13 | 266 | 6 | B | | | | 266 | 6 | B | |
| | 3 | 10 | 13 | 44 | 4 | B | 10 | 13 | 225 | 6 | B | | | | 225 | 6 | B | |
| | 4 | 10 | 13 | 30 | 4 | B | 10 | 13 | 84 | 5 | B | | | | 84 | 5 | B | |
| | 5 | 12 | 15 | 76 | 4 | B | 12 | 15 | 112 | 5 | B | | | | 112 | 5 | B | |
| | 6 | 12 | 15 | 40 | 4 | B | 12 | 15 | 117 | 5 | B | | | | 117 | 5 | B | |
| | 7 | 10 | 13 | 8 | 4 | B | 10 | 13 | 38 | 4 | B | | | | 38 | 4 | B | |
| | 8 | 10 | 13 | 20 | 4 | B | 10 | 13 | 712 | 9 | C | | | | 712 | 9 | C | |
| ***Ninth Ave @ 33rd St*** | 1 | 12 | 15 | 41 | 4 | B | 12 | 15 | 750 | 8 | C | | | | 750 | 8 | C | |
| | 2 | 12 | 15 | 102 | 5 | B | 12 | 15 | 280 | 6 | B | | | | 280 | 6 | B | |
| | 3 | 10 | 13 | 57 | 4 | B | 10 | 13 | 453 | 7 | B | | | | 453 | 7 | B | |
| | 4 | 10 | 13 | 143 | 5 | B | 10 | 13 | 289 | 6 | B | | 30 | 35 | 289 | 5 | B | |
| | 5 | 12 | 15 | 55 | 4 | B | 12 | 15 | 1319 | 11 | D | | | | 1319 | 11 | D | |
| | 6 | 12 | 15 | 63 | 4 | B | 17 | 20 | 3306 | 17 | E | Yes | | | 3306 | 17 | E | Yes |
| | 7 | 10 | 13 | 129 | 5 | B | 15 | 18 | 4502 | 24 | E | Yes | 35 | 40 | 4502 | 13 | D | |
| | 8 | 10 | 13 | 22 | 4 | B | 10 | 13 | 255 | 6 | B | | | | 255 | 6 | B | |
| ***Ninth Ave @ 34th St*** | 1 | 11 | 15 | 76 | 4 | B | 11 | 15 | 406 | 6 | B | | | | 406 | 6 | B | |
| | 2 | 12 | 15 | 107 | 5 | B | 12 | 15 | 147 | 5 | B | | | | 147 | 5 | B | |
| | 3 | 19 | 23 | 140 | 4 | B | 19 | 23 | 477 | 6 | B | | | | 477 | 6 | B | |
| | 4 | 19 | 23 | 169 | 5 | B | 19 | 23 | 376 | 5 | B | | | | 376 | 5 | B | |
| | 5 | 12 | 15 | 103 | 5 | B | 12 | 15 | 283 | 6 | B | | | | 283 | 6 | B | |
| | 6 | 12 | 15 | 46 | 4 | B | 12 | 15 | 757 | 8 | C | | | | 757 | 8 | C | |
| | 7 | 16 | 20 | 81 | 4 | B | 16 | 20 | 223 | 5 | B | | | | 223 | 5 | B | |
| | 8 | 15 | 20 | 60 | 4 | B | 15 | 20 | 111 | 4 | B | | | | 111 | 4 | B | |
| ***Eighth Ave @ 30th St*** | 1 | 11 | 14 | 136 | 5 | B | 11 | 14 | 151 | 5 | B | | | | 151 | 5 | B | |
| | 2 | 11 | 15 | 281 | 6 | B | 11 | 15 | 329 | 6 | B | | | | 329 | 6 | B | |
| | 3 | 9 | 13 | 90 | 5 | B | 9 | 13 | 96 | 5 | B | | | | 96 | 5 | B | |
| | 4 | 11 | 14 | 42 | 4 | B | 11 | 14 | 46 | 4 | B | | | | 46 | 4 | B | |
| | 5 | 12 | 15 | 117 | 5 | B | 12 | 15 | 157 | 5 | B | | | | 157 | 5 | B | |
| | 6 | 11 | 14 | 144 | 5 | B | 11 | 14 | 157 | 5 | B | | | | 157 | 5 | B | |
| | 7 | 10 | 14 | 52 | 4 | B | 10 | 14 | 67 | 4 | B | | | | 67 | 4 | B | |
| | 8 | 10 | 13 | 54 | 4 | B | 10 | 13 | 88 | 5 | B | | | | 88 | 5 | B | |
| ***Eighth Ave @ 31st St*** | 1 | 12 | 16 | 178 | 5 | B | 12 | 16 | 184 | 5 | B | | | | 184 | 5 | B | |
| | 2 | 18 | 24 | 131 | 4 | B | 17 | 20 | 151 | 5 | B | | | | 151 | 5 | B | |
| | 3 | 35 | 49 | 149 | 4 | B | 15 | 18 | 302 | 5 | B | | | | 302 | 5 | B | |
| | 4 | 10 | 14 | 23 | 4 | B | 10 | 14 | 80 | 5 | B | | | | 80 | 5 | B | |
| | 5 | 12 | 15 | 227 | 5 | B | 12 | 15 | 277 | 6 | B | | | | 277 | 6 | B | |
| | 6 | 12 | 15 | 264 | 5 | B | 12 | 15 | 282 | 6 | B | | | | 282 | 6 | B | |
| | 7 | 10 | 13 | 134 | 5 | B | 10 | 13 | 187 | 5 | B | | | | 187 | 5 | B | |
| | 8 | 21 | 24 | 108 | 4 | B | 21 | 24 | 288 | 5 | B | | | | 288 | 5 | B | |
| ***Eighth Ave @ 33rd St*** | 1 | 12 | 15 | 409 | 6 | B | 12 | 15 | 467 | 7 | B | | | | 467 | 7 | B | |
| | 2 | 12 | 19 | 345 | 6 | B | 12 | 19 | 439 | 6 | B | | | | 439 | 6 | B | |
| | 3 | 10 | 17 | 203 | 5 | B | 10 | 17 | 374 | 6 | B | | | | 374 | 6 | B | |
| | 4 | 30 | 43 | 398 | 5 | B | 15 | 18 | 500 | 6 | B | | | | 500 | 6 | B | |
| | 5 | 30 | 43 | 418 | 5 | B | 17 | 20 | 445 | 6 | B | | | | 445 | 6 | B | |
| | 6 | 12 | 16 | 236 | 5 | B | 12 | 16 | 241 | 5 | B | | | | 241 | 5 | B | |
| | 7 | 13 | 24 | 307 | 6 | B | 13 | 24 | 443 | 6 | B | | 33 | 46 | 443 | 5 | B | |
| | 8 | 7 | 14 | 104 | 5 | B | 7 | 14 | 367 | 7 | B | | | | 367 | 7 | B | |

# Appendix S.5.3

**Pedestrian Improvement Analysis - Sidewalks Level of Service**

**2025 Future Conditions (EVE)**

| Intersection | Walkway Location | 2025 Future without the Proposed Action | | | | | 2025 Future with the Proposed Action | | | | | | 2025 Future with the Proposed Action (Improvement) | | | | | |
|---|---|---|---|---|---|---|---|---|---|---|---|---|---|---|---|---|---|---|
| | | Effective Walkway width | Actual walkway width | Sidewalk Volumes | Platoon Flow Rate (ped/min/ft) | Platoon Level of Service | Effective Walkway width | Actual walkway width | Sidewalk Volumes | Platoon Flow Rate (ped/min/ft) | Platoon Level of Service | Impact? | Proposed Effective Walkwa | Proposed Actual walkway width | Sidewalk Volumes | Platoon Flow Rate (ped/min/ft) | Platoon Level of Service | Still Impact? |
| ***Eighth Ave @ 34th St*** | 1 | 11 | 15 | 121 | 5 | B | 11 | 15 | 137 | 5 | B | | | | 137 | 5 | B | |
| | 2 | 11 | 15 | 257 | 6 | B | 11 | 15 | 284 | 6 | B | | | | 284 | 6 | B | |
| | 3 | 19 | 22 | 455 | 6 | B | 19 | 22 | 480 | 6 | B | | | | 480 | 6 | B | |
| | 4 | 19 | 22 | 255 | 5 | B | 19 | 22 | 518 | 6 | B | | | | 518 | 6 | B | |
| | 5 | 12 | 15 | 98 | 5 | B | 12 | 15 | 194 | 5 | B | | | | 194 | 5 | B | |
| | 6 | 11 | 15 | 290 | 6 | B | 11 | 15 | 348 | 6 | B | | | | 348 | 6 | B | |
| | 7 | 12 | 22 | 98 | 5 | B | 12 | 22 | 304 | 6 | B | | | | 304 | 6 | B | |
| | 8 | 18 | 22 | 318 | 5 | B | 18 | 22 | 399 | 5 | B | | | | 399 | 5 | B | |
| ***Sixth Ave @ 34th St*** | 1 | 0 | 0 | 0 | N/A | N/A | 0 | 0 | 0 | N/A | N/A | | | | 0 | N/A | N/A | |
| | 2 | 10 | 17 | 320 | 6 | B | 10 | 17 | 323 | 6 | B | | | | 323 | 6 | B | |
| | 3 | 20 | 23 | 676 | 6 | B | 20 | 23 | 678 | 6 | B | | | | 678 | 6 | B | |
| | 4 | 18 | 23 | 523 | 6 | B | 18 | 23 | 525 | 6 | B | | | | 525 | 6 | B | |
| | 5 | 14 | 17 | 435 | 6 | B | 14 | 17 | 438 | 6 | B | | | | 438 | 6 | B | |
| | 6 | 0 | 0 | 0 | N/A | N/A | 0 | 0 | 0 | N/A | N/A | | | | 0 | N/A | N/A | |
| | 7 | 0 | 0 | 0 | N/A | N/A | 0 | 0 | 0 | N/A | N/A | | | | 0 | N/A | N/A | |
| | 8 | 0 | 0 | 0 | N/A | N/A | 0 | 0 | 0 | N/A | N/A | | | | 0 | N/A | N/A | |
| ***Broadway @ 34th St*** | 1 | 25 | 30 | 508 | 5 | B | 25 | 30 | 511 | 5 | B | | | | 511 | 5 | B | |
| | 2 | 0 | 0 | 0 | N/A | N/A | 0 | 0 | 0 | N/A | N/A | | | | 0 | N/A | N/A | |
| | 3 | 0 | 0 | 0 | N/A | N/A | 0 | 0 | 0 | N/A | N/A | | | | 0 | N/A | N/A | |
| | 4 | 0 | 0 | 0 | N/A | N/A | 0 | 0 | 0 | N/A | N/A | | | | 0 | N/A | N/A | |
| | 5 | 0 | 0 | 0 | N/A | N/A | 0 | 0 | 0 | N/A | N/A | | | | 0 | N/A | N/A | |
| | 6 | 25 | 30 | 630 | 6 | B | 25 | 30 | 634 | 6 | B | | | | 634 | 6 | B | |
| | 7 | 18 | 23 | 914 | 7 | B | 18 | 23 | 980 | 8 | C | | | | 980 | 8 | C | |
| | 8 | 18 | 23 | 724 | 7 | B | 18 | 23 | 758 | 7 | B | | | | 758 | 7 | B | |
| ***Blvd @ 33rd St*** | 1 | 0 | 0 | 0 | N/A | N/A | 15 | 15 | 276 | 5 | B | | | | 276 | 5 | B | |
| | 2 | 0 | 0 | 0 | N/A | N/A | 15 | 18 | 87 | 4 | B | | | | 87 | 4 | B | |
| | 3 | 0 | 0 | 0 | N/A | N/A | 15 | 18 | 558 | 6 | B | | | | 558 | 6 | B | |
| | 4 | 0 | 0 | 0 | N/A | N/A | 10 | 13 | 2917 | 23 | E | | 30 | 35 | 2917 | 10 | C | |
| | 5 | 0 | 0 | 0 | N/A | N/A | 0 | 0 | 0 | N/A | N/A | | | | 0 | N/A | N/A | |
| | 6 | 0 | 0 | 0 | N/A | N/A | 0 | 0 | 0 | N/A | N/A | | | | 0 | N/A | N/A | |
| | 7 | 0 | 0 | 0 | N/A | N/A | 10 | 13 | 1804 | 16 | E | | 30 | 35 | 1804 | 8 | C | |
| | 8 | 0 | 0 | 0 | N/A | N/A | 15 | 18 | 853 | 8 | C | | | | 853 | 8 | C | |
| ***Blvd @ 34th St*** | 1 | 0 | 0 | 0 | N/A | N/A | 15 | 18 | 309 | 5 | B | | | | 309 | 5 | B | |
| | 2 | 0 | 0 | 0 | N/A | N/A | 15 | 18 | 238 | 5 | B | | | | 238 | 5 | B | |
| | 3 | 0 | 0 | 0 | N/A | N/A | 26 | 30 | 47 | 4 | B | | | | 47 | 4 | B | |
| | 4 | 0 | 0 | 0 | N/A | N/A | 26 | 30 | 174 | 4 | B | | | | 174 | 4 | B | |
| | 5 | 0 | 0 | 0 | N/A | N/A | 15 | 18 | 94 | 4 | B | | | | 94 | 4 | B | |
| | 6 | 0 | 0 | 0 | N/A | N/A | 15 | 18 | 186 | 5 | B | | | | 186 | 5 | B | |
| | 7 | 0 | 0 | 0 | N/A | N/A | 26 | 30 | 645 | 6 | B | | | | 645 | 6 | B | |
| | 8 | 0 | 0 | 0 | N/A | N/A | 26 | 30 | 193 | 4 | B | | | | 193 | 4 | B | |
| ***N.Blvd @ 35th St*** | 1 | 0 | 0 | 0 | N/A | N/A | 0 | 0 | 0 | N/A | N/A | | | | 0 | N/A | N/A | |
| | 2 | 0 | 0 | 0 | N/A | N/A | 15 | 18 | 151 | 5 | B | | | | 151 | 5 | B | |
| | 3 | 0 | 0 | 0 | N/A | N/A | 20 | 24 | 26 | 4 | B | | | | 26 | 4 | B | |
| | 4 | 0 | 0 | 0 | N/A | N/A | 15 | 18 | 362 | 6 | B | | | | 362 | 6 | B | |
| | 5 | 0 | 0 | 0 | N/A | N/A | 15 | 18 | 242 | 5 | B | | | | 242 | 5 | B | |
| | 6 | 0 | 0 | 0 | N/A | N/A | 15 | 18 | 309 | 5 | B | | | | 309 | 5 | B | |
| | 7 | 0 | 0 | 0 | N/A | N/A | 15 | 18 | 259 | 5 | B | | | | 259 | 5 | B | |
| | 8 | 0 | 0 | 0 | N/A | N/A | 0 | 0 | 0 | N/A | N/A | | | | 0 | N/A | N/A | |

# Appendix S.5.3

**Pedestrian Improvement Analysis - Sidewalks Level of Service**

**2025 Future Conditions (EVE)**

| Intersection | Walkway Location | 2025 Future without the Proposed Action | | | | | 2025 Future with the Proposed Action | | | | | | 2025 Future with the Proposed Action (Improvement) | | | | | |
|---|---|---|---|---|---|---|---|---|---|---|---|---|---|---|---|---|---|---|
| | | Effective Walkway width | Actual walkway width | Sidewalk Volumes | Platoon Flow Rate (ped/min/ft) | Platoon Level of Service | Effective Walkway width | Actual walkway width | Sidewalk Volumes | Platoon Flow Rate (ped/min/ft) | Platoon Level of Service | Impact? | Proposed Effective Walkwa | Proposed Actual walkway width | Sidewalk Volumes | Platoon Flow Rate (ped/min/ft) | Platoon Level of Service | Still Impact? |
| ***N.Blvd @ 36th St*** | 1 | 0 | 0 | 0 | N/A | N/A | 0 | 0 | 0 | N/A | N/A | | | | 0 | N/A | N/A | |
| | 2 | 0 | 0 | 0 | N/A | N/A | 15 | 18 | 36 | 4 | B | | | | 36 | 4 | B | |
| | 3 | 0 | 0 | 0 | N/A | N/A | 18 | 22 | 20 | 4 | B | | | | 20 | 4 | B | |
| | 4 | 0 | 0 | 0 | N/A | N/A | 15 | 18 | 257 | 5 | B | | | | 257 | 5 | B | |
| | 5 | 0 | 0 | 0 | N/A | N/A | 15 | 18 | 147 | 5 | B | | | | 147 | 5 | B | |
| | 6 | 0 | 0 | 0 | N/A | N/A | 0 | 0 | 0 | N/A | N/A | | | | 0 | N/A | N/A | |
| | 7 | 0 | 0 | 0 | N/A | N/A | 0 | 0 | 0 | N/A | N/A | | | | 0 | N/A | N/A | |
| | 8 | 0 | 0 | 0 | N/A | N/A | 0 | 0 | 0 | N/A | N/A | | | | 0 | N/A | N/A | |
| ***N.Blvd @ 37th St*** | 1 | 0 | 0 | 0 | N/A | N/A | 0 | 0 | 0 | N/A | N/A | | | | 0 | N/A | N/A | |
| | 2 | 0 | 0 | 0 | N/A | N/A | 15 | 18 | 50 | 4 | B | | | | 50 | 4 | B | |
| | 3 | 0 | 0 | 0 | N/A | N/A | 18 | 22 | 19 | 4 | B | | | | 19 | 4 | B | |
| | 4 | 0 | 0 | 0 | N/A | N/A | 14 | 17 | 4 | 4 | B | | | | 4 | 4 | B | |
| | 5 | 0 | 0 | 0 | N/A | N/A | 15 | 18 | 45 | 4 | B | | | | 45 | 4 | B | |
| | 6 | 0 | 0 | 0 | N/A | N/A | 0 | 0 | 0 | N/A | N/A | | | | 0 | N/A | N/A | |
| | 7 | 0 | 0 | 0 | N/A | N/A | 0 | 0 | 0 | N/A | N/A | | | | 0 | N/A | N/A | |
| | 8 | 0 | 0 | 0 | N/A | N/A | 0 | 0 | 0 | N/A | N/A | | | | 0 | N/A | N/A | |
| ***Blvd @ 38th St*** | 1 | 0 | 0 | 0 | N/A | N/A | 15 | 18 | 49 | 4 | B | | | | 49 | 4 | B | |
| | 2 | 0 | 0 | 0 | N/A | N/A | 15 | 18 | 45 | 4 | B | | | | 45 | 4 | B | |
| | 3 | 0 | 0 | 0 | N/A | N/A | 18 | 22 | 12 | 4 | B | | | | 12 | 4 | B | |
| | 4 | 0 | 0 | 0 | N/A | N/A | 14 | 17 | 25 | 4 | B | | | | 25 | 4 | B | |
| | 5 | 0 | 0 | 0 | N/A | N/A | 15 | 18 | 55 | 4 | B | | | | 55 | 4 | B | |
| | 6 | 0 | 0 | 0 | N/A | N/A | 15 | 18 | 54 | 4 | B | | | | 54 | 4 | B | |
| | 7 | 0 | 0 | 0 | N/A | N/A | 14 | 17 | 11 | 4 | B | | | | 11 | 4 | B | |
| | 8 | 0 | 0 | 0 | N/A | N/A | 18 | 22 | 10 | 4 | B | | | | 10 | 4 | B | |
| ***S.Blvd @ 35th St*** | 1 | 0 | 0 | 0 | N/A | N/A | 15 | 18 | 573 | 7 | B | | | | 573 | 7 | B | |
| | 2 | 0 | 0 | 0 | N/A | N/A | 0 | 0 | 0 | N/A | N/A | | | | 0 | N/A | N/A | |
| | 3 | 0 | 0 | 0 | N/A | N/A | 0 | 0 | 0 | N/A | N/A | | | | 0 | N/A | N/A | |
| | 4 | 0 | 0 | 0 | N/A | N/A | 0 | 0 | 0 | N/A | N/A | | | | 0 | N/A | N/A | |
| | 5 | 0 | 0 | 0 | N/A | N/A | 0 | 0 | 0 | N/A | N/A | | | | 0 | N/A | N/A | |
| | 6 | 0 | 0 | 0 | N/A | N/A | 0 | 0 | 0 | N/A | N/A | | | | 0 | N/A | N/A | |
| | 7 | 0 | 0 | 0 | N/A | N/A | 15 | 18 | 259 | 5 | B | | | | 259 | 5 | B | |
| | 8 | 0 | 0 | 0 | N/A | N/A | 20 | 24 | 314 | 5 | B | | | | 314 | 5 | B | |
| ***S.Blvd @ 36th St*** | 1 | 0 | 0 | 0 | N/A | N/A | 15 | 18 | 33 | 4 | B | | | | 33 | 4 | B | |
| | 2 | 0 | 0 | 0 | N/A | N/A | 0 | 0 | 0 | N/A | N/A | | | | 0 | N/A | N/A | |
| | 3 | 0 | 0 | 0 | N/A | N/A | 0 | 0 | 0 | N/A | N/A | | | | 0 | N/A | N/A | |
| | 4 | 0 | 0 | 0 | N/A | N/A | 0 | 0 | 0 | N/A | N/A | | | | 0 | N/A | N/A | |
| | 5 | 0 | 0 | 0 | N/A | N/A | 0 | 0 | 0 | N/A | N/A | | | | 0 | N/A | N/A | |
| | 6 | 0 | 0 | 0 | N/A | N/A | 15 | 18 | 326 | 5 | B | | | | 326 | 5 | B | |
| | 7 | 0 | 0 | 0 | N/A | N/A | 15 | 18 | 97 | 4 | B | | | | 97 | 4 | B | |
| | 8 | 0 | 0 | 0 | N/A | N/A | 18 | 22 | 24 | 4 | B | | | | 24 | 4 | B | |
| ***S.Blvd @ 37th St*** | 1 | 0 | 0 | 0 | N/A | N/A | 15 | 18 | 36 | 4 | B | | | | 36 | 4 | B | |
| | 2 | 0 | 0 | 0 | N/A | N/A | 0 | 0 | 0 | N/A | N/A | | | | 0 | N/A | N/A | |
| | 3 | 0 | 0 | 0 | N/A | N/A | 0 | 0 | 0 | N/A | N/A | | | | 0 | N/A | N/A | |
| | 4 | 0 | 0 | 0 | N/A | N/A | 0 | 0 | 0 | N/A | N/A | | | | 0 | N/A | N/A | |
| | 5 | 0 | 0 | 0 | N/A | N/A | 0 | 0 | 0 | N/A | N/A | | | | 0 | N/A | N/A | |
| | 6 | 0 | 0 | 0 | N/A | N/A | 15 | 18 | 41 | 4 | B | | | | 41 | 4 | B | |
| | 7 | 0 | 0 | 0 | N/A | N/A | 14 | 17 | 6 | 4 | B | | | | 6 | 4 | B | |
| | 8 | 0 | 0 | 0 | N/A | N/A | 18 | 22 | 13 | 4 | B | | | | 13 | 4 | B | |

# Appendix S.5.3

**Pedestrian Improvement Analysis - Sidewalks Level of Service**

**2025 Future Conditions (SUN)**

| Intersection | Walkway Location | 2025 Future without the Proposed Action | | | | | 2025 Future with the Proposed Action | | | | | | 2025 Future with the Proposed Action (Improvement) | | | | | |
|---|---|---|---|---|---|---|---|---|---|---|---|---|---|---|---|---|---|---|
| | | Effective Walkway width | Actual walkway width | Sidewalk Volumes | Platoon Flow Rate (ped/min/ft) | Platoon Level of Service | Effective Walkway width | Actual walkway width | Sidewalk Volumes | Platoon Flow Rate (ped/min/ft) | Platoon Level of Service | Impact? | Proposed Effective Walkwa | Proposed Actual walkway width | Sidewalk Volumes | Platoon Flow Rate (ped/min/ft) | Platoon Level of Service | Still Impact? |
| ***Twelfth Ave @ 30th St*** | 1 | 13 | 15 | 49 | 4 | B | 13 | 15 | 49 | 4 | B | | 13 | 15 | 49 | 4 | B | |
| | 2 | 9 | 11 | 8 | 4 | B | 9 | 11 | 8 | 4 | B | | 9 | 11 | 8 | 4 | B | |
| | 3 | 10 | 13 | 3 | 4 | B | 10 | 13 | 3 | 4 | B | | 30 | 35 | 3 | 4 | B | |
| | 4 | 10 | 13 | 2 | 4 | B | 10 | 13 | 2 | 4 | B | | 10 | 13 | 2 | 4 | B | |
| | 5 | 12 | 15 | 0 | 4 | B | 12 | 15 | 0 | 4 | B | | 12 | 15 | 0 | 4 | B | |
| | 6 | 13 | 15 | 49 | 4 | B | 13 | 15 | 49 | 4 | B | | 13 | 15 | 49 | 4 | B | |
| | 7 | 0 | 0 | 0 | N/A | N/A | 0 | 0 | 0 | N/A | N/A | | 0 | 0 | 0 | N/A | N/A | |
| | 8 | 0 | 0 | 0 | N/A | N/A | 0 | 0 | 0 | N/A | N/A | | 0 | 0 | 0 | N/A | N/A | |
| ***Twelfth Ave @ 34th St*** | 1 | 13 | 15 | 36 | 4 | B | 13 | 15 | 1114 | 10 | C | | 13 | 15 | 1114 | 10 | C | |
| | 2 | 9 | 12 | 10 | 4 | B | 9 | 12 | 616 | 9 | C | | 9 | 12 | 616 | 9 | C | |
| | 3 | 15 | 18 | 3 | 4 | B | 15 | 18 | 3 | 4 | B | | 15 | 18 | 3 | 4 | B | |
| | 4 | 15 | 18 | 121 | 5 | B | 15 | 18 | 1805 | 12 | D | | 15 | 18 | 727 | 7 | B | |
| | 5 | 9 | 12 | 6 | 4 | B | 9 | 12 | 6 | 4 | B | | 9 | 12 | 6 | 4 | B | |
| | 6 | 13 | 15 | 37 | 4 | B | 13 | 15 | 37 | 4 | B | | 13 | 15 | 37 | 4 | B | |
| | 7 | 0 | 0 | 0 | N/A | N/A | 0 | 0 | 0 | N/A | N/A | | 0 | 0 | 0 | N/A | N/A | |
| | 8 | 0 | 0 | 0 | N/A | N/A | 0 | 0 | 0 | N/A | N/A | | 0 | 0 | 0 | N/A | N/A | |
| ***Eleventh Ave @ 30th St*** | 1 | 12 | 15 | 10 | 4 | B | 12 | 15 | 31 | 4 | B | | 12 | 15 | 31 | 4 | B | |
| | 2 | 12 | 15 | 73 | 4 | B | 17 | 20 | 174 | 5 | B | | 17 | 20 | 174 | 5 | B | |
| | 3 | 10 | 13 | 46 | 4 | B | 10 | 13 | 550 | 8 | C | | 30 | 35 | 550 | 5 | B | |
| | 4 | 10 | 13 | 10 | 4 | B | 10 | 13 | 93 | 5 | B | | 10 | 13 | 93 | 5 | B | |
| | 5 | 12 | 15 | 82 | 4 | B | 12 | 15 | 266 | 5 | B | | 12 | 15 | 266 | 5 | B | |
| | 6 | 12 | 15 | 20 | 4 | B | 12 | 15 | 458 | 7 | B | | 12 | 15 | 458 | 7 | B | |
| | 7 | 10 | 13 | 2 | 4 | B | 10 | 13 | 2 | 4 | B | | 10 | 13 | 2 | 4 | B | |
| | 8 | 10 | 13 | 0 | 4 | B | 10 | 13 | 509 | 7 | B | | 30 | 35 | 509 | 5 | B | |
| ***Eleventh Ave @ 33rd St*** | 1 | 12 | 15 | 4 | 4 | B | 12 | 15 | 4535 | 29 | F | Yes | 12 | 15 | 3457 | 23 | E | Yes |
| | 2 | 12 | 15 | 89 | 4 | B | 17 | 20 | 223 | 5 | B | | 17 | 20 | 223 | 5 | B | |
| | 3 | 10 | 13 | 53 | 4 | B | 15 | 18 | 921 | 8 | C | | 15 | 18 | 921 | 8 | C | |
| | 4 | 10 | 13 | 2 | 4 | B | 10 | 13 | 2286 | 19 | E | Yes | 30 | 35 | 2286 | 9 | C | |
| | 5 | 12 | 15 | 40 | 4 | B | 17 | 20 | 152 | 5 | B | | 17 | 20 | 152 | 5 | B | |
| | 6 | 12 | 15 | 3 | 4 | B | 12 | 15 | 23 | 4 | B | | 12 | 15 | 23 | 4 | B | |
| | 7 | 10 | 13 | 2 | 4 | B | 0 | 0 | 0 | N/A | N/A | | 0 | 0 | 0 | N/A | N/A | |
| | 8 | 10 | 13 | 1 | 4 | B | 0 | 0 | 0 | N/A | N/A | | 0 | 0 | 0 | N/A | N/A | |
| ***Eleventh Ave @ 34th St*** | 1 | 13 | 15 | 28 | 4 | B | 13 | 15 | 952 | 9 | C | | 13 | 15 | 952 | 9 | C | |
| | 2 | 9 | 12 | 68 | 5 | B | 14 | 17 | 1597 | 12 | D | | 14 | 17 | 1597 | 12 | D | |
| | 3 | 17 | 20 | 127 | 4 | B | 26 | 30 | 344 | 5 | B | | 26 | 30 | 344 | 5 | B | |
| | 4 | 17 | 20 | 79 | 4 | B | 26 | 30 | 680 | 6 | B | | 26 | 30 | 680 | 6 | B | |
| | 5 | 12 | 15 | 80 | 4 | B | 17 | 20 | 247 | 5 | B | | 17 | 20 | 247 | 5 | B | |
| | 6 | 12 | 15 | 6 | 4 | B | 12 | 15 | 4757 | 30 | F | Yes | 12 | 15 | 3679 | 24 | E | Yes |
| | 7 | 17 | 20 | 122 | 4 | B | 17 | 20 | 1806 | 11 | D | | 17 | 20 | 728 | 7 | B | |
| | 8 | 17 | 20 | 16 | 4 | B | 17 | 20 | 16 | 4 | B | | 17 | 20 | 16 | 4 | B | |
| ***Eleventh Ave @ 39th St*** | 1 | 11 | 14 | 8 | 4 | B | 11 | 14 | 185 | 5 | B | | 11 | 14 | 185 | 5 | B | |
| | 2 | 7 | 10 | 1 | 4 | B | 12 | 15 | 399 | 6 | B | | 12 | 15 | 399 | 6 | B | |
| | 3 | 9 | 12 | 4 | 4 | B | 9 | 12 | 94 | 5 | B | | 9 | 12 | 94 | 5 | B | |
| | 4 | 8 | 11 | 98 | 5 | B | 15 | 18 | 498 | 6 | B | | 15 | 18 | 498 | 6 | B | |
| | 5 | 7 | 10 | 4 | 4 | B | 12 | 15 | 730 | 8 | C | | 12 | 15 | 730 | 8 | C | |
| | 6 | 12 | 15 | 22 | 4 | B | 12 | 15 | 253 | 5 | B | | 12 | 15 | 253 | 5 | B | |
| | 7 | 10 | 13 | 85 | 5 | B | 0 | 0 | 0 | N/A | N/A | | 0 | 0 | 0 | N/A | N/A | |
| | 8 | 12 | 15 | 0 | 4 | B | 0 | 0 | 0 | N/A | N/A | | 0 | 0 | 0 | N/A | N/A | |

# Appendix S.5.3

**Pedestrian Improvement Analysis - Sidewalks Level of Service**

**2025 Future Conditions (SUN)**

| Intersection | Walkway Location | 2025 Future without the Proposed Action | | | | | 2025 Future with the Proposed Action | | | | | | 2025 Future with the Proposed Action (Improvement) | | | | | |
|---|---|---|---|---|---|---|---|---|---|---|---|---|---|---|---|---|---|---|
| | | Effective Walkway width | Actual walkway width | Sidewalk Volumes | Platoon Flow Rate (ped/min/ft) | Platoon Level of Service | Effective Walkway width | Actual walkway width | Sidewalk Volumes | Platoon Flow Rate (ped/min/ft) | Platoon Level of Service | Impact? | Proposed Effective Walkwa | Proposed Actual walkway width | Sidewalk Volumes | Platoon Flow Rate (ped/min/ft) | Platoon Level of Service | Still Impact? |
| ***Eleventh Ave @ 42nd St*** | 1 | 13 | 16 | 41 | 4 | B | 13 | 16 | 103 | 5 | B | | 13 | 16 | 103 | 5 | B | |
| | 2 | 13 | 16 | 33 | 4 | B | 13 | 16 | 335 | 6 | B | | 13 | 16 | 335 | 6 | B | |
| | 3 | 12 | 15 | 269 | 5 | B | 12 | 15 | 252 | 5 | B | | 12 | 15 | 252 | 5 | B | |
| | 4 | 12 | 15 | 195 | 5 | B | 12 | 15 | 564 | 7 | B | | 12 | 15 | 564 | 7 | B | |
| | 5 | 12 | 16 | 9 | 4 | B | 12 | 16 | 289 | 6 | B | | 12 | 16 | 289 | 6 | B | |
| | 6 | 12 | 15 | 87 | 4 | B | 12 | 15 | 175 | 5 | B | | 12 | 15 | 175 | 5 | B | |
| | 7 | 12 | 16 | 185 | 5 | B | 12 | 16 | 189 | 5 | B | | 12 | 16 | 189 | 5 | B | |
| | 8 | 12 | 16 | 230 | 5 | B | 12 | 16 | 161 | 5 | B | | 12 | 16 | 161 | 5 | B | |
| ***Tenth Ave @ 30th St*** | 1 | 13 | 16 | 86 | 4 | B | 13 | 16 | 509 | 7 | B | | 13 | 16 | 509 | 7 | B | |
| | 2 | 12 | 15 | 85 | 4 | B | 12 | 15 | 352 | 6 | B | | 12 | 15 | 352 | 6 | B | |
| | 3 | 10 | 13 | 74 | 4 | B | 10 | 13 | 212 | 5 | B | | 10 | 13 | 212 | 5 | B | |
| | 4 | 12 | 15 | 42 | 4 | B | 12 | 15 | 78 | 4 | B | | 12 | 15 | 78 | 4 | B | |
| | 5 | 12 | 15 | 65 | 4 | B | 12 | 15 | 170 | 5 | B | | 12 | 15 | 170 | 5 | B | |
| | 6 | 12 | 15 | 126 | 5 | B | 12 | 15 | 345 | 6 | B | | 12 | 15 | 345 | 6 | B | |
| | 7 | 11 | 14 | 45 | 4 | B | 11 | 14 | 87 | 5 | B | | 11 | 14 | 87 | 5 | B | |
| | 8 | 11 | 14 | 53 | 4 | B | 11 | 14 | 698 | 8 | C | | 31 | 36 | 698 | 6 | B | |
| ***Tenth Ave @ 31st St*** | 1 | 12 | 15 | 73 | 4 | B | 12 | 15 | 1361 | 12 | D | | 12 | 15 | 1361 | 12 | D | |
| | 2 | 12 | 15 | 53 | 4 | B | 12 | 15 | 315 | 6 | B | | 12 | 15 | 315 | 6 | B | |
| | 3 | 11 | 13 | 63 | 4 | B | 11 | 13 | 1167 | 11 | D | | 11 | 13 | 1167 | 11 | D | |
| | 4 | 11 | 13 | 14 | 4 | B | 11 | 13 | 71 | 4 | B | | 11 | 13 | 71 | 4 | B | |
| | 5 | 12 | 15 | 90 | 5 | B | 12 | 15 | 367 | 6 | B | | 12 | 15 | 367 | 6 | B | |
| | 6 | 12 | 15 | 73 | 4 | B | 12 | 15 | 500 | 7 | B | | 12 | 15 | 500 | 7 | B | |
| | 7 | 0 | 0 | 0 | N/A | N/A | 0 | 0 | 0 | N/A | N/A | | 0 | 0 | 0 | N/A | N/A | |
| | 8 | 0 | 0 | 0 | N/A | N/A | 0 | 0 | 0 | N/A | N/A | | 0 | 0 | 0 | N/A | N/A | |
| ***Tenth Ave @ 33rd St*** | 1 | 12 | 15 | 67 | 4 | B | 12 | 15 | 393 | 6 | B | | 12 | 15 | 393 | 6 | B | |
| | 2 | 12 | 15 | 58 | 4 | B | 12 | 15 | 315 | 6 | B | | 12 | 15 | 315 | 6 | B | |
| | 3 | 10 | 13 | 73 | 4 | B | 10 | 13 | 317 | 6 | B | | 10 | 13 | 317 | 6 | B | |
| | 4 | 10 | 13 | 150 | 5 | B | 10 | 13 | 4287 | 33 | F | Yes | 30 | 35 | 4287 | 14 | D | |
| | 5 | 12 | 15 | 54 | 4 | B | 12 | 15 | 341 | 6 | B | | 12 | 15 | 341 | 6 | B | |
| | 6 | 12 | 15 | 75 | 4 | B | 12 | 15 | 1392 | 12 | D | | 12 | 15 | 1392 | 12 | D | |
| | 7 | 10 | 13 | 60 | 4 | B | 10 | 13 | 3260 | 26 | F | Yes | 30 | 35 | 3260 | 11 | D | |
| | 8 | 10 | 13 | 73 | 4 | B | 15 | 18 | 355 | 6 | B | | 15 | 18 | 355 | 6 | B | |
| ***Tenth Ave @ 34th St*** | 1 | 12 | 15 | 46 | 4 | B | 12 | 15 | 330 | 6 | B | | 12 | 15 | 330 | 6 | B | |
| | 2 | 12 | 15 | 39 | 4 | B | 12 | 15 | 282 | 6 | B | | 12 | 15 | 282 | 6 | B | |
| | 3 | 17 | 20 | 150 | 5 | B | 17 | 20 | 254 | 5 | B | | 17 | 20 | 254 | 5 | B | |
| | 4 | 17 | 20 | 93 | 4 | B | 17 | 20 | 351 | 5 | B | | 17 | 20 | 351 | 5 | B | |
| | 5 | 12 | 15 | 62 | 4 | B | 12 | 15 | 300 | 6 | B | | 12 | 15 | 300 | 6 | B | |
| | 6 | 12 | 15 | 41 | 4 | B | 12 | 15 | 402 | 6 | B | | 12 | 15 | 402 | 6 | B | |
| | 7 | 17 | 20 | 73 | 4 | B | 26 | 30 | 266 | 5 | B | | 26 | 30 | 266 | 5 | B | |
| | 8 | 17 | 20 | 114 | 4 | B | 26 | 30 | 284 | 5 | B | | 26 | 30 | 284 | 5 | B | |
| ***Ninth Ave @ 30th St*** | 1 | 14 | 16 | 186 | 5 | B | 14 | 16 | 502 | 6 | B | | 14 | 16 | 502 | 6 | B | |
| | 2 | 8 | 15 | 294 | 6 | B | 8 | 15 | 451 | 8 | C | | 8 | 15 | 451 | 8 | C | |
| | 3 | 6 | 13 | 69 | 5 | B | 6 | 13 | 184 | 6 | B | | 6 | 13 | 184 | 6 | B | |
| | 4 | 10 | 13 | 111 | 5 | B | 10 | 13 | 260 | 6 | B | | 10 | 13 | 260 | 6 | B | |
| | 5 | 13 | 16 | 180 | 5 | B | 13 | 16 | 365 | 6 | B | | 13 | 16 | 365 | 6 | B | |
| | 6 | 13 | 16 | 179 | 5 | B | 13 | 16 | 344 | 6 | B | | 13 | 16 | 344 | 6 | B | |
| | 7 | 11 | 14 | 181 | 5 | B | 11 | 14 | 212 | 5 | B | | 11 | 14 | 212 | 5 | B | |
| | 8 | 10 | 12 | 91 | 5 | B | 10 | 12 | 224 | 5 | B | | 10 | 12 | 224 | 5 | B | |

# Appendix S.5.3

**Pedestrian Improvement Analysis - Sidewalks Level of Service**

**2025 Future Conditions (SUN)**

| Intersection | Walkway Location | 2025 Future without the Proposed Action | | | | | 2025 Future with the Proposed Action | | | | | | 2025 Future with the Proposed Action (Improvement) | | | | | |
|---|---|---|---|---|---|---|---|---|---|---|---|---|---|---|---|---|---|---|
| | | Effective Walkway width | Actual walkway width | Sidewalk Volumes | Platoon Flow Rate (ped/min/ft) | Platoon Level of Service | Effective Walkway width | Actual walkway width | Sidewalk Volumes | Platoon Flow Rate (ped/min/ft) | Platoon Level of Service | Impact? | Proposed Effective Walkwa | Proposed Actual walkway width | Sidewalk Volumes | Platoon Flow Rate (ped/min/ft) | Platoon Level of Service | Still Impact? |
| ***Ninth Ave @ 31st St*** | 1 | 12 | 15 | 53 | 4 | B | 17 | 20 | 890 | 7 | B | | 17 | 20 | 890 | 7 | B | |
| | 2 | 10 | 13 | 146 | 5 | B | 10 | 13 | 432 | 7 | B | | 10 | 13 | 432 | 7 | B | |
| | 3 | 10 | 13 | 462 | 7 | B | 10 | 13 | 694 | 9 | C | | 10 | 13 | 694 | 9 | C | |
| | 4 | 10 | 13 | 22 | 4 | B | 10 | 13 | 106 | 5 | B | | 10 | 13 | 106 | 5 | B | |
| | 5 | 12 | 15 | 214 | 5 | B | 12 | 15 | 403 | 6 | B | | 12 | 15 | 403 | 6 | B | |
| | 6 | 12 | 15 | 125 | 5 | B | 12 | 15 | 536 | 7 | B | | 12 | 15 | 536 | 7 | B | |
| | 7 | 10 | 13 | 12 | 4 | B | 10 | 13 | 65 | 4 | B | | 10 | 13 | 65 | 4 | B | |
| | 8 | 10 | 13 | 119 | 5 | B | 10 | 13 | 1094 | 11 | D | | 10 | 13 | 1094 | 11 | D | |
| ***Ninth Ave @ 33rd St*** | 1 | 12 | 15 | 73 | 4 | B | 12 | 15 | 889 | 9 | C | | 12 | 15 | 889 | 9 | C | |
| | 2 | 12 | 15 | 335 | 6 | B | 12 | 15 | 660 | 8 | C | | 12 | 15 | 660 | 8 | C | |
| | 3 | 10 | 13 | 117 | 5 | B | 10 | 13 | 742 | 9 | C | | 10 | 13 | 742 | 9 | C | |
| | 4 | 10 | 13 | 472 | 7 | B | 10 | 13 | 697 | 9 | C | | 30 | 35 | 697 | 6 | B | |
| | 5 | 12 | 15 | 113 | 5 | B | 12 | 15 | 1466 | 12 | D | | 12 | 15 | 1466 | 12 | D | |
| | 6 | 12 | 15 | 85 | 4 | B | 17 | 20 | 3591 | 18 | E | Yes | 17 | 20 | 3591 | 18 | E | Yes |
| | 7 | 10 | 13 | 201 | 5 | B | 15 | 18 | 4970 | 26 | F | Yes | 35 | 40 | 4970 | 13 | D | |
| | 8 | 10 | 13 | 81 | 5 | B | 10 | 13 | 534 | 8 | C | | 10 | 13 | 534 | 8 | C | |
| ***Ninth Ave @ 34th St*** | 1 | 11 | 15 | 94 | 5 | B | 11 | 15 | 563 | 7 | B | | 11 | 15 | 563 | 7 | B | |
| | 2 | 12 | 15 | 239 | 5 | B | 12 | 15 | 389 | 6 | B | | 12 | 15 | 389 | 6 | B | |
| | 3 | 19 | 23 | 253 | 5 | B | 19 | 23 | 465 | 6 | B | | 19 | 23 | 465 | 6 | B | |
| | 4 | 19 | 23 | 280 | 5 | B | 19 | 23 | 721 | 7 | B | | 19 | 23 | 721 | 7 | B | |
| | 5 | 12 | 15 | 370 | 6 | B | 12 | 15 | 697 | 8 | C | | 12 | 15 | 697 | 8 | C | |
| | 6 | 12 | 15 | 85 | 4 | B | 12 | 15 | 906 | 9 | C | | 12 | 15 | 906 | 9 | C | |
| | 7 | 16 | 20 | 152 | 5 | B | 16 | 20 | 411 | 6 | B | | 16 | 20 | 411 | 6 | B | |
| | 8 | 15 | 20 | 163 | 5 | B | 15 | 20 | 250 | 5 | B | | 15 | 20 | 250 | 5 | B | |
| ***Eighth Ave @ 30th St*** | 1 | 11 | 14 | 271 | 6 | B | 11 | 14 | 327 | 6 | B | | 11 | 14 | 327 | 6 | B | |
| | 2 | 11 | 15 | 259 | 6 | B | 11 | 15 | 377 | 6 | B | | 11 | 15 | 377 | 6 | B | |
| | 3 | 9 | 13 | 83 | 5 | B | 9 | 13 | 107 | 5 | B | | 9 | 13 | 107 | 5 | B | |
| | 4 | 11 | 14 | 42 | 4 | B | 11 | 14 | 58 | 4 | B | | 11 | 14 | 58 | 4 | B | |
| | 5 | 12 | 15 | 155 | 5 | B | 12 | 15 | 374 | 6 | B | | 12 | 15 | 374 | 6 | B | |
| | 6 | 11 | 14 | 161 | 5 | B | 11 | 14 | 210 | 5 | B | | 11 | 14 | 210 | 5 | B | |
| | 7 | 10 | 14 | 82 | 5 | B | 10 | 14 | 226 | 6 | B | | 10 | 14 | 226 | 6 | B | |
| | 8 | 10 | 13 | 112 | 5 | B | 10 | 13 | 221 | 5 | B | | 10 | 13 | 221 | 5 | B | |
| ***Eighth Ave @ 31st St*** | 1 | 12 | 16 | 199 | 5 | B | 12 | 16 | 236 | 5 | B | | 12 | 16 | 236 | 5 | B | |
| | 2 | 18 | 24 | 294 | 5 | B | 17 | 20 | 379 | 5 | B | | 17 | 20 | 379 | 5 | B | |
| | 3 | 35 | 49 | 343 | 5 | B | 15 | 18 | 548 | 6 | B | | 15 | 18 | 548 | 6 | B | |
| | 4 | 10 | 14 | 44 | 4 | B | 10 | 14 | 168 | 5 | B | | 10 | 14 | 168 | 5 | B | |
| | 5 | 12 | 15 | 226 | 5 | B | 12 | 15 | 338 | 6 | B | | 12 | 15 | 338 | 6 | B | |
| | 6 | 12 | 15 | 189 | 5 | B | 12 | 15 | 263 | 5 | B | | 12 | 15 | 263 | 5 | B | |
| | 7 | 10 | 13 | 26 | 4 | B | 10 | 13 | 106 | 5 | B | | 10 | 13 | 106 | 5 | B | |
| | 8 | 21 | 24 | 249 | 5 | B | 21 | 24 | 471 | 5 | B | | 21 | 24 | 471 | 5 | B | |
| ***Eighth Ave @ 33rd St*** | 1 | 12 | 15 | 602 | 7 | B | 12 | 15 | 705 | 8 | C | | 12 | 15 | 705 | 8 | C | |
| | 2 | 12 | 19 | 599 | 7 | B | 12 | 19 | 823 | 9 | C | | 12 | 19 | 823 | 9 | C | |
| | 3 | 10 | 17 | 243 | 6 | B | 10 | 17 | 398 | 7 | B | | 10 | 17 | 398 | 7 | B | |
| | 4 | 30 | 43 | 474 | 5 | B | 15 | 18 | 676 | 7 | B | | 15 | 18 | 676 | 7 | B | |
| | 5 | 30 | 43 | 197 | 4 | B | 17 | 20 | 312 | 5 | B | | 17 | 20 | 312 | 5 | B | |
| | 6 | 12 | 16 | 261 | 5 | B | 12 | 16 | 295 | 6 | B | | 12 | 16 | 295 | 6 | B | |
| | 7 | 13 | 24 | 560 | 7 | B | 13 | 24 | 749 | 8 | C | | 33 | 46 | 749 | 6 | B | |
| | 8 | 7 | 14 | 206 | 6 | B | 7 | 14 | 507 | 9 | C | | 7 | 14 | 507 | 9 | C | |

# Appendix S.5.3

**Pedestrian Improvement Analysis - Sidewalks Level of Service**

**2025 Future Conditions (SUN)**

| Intersection | Walkway Location | 2025 Future without the Proposed Action | | | | | 2025 Future with the Proposed Action | | | | | | 2025 Future with the Proposed Action (Improvement) | | | | | |
|---|---|---|---|---|---|---|---|---|---|---|---|---|---|---|---|---|---|---|
| | | Effective Walkway width | Actual walkway width | Sidewalk Volumes | Platoon Flow Rate (ped/min/ft) | Platoon Level of Service | Effective Walkway width | Actual walkway width | Sidewalk Volumes | Platoon Flow Rate (ped/min/ft) | Platoon Level of Service | Impact? | Proposed Effective Walkwa | Proposed Actual walkway width | Sidewalk Volumes | Platoon Flow Rate (ped/min/ft) | Platoon Level of Service | Still Impact? |
| ***Eighth Ave @ 34th St*** | 1 | 11 | 15 | 375 | 6 | B | 11 | 15 | 436 | 7 | B | | 11 | 15 | 436 | 7 | B | |
| | 2 | 11 | 15 | 501 | 7 | B | 11 | 15 | 609 | 8 | C | | 11 | 15 | 609 | 8 | C | |
| | 3 | 19 | 22 | 686 | 6 | B | 19 | 22 | 730 | 7 | B | | 19 | 22 | 730 | 7 | B | |
| | 4 | 19 | 22 | 501 | 6 | B | 19 | 22 | 796 | 7 | B | | 19 | 22 | 796 | 7 | B | |
| | 5 | 12 | 15 | 413 | 6 | B | 12 | 15 | 633 | 8 | C | | 12 | 15 | 633 | 8 | C | |
| | 6 | 11 | 15 | 476 | 7 | B | 11 | 15 | 570 | 7 | B | | 11 | 15 | 570 | 7 | B | |
| | 7 | 12 | 22 | 495 | 7 | B | 12 | 22 | 748 | 8 | C | | 12 | 22 | 748 | 8 | C | |
| | 8 | 18 | 22 | 509 | 6 | B | 18 | 22 | 635 | 6 | B | | 18 | 22 | 635 | 6 | B | |
| ***Sixth Ave @ 34th St*** | 1 | 0 | 0 | 0 | N/A | N/A | 0 | 0 | 0 | N/A | N/A | | 0 | 0 | 0 | N/A | N/A | |
| | 2 | 10 | 17 | 817 | 9 | C | 10 | 17 | 825 | 10 | C | | 10 | 17 | 825 | 10 | C | |
| | 3 | 20 | 23 | 578 | 6 | B | 20 | 23 | 595 | 6 | B | | 20 | 23 | 595 | 6 | B | |
| | 4 | 18 | 23 | 788 | 7 | B | 18 | 23 | 805 | 7 | B | | 18 | 23 | 805 | 7 | B | |
| | 5 | 14 | 17 | 421 | 6 | B | 14 | 17 | 429 | 6 | B | | 14 | 17 | 429 | 6 | B | |
| | 6 | 0 | 0 | 0 | N/A | N/A | 0 | 0 | 0 | N/A | N/A | | 0 | 0 | 0 | N/A | N/A | |
| | 7 | 0 | 0 | 0 | N/A | N/A | 0 | 0 | 0 | N/A | N/A | | 0 | 0 | 0 | N/A | N/A | |
| | 8 | 0 | 0 | 0 | N/A | N/A | 0 | 0 | 0 | N/A | N/A | | 0 | 0 | 0 | N/A | N/A | |
| ***Broadway @ 34th St*** | 1 | 25 | 30 | 881 | 6 | B | 25 | 30 | 902 | 6 | B | | 25 | 30 | 902 | 6 | B | |
| | 2 | 0 | 0 | 0 | N/A | N/A | 0 | 0 | 0 | N/A | N/A | | 0 | 0 | 0 | N/A | N/A | |
| | 3 | 0 | 0 | 0 | N/A | N/A | 0 | 0 | 0 | N/A | N/A | | 0 | 0 | 0 | N/A | N/A | |
| | 4 | 0 | 0 | 0 | N/A | N/A | 0 | 0 | 0 | N/A | N/A | | 0 | 0 | 0 | N/A | N/A | |
| | 5 | 0 | 0 | 0 | N/A | N/A | 0 | 0 | 0 | N/A | N/A | | 0 | 0 | 0 | N/A | N/A | |
| | 6 | 25 | 30 | 1140 | 7 | B | 25 | 30 | 1164 | 7 | B | | 25 | 30 | 1164 | 7 | B | |
| | 7 | 18 | 23 | 1168 | 8 | C | 18 | 23 | 1248 | 9 | C | | 18 | 23 | 1248 | 9 | C | |
| | 8 | 18 | 23 | 1096 | 8 | C | 18 | 23 | 1147 | 8 | C | | 18 | 23 | 1147 | 8 | C | |
| ***Blvd @ 33rd St*** | 1 | 0 | 0 | 0 | N/A | N/A | 15 | 15 | 644 | 7 | B | | 15 | 15 | 644 | 7 | B | |
| | 2 | 0 | 0 | 0 | N/A | N/A | 15 | 18 | 229 | 5 | B | | 15 | 18 | 229 | 5 | B | |
| | 3 | 0 | 0 | 0 | N/A | N/A | 15 | 18 | 882 | 8 | C | | 15 | 18 | 882 | 8 | C | |
| | 4 | 0 | 0 | 0 | N/A | N/A | 10 | 13 | 3198 | 25 | E | | 30 | 35 | 3198 | 11 | D | |
| | 5 | 0 | 0 | 0 | N/A | N/A | 0 | 0 | 0 | N/A | N/A | | 0 | 0 | 0 | N/A | N/A | |
| | 6 | 0 | 0 | 0 | N/A | N/A | 0 | 0 | 0 | N/A | N/A | | 0 | 0 | 0 | N/A | N/A | |
| | 7 | 0 | 0 | 0 | N/A | N/A | 10 | 13 | 2195 | 19 | E | | 30 | 35 | 2195 | 9 | C | |
| | 8 | 0 | 0 | 0 | N/A | N/A | 15 | 18 | 956 | 8 | C | | 15 | 18 | 956 | 8 | C | |
| ***Blvd @ 34th St*** | 1 | 0 | 0 | 0 | N/A | N/A | 15 | 18 | 441 | 6 | B | | 15 | 18 | 441 | 6 | B | |
| | 2 | 0 | 0 | 0 | N/A | N/A | 15 | 18 | 408 | 6 | B | | 15 | 18 | 408 | 6 | B | |
| | 3 | 0 | 0 | 0 | N/A | N/A | 26 | 30 | 221 | 5 | B | | 26 | 30 | 221 | 5 | B | |
| | 4 | 0 | 0 | 0 | N/A | N/A | 26 | 30 | 232 | 5 | B | | 26 | 30 | 232 | 5 | B | |
| | 5 | 0 | 0 | 0 | N/A | N/A | 15 | 18 | 247 | 5 | B | | 15 | 18 | 247 | 5 | B | |
| | 6 | 0 | 0 | 0 | N/A | N/A | 15 | 18 | 374 | 6 | B | | 15 | 18 | 374 | 6 | B | |
| | 7 | 0 | 0 | 0 | N/A | N/A | 26 | 30 | 708 | 6 | B | | 26 | 30 | 708 | 6 | B | |
| | 8 | 0 | 0 | 0 | N/A | N/A | 26 | 30 | 341 | 5 | B | | 26 | 30 | 341 | 5 | B | |
| ***N.Blvd @ 35th St*** | 1 | 0 | 0 | 0 | N/A | N/A | 0 | 0 | 0 | N/A | N/A | | 0 | 0 | 0 | N/A | N/A | |
| | 2 | 0 | 0 | 0 | N/A | N/A | 15 | 18 | 349 | 6 | B | | 15 | 18 | 349 | 6 | B | |
| | 3 | 0 | 0 | 0 | N/A | N/A | 20 | 24 | 127 | 4 | B | | 20 | 24 | 127 | 4 | B | |
| | 4 | 0 | 0 | 0 | N/A | N/A | 15 | 18 | 470 | 6 | B | | 15 | 18 | 470 | 6 | B | |
| | 5 | 0 | 0 | 0 | N/A | N/A | 15 | 18 | 424 | 6 | B | | 15 | 18 | 424 | 6 | B | |
| | 6 | 0 | 0 | 0 | N/A | N/A | 15 | 18 | 486 | 6 | B | | 15 | 18 | 486 | 6 | B | |
| | 7 | 0 | 0 | 0 | N/A | N/A | 15 | 18 | 167 | 5 | B | | 15 | 18 | 167 | 5 | B | |
| | 8 | 0 | 0 | 0 | N/A | N/A | 0 | 0 | 0 | N/A | N/A | | 0 | 0 | 0 | N/A | N/A | |

# Appendix S.5.3

**Pedestrian Improvement Analysis - Sidewalks Level of Service**

**2025 Future Conditions (SUN)**

| Intersection | Walkway Location | 2025 Future without the Proposed Action | | | | | 2025 Future with the Proposed Action | | | | | | 2025 Future with the Proposed Action (Improvement) | | | | | |
|---|---|---|---|---|---|---|---|---|---|---|---|---|---|---|---|---|---|---|
| | | Effective Walkway width | Actual walkway width | Sidewalk Volumes | Platoon Flow Rate (ped/min/ft) | Platoon Level of Service | Effective Walkway width | Actual walkway width | Sidewalk Volumes | Platoon Flow Rate (ped/min/ft) | Platoon Level of Service | Impact? | Proposed Effective Walkwa | Proposed Actual walkway width | Sidewalk Volumes | Platoon Flow Rate (ped/min/ft) | Platoon Level of Service | Still Impact? |
| ***N.Blvd @ 36th St*** | 1 | 0 | 0 | 0 | N/A | N/A | 0 | 0 | 0 | N/A | N/A | | 0 | 0 | 0 | N/A | N/A | |
| | 2 | 0 | 0 | 0 | N/A | N/A | 15 | 18 | 250 | 5 | B | | 15 | 18 | 250 | 5 | B | |
| | 3 | 0 | 0 | 0 | N/A | N/A | 18 | 22 | 140 | 5 | B | | 18 | 22 | 140 | 5 | B | |
| | 4 | 0 | 0 | 0 | N/A | N/A | 15 | 18 | 355 | 6 | B | | 15 | 18 | 355 | 6 | B | |
| | 5 | 0 | 0 | 0 | N/A | N/A | 15 | 18 | 335 | 5 | B | | 15 | 18 | 335 | 5 | B | |
| | 6 | 0 | 0 | 0 | N/A | N/A | 0 | 0 | 0 | N/A | N/A | | 0 | 0 | 0 | N/A | N/A | |
| | 7 | 0 | 0 | 0 | N/A | N/A | 0 | 0 | 0 | N/A | N/A | | 0 | 0 | 0 | N/A | N/A | |
| | 8 | 0 | 0 | 0 | N/A | N/A | 0 | 0 | 0 | N/A | N/A | | 0 | 0 | 0 | N/A | N/A | |
| ***N.Blvd @ 37th St*** | 1 | 0 | 0 | 0 | N/A | N/A | 0 | 0 | 0 | N/A | N/A | | 0 | 0 | 0 | N/A | N/A | |
| | 2 | 0 | 0 | 0 | N/A | N/A | 15 | 18 | 254 | 5 | B | | 15 | 18 | 254 | 5 | B | |
| | 3 | 0 | 0 | 0 | N/A | N/A | 18 | 22 | 207 | 5 | B | | 18 | 22 | 207 | 5 | B | |
| | 4 | 0 | 0 | 0 | N/A | N/A | 14 | 17 | 71 | 4 | B | | 14 | 17 | 71 | 4 | B | |
| | 5 | 0 | 0 | 0 | N/A | N/A | 15 | 18 | 261 | 5 | B | | 15 | 18 | 261 | 5 | B | |
| | 6 | 0 | 0 | 0 | N/A | N/A | 0 | 0 | 0 | N/A | N/A | | 0 | 0 | 0 | N/A | N/A | |
| | 7 | 0 | 0 | 0 | N/A | N/A | 0 | 0 | 0 | N/A | N/A | | 0 | 0 | 0 | N/A | N/A | |
| | 8 | 0 | 0 | 0 | N/A | N/A | 0 | 0 | 0 | N/A | N/A | | 0 | 0 | 0 | N/A | N/A | |
| ***Blvd @ 38th St*** | 1 | 0 | 0 | 0 | N/A | N/A | 15 | 18 | 258 | 5 | B | | 15 | 18 | 258 | 5 | B | |
| | 2 | 0 | 0 | 0 | N/A | N/A | 15 | 18 | 265 | 5 | B | | 15 | 18 | 265 | 5 | B | |
| | 3 | 0 | 0 | 0 | N/A | N/A | 18 | 22 | 108 | 4 | B | | 18 | 22 | 108 | 4 | B | |
| | 4 | 0 | 0 | 0 | N/A | N/A | 14 | 17 | 103 | 4 | B | | 14 | 17 | 103 | 4 | B | |
| | 5 | 0 | 0 | 0 | N/A | N/A | 15 | 18 | 248 | 5 | B | | 15 | 18 | 248 | 5 | B | |
| | 6 | 0 | 0 | 0 | N/A | N/A | 15 | 18 | 238 | 5 | B | | 15 | 18 | 238 | 5 | B | |
| | 7 | 0 | 0 | 0 | N/A | N/A | 14 | 17 | 110 | 5 | B | | 14 | 17 | 110 | 5 | B | |
| | 8 | 0 | 0 | 0 | N/A | N/A | 18 | 22 | 129 | 4 | B | | 18 | 22 | 129 | 4 | B | |
| ***S.Blvd @ 35th St*** | 1 | 0 | 0 | 0 | N/A | N/A | 15 | 18 | 331 | 5 | B | | 15 | 18 | 331 | 5 | B | |
| | 2 | 0 | 0 | 0 | N/A | N/A | 0 | 0 | 0 | N/A | N/A | | 0 | 0 | 0 | N/A | N/A | |
| | 3 | 0 | 0 | 0 | N/A | N/A | 0 | 0 | 0 | N/A | N/A | | 0 | 0 | 0 | N/A | N/A | |
| | 4 | 0 | 0 | 0 | N/A | N/A | 0 | 0 | 0 | N/A | N/A | | 0 | 0 | 0 | N/A | N/A | |
| | 5 | 0 | 0 | 0 | N/A | N/A | 0 | 0 | 0 | N/A | N/A | | 0 | 0 | 0 | N/A | N/A | |
| | 6 | 0 | 0 | 0 | N/A | N/A | 0 | 0 | 0 | N/A | N/A | | 0 | 0 | 0 | N/A | N/A | |
| | 7 | 0 | 0 | 0 | N/A | N/A | 15 | 18 | 167 | 5 | B | | 15 | 18 | 167 | 5 | B | |
| | 8 | 0 | 0 | 0 | N/A | N/A | 20 | 24 | 187 | 5 | B | | 20 | 24 | 187 | 5 | B | |
| ***S.Blvd @ 36th St*** | 1 | 0 | 0 | 0 | N/A | N/A | 15 | 18 | 226 | 5 | B | | 15 | 18 | 226 | 5 | B | |
| | 2 | 0 | 0 | 0 | N/A | N/A | 0 | 0 | 0 | N/A | N/A | | 0 | 0 | 0 | N/A | N/A | |
| | 3 | 0 | 0 | 0 | N/A | N/A | 0 | 0 | 0 | N/A | N/A | | 0 | 0 | 0 | N/A | N/A | |
| | 4 | 0 | 0 | 0 | N/A | N/A | 0 | 0 | 0 | N/A | N/A | | 0 | 0 | 0 | N/A | N/A | |
| | 5 | 0 | 0 | 0 | N/A | N/A | 0 | 0 | 0 | N/A | N/A | | 0 | 0 | 0 | N/A | N/A | |
| | 6 | 0 | 0 | 0 | N/A | N/A | 15 | 18 | 290 | 5 | B | | 15 | 18 | 290 | 5 | B | |
| | 7 | 0 | 0 | 0 | N/A | N/A | 15 | 18 | 215 | 5 | B | | 15 | 18 | 215 | 5 | B | |
| | 8 | 0 | 0 | 0 | N/A | N/A | 18 | 22 | 141 | 5 | B | | 18 | 22 | 141 | 5 | B | |
| ***S.Blvd @ 37th St*** | 1 | 0 | 0 | 0 | N/A | N/A | 15 | 18 | 228 | 5 | B | | 15 | 18 | 228 | 5 | B | |
| | 2 | 0 | 0 | 0 | N/A | N/A | 0 | 0 | 0 | N/A | N/A | | 0 | 0 | 0 | N/A | N/A | |
| | 3 | 0 | 0 | 0 | N/A | N/A | 0 | 0 | 0 | N/A | N/A | | 0 | 0 | 0 | N/A | N/A | |
| | 4 | 0 | 0 | 0 | N/A | N/A | 0 | 0 | 0 | N/A | N/A | | 0 | 0 | 0 | N/A | N/A | |
| | 5 | 0 | 0 | 0 | N/A | N/A | 0 | 0 | 0 | N/A | N/A | | 0 | 0 | 0 | N/A | N/A | |
| | 6 | 0 | 0 | 0 | N/A | N/A | 15 | 18 | 254 | 5 | B | | 15 | 18 | 254 | 5 | B | |
| | 7 | 0 | 0 | 0 | N/A | N/A | 14 | 17 | 87 | 4 | B | | 14 | 17 | 87 | 4 | B | |
| | 8 | 0 | 0 | 0 | N/A | N/A | 18 | 22 | 139 | 5 | B | | 18 | 22 | 139 | 5 | B | |

**Appendix S.5.4**
**Existing Conditions: Corners Level of Service**

| | | | AM | | MD | | PM | | SE-EVE | | SE-SUN | |
|---|---|---|---|---|---|---|---|---|---|---|---|---|
| Intersection | Corner | Curb Radii | SF/P | LOS | SF/P | LOS | SF/P | LOS | SF/P | LOS | SF/P | LOS |
| Twelfth Ave @ 30th St | Northeast | 13 | 11987 | A | 7991 | A | 2995 | A | 2665 | A | 3417 | A |
| | Southeast | 13 | 3952 | A | 7128 | A | 5092 | A | 7116 | A | 4450 | A |
| Twelfth Ave @ 34th St | Northeast | 12 | 8319 | A | 2311 | A | 1734 | A | 5942 | A | 4160 | A |
| | Southeast | 12 | 3779 | A | 2971 | A | 1978 | A | 8306 | A | 4611 | A |
| Twelfth Ave @ 39th St | Northeast | 12 | 15502 | A | 3442 | A | 6202 | A | 6201 | A | 2381 | A |
| | Southeast | 12 | 2663 | A | 3496 | A | 3024 | A | 3023 | A | 1090 | A |
| Twelfth Ave @ 40th St | Northeast | 12 | 6297 | A | 4195 | A | 6298 | A | | | | |
| | Southeast | 10 | 5473 | A | 4702 | A | 5478 | A | | | | |
| Twelfth Ave @ 42nd St | Northeast | 14 | 2210 | A | 1602 | A | 1173 | A | | | | |
| | Southeast | 13 | 3601 | A | 6381 | A | 3196 | A | | | | |
| Eleventh Ave @ 29th St | Northeast | 15 | 5487 | A | 2350 | A | 4115 | A | | | | |
| | Southeast | 15 | 4710 | A | 1828 | A | 2195 | A | | | | |
| | Southwest | 15 | 10991 | A | 3658 | A | 1933 | A | | | | |
| | Northwest | 15 | 5490 | A | 3654 | A | 2189 | A | | | | |
| Eleventh Ave @ 30th St | Northeast | 15 | 4708 | A | 763 | A | 1432 | A | 4710 | A | 16487 | A |
| | Southeast | 15 | 5496 | A | 940 | A | 1427 | A | 6591 | A | 5496 | A |
| | Southwest | 15 | 5493 | A | 866 | A | 1828 | A | 5487 | A | 8239 | A |
| | Northwest | 15 | 4122 | A | 630 | A | 1318 | A | 6588 | A | 16478 | A |
| Eleventh Ave @ 33rd St | Northeast | 15 | 4122 | A | 3657 | A | 2199 | A | 2536 | A | 4706 | A |
| | Southeast | 15 | 5496 | A | 3657 | A | 3658 | A | 8233 | A | 4708 | A |
| | Southwest | 15 | 2743 | A | 5489 | A | 5492 | A | 6596 | A | 6591 | A |
| | Northwest | 15 | 2739 | A | 5491 | A | 5484 | A | 8231 | A | 5486 | A |
| Eleventh Ave @ 34th St | Northeast | 15 | 1653 | A | 1473 | A | 1949 | A | 2682 | A | 911 | A |
| | Southeast | 18 | 1719 | A | 1989 | A | 2586 | A | 1328 | A | 2151 | A |
| | Southwest | 18 | 4308 | A | 2057 | A | 2863 | A | 2578 | A | 2864 | A |
| | Northwest | 18 | 4701 | A | 1987 | A | 3039 | A | 3230 | A | 1344 | A |
| Eleventh Ave @ 35th St | Northeast | 11 | 5909 | A | 4128 | A | 5166 | A | | | | |
| | Southeast | 11 | 4788 | A | 4106 | A | 7190 | A | | | | |
| Eleventh Ave @ 36th St | Northeast | 11 | 4081 | A | 3401 | A | 2547 | A | | | | |
| | Southeast | 14 | 4034 | A | 3453 | A | 2195 | A | | | | |
| Eleventh Ave @ 37th St | Northeast | 15 | 3210 | A | 1607 | A | 1461 | A | | | | |
| | Southeast | 15 | 8054 | A | 688 | A | 3209 | A | | | | |
| Eleventh Ave @ 38th St | Northeast | 15 | 3450 | A | 571 | A | 3450 | A | | | | |
| | Southeast | 15 | 3450 | A | 1134 | A | 1361 | A | | | | |
| Eleventh Ave @ 39th St | Northeast | 11 | 2640 | A | 875 | A | 2113 | A | 3018 | A | 1509 | A |
| | Southeast | 12 | 2527 | A | 2529 | A | 1968 | A | 1256 | A | 771 | A |
| | Southwest | 13 | 451 | A | 3564 | A | 5095 | A | 1780 | A | 1005 | A |
| | Northwest | 12 | 492 | A | 1478 | A | 4024 | A | 1546 | A | 1428 | A |
| Eleventh Ave @ 40th St | Northeast | 15 | 964 | A | 1666 | A | 4588 | A | | | | |
| | Southeast | 15 | 1076 | A | 1400 | A | 902 | A | | | | |
| | Southwest | 15 | 1097 | A | 1733 | A | 932 | A | | | | |
| | Northwest | 15 | 865 | A | 1644 | A | 1733 | A | | | | |
| Eleventh Ave @ 42nd St | Northeast | 13 | 1460 | A | 1135 | A | 949 | A | 873 | A | 908 | A |
| | Southeast | 12 | 795 | A | 991 | A | 934 | A | 833 | A | 761 | A |
| | Southwest | 12 | 683 | A | 1556 | A | 774 | A | 1371 | A | 842 | A |
| | Northwest | 12 | 1202 | A | 2018 | A | 918 | A | 1673 | A | 1441 | A |
| Tenth Ave @ 29th St | Northeast | 15 | 1424 | A | 860 | A | 1364 | A | | | | |
| | Southeast | 15 | 1314 | A | 761 | A | 1311 | A | | | | |
| | Southwest | 15 | 1092 | A | 940 | A | 937 | A | | | | |
| | Northwest | 15 | 1371 | A | 1056 | A | 889 | A | | | | |
| Tenth Ave @ 30th St | Northeast | 13 | 2093 | A | 2971 | A | 3554 | A | 3959 | A | 5097 | A |
| | Southeast | 15 | 1646 | A | 2326 | A | 2833 | A | 3306 | A | 4959 | A |
| | Southwest | 11 | 2429 | A | 2430 | A | 1644 | A | 2950 | A | 3176 | A |
| | Northwest | 13 | 3830 | A | 3242 | A | 1755 | A | 3830 | A | 2808 | A |
| Tenth Ave @ 31st St | Northeast | 10 | 1391 | A | 972 | A | 1621 | A | 4325 | A | 5574 | A |
| | Southeast | 11 | 1896 | A | 1460 | A | 1460 | A | 3796 | A | 5421 | A |
| Tenth Ave @ 33rd St | Northeast | 12 | 662 | A | 222 | A | 964 | A | 1144 | A | 3684 | A |
| | Southeast | 9 | 842 | A | 512 | A | 758 | A | 1416 | A | 3991 | A |
| | Southwest | 12 | 1109 | A | 383 | A | 763 | A | 3349 | A | 2301 | A |
| | Northwest | 10 | 881 | A | 207 | A | 947 | A | 2436 | A | 1945 | A |
| Tenth Ave @ 34th St | Northeast | 20 | 404 | A | 421 | A | 451 | A | 794 | A | 1225 | A |
| | Southeast | 20 | 398 | A | 267 | A | 343 | A | 516 | A | 1496 | A |
| | Southwest | 20 | 487 | A | 316 | A | 345 | A | 685 | A | 1774 | A |
| | Northwest | 20 | 432 | A | 361 | A | 458 | A | 1062 | A | 1328 | A |
| Tenth Ave @ 35th St | Northeast | 12 | 660 | A | 538 | A | 447 | A | | | | |
| | Southeast | 12 | 738 | A | 355 | A | 353 | A | | | | |
| | Southwest | 12 | 815 | A | 364 | A | 454 | A | | | | |
| | Northwest | 12 | 610 | A | 369 | A | 446 | A | | | | |
| Tenth Ave @ 36th St | Northeast | 9 | 337 | A | 886 | A | 673 | A | | | | |
| | Southeast | 11 | 192 | A | 741 | A | 294 | A | | | | |
| | Southwest | 11 | 251 | A | 534 | A | 230 | A | | | | |
| | Northwest | 12 | 409 | A | 507 | A | 418 | A | | | | |
| Tenth Ave @ 37th St | Northeast | 15 | 438 | A | 597 | A | 553 | A | | | | |
| | Southeast | 15 | 475 | A | 449 | A | 769 | A | | | | |
| | Southwest | 15 | 838 | A | 512 | A | 717 | A | | | | |
| | Northwest | 15 | 598 | A | 609 | A | 678 | A | | | | |

**Appendix S.5.4**
**Existing Conditions: Corners Level of Service**

| Intersection | Corner | Curb Radii | AM | | MD | | PM | | SE-EVE | | SE-SUN | |
|---|---|---|---|---|---|---|---|---|---|---|---|---|
| | | | SF/P | LOS | SF/P | LOS | SF/P | LOS | SF/P | LOS | SF/P | LOS |
| Tenth Ave @ 38th St | Northeast | 15 | 1637 | A | 530 | A | 892 | A | | | | |
| | Southeast | 15 | 3285 | A | 732 | A | 865 | A | | | | |
| | Southwest | 15 | 2115 | A | 839 | A | 834 | A | | | | |
| | Northwest | 15 | 1399 | A | 623 | A | 916 | A | | | | |
| Tenth Ave @ 39th St | Northeast | 15 | 1847 | A | 1734 | A | 1556 | A | | | | |
| | Southeast | 15 | 1087 | A | 1403 | A | 890 | A | | | | |
| | Southwest | 15 | 2997 | A | 2350 | A | 1019 | A | | | | |
| | Northwest | 15 | 3254 | A | 2532 | A | 1197 | A | | | | |
| Tenth Ave @ 40th St | Northeast | 15 | 917 | A | 1739 | A | 638 | A | | | | |
| | Southeast | 15 | 1091 | A | 2465 | A | 1132 | A | | | | |
| | Southwest | 15 | 5495 | A | 2352 | A | 1559 | A | | | | |
| | Northwest | 15 | 4113 | A | 1827 | A | 1134 | A | | | | |
| Tenth Ave @ 41st St | Northeast | 12.3 | 660 | A | 531 | A | 497 | A | | | | |
| | Southeast | 11.5 | 1569 | A | 764 | A | 736 | A | | | | |
| | Southwest | 13 | 2001 | A | 1573 | A | 960 | A | | | | |
| | Northwest | 10.5 | 912 | A | 1359 | A | 826 | A | | | | |
| Tenth Ave @ 42nd St | Northeast | 11.5 | 584 | A | 620 | A | 405 | A | | | | |
| | Southeast | 12.2 | 484 | A | 532 | A | 274 | A | | | | |
| | Southwest | 11 | 438 | A | 458 | A | 415 | A | | | | |
| | Northwest | 15 | 365 | A | 394 | A | 308 | A | | | | |
| Dyer @ 42nd St | Southeast | 19.6 | 73 | B | 63 | B | 33 | C | | | | |
| | Southwest | 10 | 174 | A | 144 | A | 76 | B | | | | |
| Ninth Ave @ 30th St | Northeast | 11 | 230 | A | 327 | A | 287 | A | 576 | A | 346 | A |
| | Southeast | 10 | 207 | A | 303 | A | 253 | A | 617 | A | 244 | A |
| | Southwest | 15.8 | 97 | B | 408 | A | 319 | A | 869 | A | 173 | A |
| | Northwest | 12 | 117 | B | 528 | A | 494 | A | 879 | A | 360 | A |
| Ninth Ave @ 31st St | Northeast | 15 | 185 | A | 346 | A | 126 | B | 707 | A | 161 | A |
| | Southeast | 15 | 99 | B | 303 | A | 137 | A | 546 | A | 400 | A |
| | Southwest | 15 | 156 | A | 130 | A | 193 | A | 936 | A | 840 | A |
| | Northwest | 15 | 375 | A | 277 | A | 163 | A | 1091 | A | 512 | A |
| Ninth Ave @ 33rd St | Northeast | 15 | 108 | B | 82 | B | 109 | B | 368 | A | 166 | A |
| | Southeast | 15 | 64 | B | 104 | B | 61 | B | 337 | A | 261 | A |
| | Southwest | 15 | 82 | B | 104 | B | 98 | B | 588 | A | 513 | A |
| | Northwest | 15 | 118 | B | 99 | B | 164 | A | 840 | A | 421 | A |
| Ninth Ave @ 34th St | Northeast | 20 | 91 | B | 169 | A | 75 | B | 341 | A | 260 | A |
| | Southeast | 20 | 86 | B | 113 | B | 83 | B | 294 | A | 173 | A |
| | Southwest | 20 | 87 | B | 96 | B | 84 | B | 393 | A | 332 | A |
| | Northwest | 20 | 83 | B | 119 | B | 68 | B | 492 | A | 488 | A |
| Ninth Ave @ 37th St | Northeast | 15 | 163 | A | 132 | A | 81 | B | | | | |
| | Southeast | 15 | 152 | A | 138 | A | 85 | B | | | | |
| | Southwest | 15 | 378 | A | 319 | A | 218 | A | | | | |
| | Northwest | 15 | 355 | A | 283 | A | 164 | A | | | | |
| Ninth Ave @ 38th St | Northeast | 15 | 156 | A | 269 | A | 117 | B | | | | |
| | Southeast | 15 | 154 | A | 242 | A | 125 | B | | | | |
| | Southwest | 15 | 338 | A | 258 | A | 251 | A | | | | |
| | Northwest | 15 | 306 | A | 234 | A | 221 | A | | | | |
| Ninth Ave @ 39th St | Northeast | 15 | 161 | A | 157 | A | 86 | B | | | | |
| | Southeast | 15 | 177 | A | 145 | A | 90 | B | | | | |
| | Southwest | 15 | 372 | A | 375 | A | 205 | A | | | | |
| | Northwest | 15 | 298 | A | 373 | A | 166 | A | | | | |
| Ninth Ave @ 42nd St | Northeast | 12 | 31 | C | 30 | C | 13 | E | | | | |
| | Southeast | 12.5 | 110 | B | 100 | B | 76 | B | | | | |
| | Southwest | 15 | 147 | A | 124 | B | 86 | B | | | | |
| | Northwest | 12 | 179 | A | 159 | A | 82 | B | | | | |
| Eighth Ave @ 30th St | Northeast | 10.7 | 120 | B | 112 | B | 79 | B | 213 | A | 191 | A |
| | Southeast | 12 | 171 | A | 148 | A | 110 | B | 319 | A | 264 | A |
| | Southwest | 10.7 | 215 | A | 168 | A | 154 | A | 290 | A | 242 | A |
| | Northwest | 10.3 | 161 | A | 146 | A | 123 | B | 247 | A | 181 | A |
| Eighth Ave @ 31st St | Northeast | 15 | 572 | A | 589 | A | 562 | A | 676 | A | 882 | A |
| | Southeast | 15 | 81 | B | 82 | B | 82 | B | 133 | A | 119 | B |
| | Southwest | 15 | 109 | B | 76 | B | 81 | B | 124 | B | 157 | A |
| | Northwest | 15 | 116 | B | 94 | B | 93 | B | 182 | A | 221 | A |
| Eighth Ave @ 33rd St | Northeast | 15 | 75 | B | 59 | B | 43 | B | 109 | B | 102 | B |
| | Southeast | 15 | 483 | A | 346 | A | 322 | A | 699 | A | 575 | A |
| | Southwest | 15 | 16 | D | 32 | C | 27 | C | 44 | B | 89 | B |
| | Northwest | 15 | 24 | C | 50 | B | 26 | C | 59 | B | 98 | B |

**Appendix S.5.4**
**Existing Conditions: Corners Level of Service**

| Intersection | Corner | Curb Radii | AM | | MD | | PM | | SE-EVE | | SE-SUN | |
|---|---|---|---|---|---|---|---|---|---|---|---|---|
| | | | SF/P | LOS | SF/P | LOS | SF/P | LOS | SF/P | LOS | SF/P | LOS |
| Eighth Ave @ 34th St | Northeast | 15 | 100 | B | 62 | B | 48 | B | 27 | C | 97 | B |
| | Southeast | 15 | 104 | B | 75 | B | 70 | B | 21 | D | 87 | B |
| | Southwest | 15 | 105 | B | 80 | B | 73 | B | 28 | C | 85 | B |
| | Northwest | 15 | 106 | B | 66 | B | 58 | B | 124 | B | 121 | B |
| Eighth Ave @ 37th St | Northeast | 15 | 52 | B | 42 | B | 35 | C | | | | |
| | Southeast | 15 | 58 | B | 41 | B | 33 | C | | | | |
| | Southwest | 15 | 46 | B | 31 | C | 29 | C | | | | |
| | Northwest | 15 | 53 | B | 38 | C | 40 | B | | | | |
| Eighth Ave @ 38th St | Northeast | 15 | 102 | B | 63 | B | 444 | A | | | | |
| | Southeast | 15 | 121 | B | 55 | B | 239 | A | | | | |
| | Southwest | 15 | 85 | B | 62 | B | 246 | A | | | | |
| | Northwest | 15 | 63 | B | 56 | B | 492 | A | | | | |
| Eighth Ave @ 39th St | Northeast | 15 | 22 | D | 40 | B | 26 | C | | | | |
| | Southeast | 15 | 32 | C | 14 | E | 22 | D | | | | |
| | Southwest | 15 | 36 | C | 18 | D | 9 | E | | | | |
| | Northwest | 15 | 29 | C | 31 | C | 21 | D | | | | |
| Eighth Ave @ 42nd St | Northeast | 12 | 63 | B | 79 | B | 31 | C | | | | |
| | Southeast | 13 | 11 | E | 20 | D | -2 | F | | | | |
| | Southwest | 12 | 72 | B | 197 | A | 73 | B | | | | |
| | Northwest | 14 | 34 | C | 76 | B | 11 | E | | | | |
| Seventh Ave @ 31st St | Northeast | 15 | 55 | B | 67 | B | 41 | B | | | | |
| | Southeast | 15 | 59 | B | 60 | B | 33 | C | | | | |
| | Southwest | 15 | 53 | B | 87 | B | 32 | C | | | | |
| | Northwest | 15 | 74 | B | 147 | A | 62 | B | | | | |
| Seventh Ave @ 33rd St | Northeast | 15 | 40 | B | 43 | B | 29 | C | | | | |
| | Southeast | 15 | 30 | C | 36 | C | 30 | C | | | | |
| | Southwest | 15 | 258 | A | 300 | A | 268 | A | | | | |
| | Northwest | 15 | 42 | B | 50 | B | 35 | C | | | | |
| Seventh Ave @ 34th St | Northeast | 15 | 84 | B | 57 | B | 77 | B | | | | |
| | Southeast | 15 | 80 | B | 76 | B | 83 | B | | | | |
| | Southwest | 15 | 40 | B | 76 | B | 88 | B | | | | |
| | Northwest | 15 | 43 | B | 51 | B | 68 | B | | | | |
| Sixth Ave @ 33rd St | Northeast | 15 | 84 | B | 59 | B | 36 | C | | | | |
| | Southeast | 15 | 76 | B | 61 | B | 28 | C | | | | |
| | Southwest | 15 | 47 | B | 40 | B | 23 | D | | | | |
| | Northwest | 15 | 88 | B | 65 | B | 50 | B | | | | |
| Sixth Ave @ 34th St | Northeast | 15 | 48 | B | 19 | D | 21 | D | 81 | B | 40 | B |
| | Southeast | 15 | 52 | B | 21 | D | 24 | C | 75 | B | 42 | B |
| Broadway @ 34th St | Southwest | 15 | 83 | B | 33 | C | 31 | C | 127 | B | 113 | B |
| | Northwest | 15 | 57 | B | 32 | C | 34 | C | 138 | A | 100 | B |

# Appendix S.5.4

**Pedestrian Improvement Analysis - Corner Level of Service**

**2010 Future Conditions (AM)**

| Intersection | Corner Location | 2010 Future without the Proposed Action | | | | | | 2010 Future with the Proposed Action | | | | | | | 2010 Future with the Proposed Action (Improvement) | | | | | |
|---|---|---|---|---|---|---|---|---|---|---|---|---|---|---|---|---|---|---|---|---|
| | | Sidewalk Width for No Build Condition | | | | Pedestrian Flow Rate (s.f./ped.) | Level of Service | Sidewalk Width for Build Condition | | | | Pedestrian Green | Pedestrian Flow Rate (s.f./ped.) | Level of Service | Impact? | Proposed Sidewalk Width Improvement | | Signal Timing | Pedestrian Flow Rate (s.f./ped.) | Level of Service | Still Impact? |
| ***Twelfth Ave @ 30th St*** | NORTHEAST | 1 | | 5 | 15 | 11987 | A | 1 | | 5 | 15 | 24 | 5990 | A | | 1 | 5 | | 11994 | A | |
| | SOUTHEAST | 2 | 11 | 6 | | 3952 | A | 2 | 11 | 6 | | 95 | 2963 | A | | 2 | 6 | | 3555 | A | |
| | SOUTHWEST | 3 | 13 | 7 | | N/A | N/A | 3 | 13 | 7 | | 24 | N/A | N/A | | 3 | 7 | | N/A | N/A | |
| | NORTHWEST | 4 | 13 | 8 | | N/A | N/A | 4 | 13 | 8 | | 95 | N/A | N/A | | 4 | 8 | | N/A | N/A | |
| ***Twelfth Ave @ 34th St*** | NORTHEAST | 1 | | 5 | 12 | 8319 | A | 1 | | 5 | 12 | 29 | 4615 | A | | 1 | 5 | 33 | 5938 | A | |
| | SOUTHEAST | 2 | 12 | 6 | | 750 | A | 2 | 12 | 6 | | 80 | 686 | A | | 2 | 6 | 76 | 711 | A | |
| | SOUTHWEST | 3 | 18 | 7 | | N/A | N/A | 3 | 18 | 7 | | 29 | N/A | N/A | | 3 | 7 | 33 | N/A | N/A | |
| | NORTHWEST | 4 | 18 | 8 | | N/A | N/A | 4 | 18 | 8 | | 80 | N/A | N/A | | 4 | 8 | 76 | N/A | N/A | |
| ***Twelfth Ave @ 39th St*** | NORTHEAST | 1 | | 5 | 18 | 15502 | A | 1 | | 5 | 18 | 30 | N/A | N/A | | 1 | 5 | | N/A | N/A | |
| | SOUTHEAST | 2 | 13 | 6 | | 1036 | A | 2 | 13 | 6 | | 69 | N/A | N/A | | 2 | 6 | 95 | N/A | N/A | |
| | SOUTHWEST | 3 | 13 | 7 | | N/A | N/A | 3 | | 7 | | 30 | N/A | N/A | | 3 | 7 | | N/A | N/A | |
| | NORTHWEST | 4 | 13 | 8 | | N/A | N/A | 4 | | 8 | | 69 | N/A | N/A | | 4 | 8 | 95 | N/A | N/A | |
| ***Twelfth Ave @ 40th St*** | NORTHEAST | 1 | | 5 | 14 | 6297 | A | 1 | | 5 | 14 | 0 | N/A | N/A | | 1 | 5 | | N/A | N/A | |
| | SOUTHEAST | 2 | 13 | 6 | | 5473 | A | 2 | 13 | 6 | | 71 | N/A | N/A | | 2 | 6 | | N/A | N/A | |
| | SOUTHWEST | 3 | 11 | 7 | | N/A | N/A | 3 | | 7 | | 0 | N/A | N/A | | 3 | 7 | | N/A | N/A | |
| | NORTHWEST | 4 | 12 | 8 | | N/A | N/A | 4 | | 8 | | 71 | N/A | N/A | | 4 | 8 | | N/A | N/A | |
| ***Twelfth Ave @ 42nd St*** | NORTHEAST | 1 | | 5 | 20 | 791 | A | 1 | | 5 | 20 | 33 | 727 | A | | 1 | 5 | | 727 | A | |
| | SOUTHEAST | 2 | 20 | 6 | | 1507 | A | 2 | 20 | 6 | | 69 | 1408 | A | | 2 | 6 | | 1408 | A | |
| | SOUTHWEST | 3 | 15 | 7 | | N/A | N/A | 3 | 15 | 7 | | 33 | N/A | N/A | | 3 | 7 | | N/A | N/A | |
| | NORTHWEST | 4 | 26 | 8 | | N/A | N/A | 4 | 26 | 8 | | 0 | N/A | N/A | | 4 | 8 | | N/A | N/A | |
| ***Eleventh Ave @ 29th St*** | NORTHEAST | 1 | 15 | 5 | 15 | 2055 | A | 1 | 15 | 5 | 15 | 40 | 391 | A | | 1 | 5 | | 391 | A | |
| | SOUTHEAST | 2 | 15 | 6 | 15 | 1726 | A | 2 | 15 | 6 | 15 | 40 | 903 | A | | 2 | 6 | | 903 | A | |
| | SOUTHWEST | 3 | 13 | 7 | 13 | 4117 | A | 3 | 13 | 7 | 13 | 40 | 2347 | A | | 3 | 7 | | 2347 | A | |
| | NORTHWEST | 4 | 13 | 8 | 13 | 3658 | A | 4 | 13 | 8 | 13 | 40 | 822 | A | | 4 | 8 | | 822 | A | |
| ***Eleventh Ave @ 30th St*** | NORTHEAST | 1 | 15 | 5 | 15 | 1937 | A | 1 | 15 | 5 | 15 | 40 | 560 | A | | 1 | 5 | | 560 | A | |
| | SOUTHEAST | 2 | 15 | 6 | 15 | 2990 | A | 2 | 15 | 6 | 15 | 40 | 675 | A | | 2 | 6 | | 675 | A | |
| | SOUTHWEST | 3 | 13 | 7 | 13 | 2743 | A | 3 | 13 | 7 | 13 | 40 | 401 | A | | 3 | 7 | | 401 | A | |
| | NORTHWEST | 4 | 13 | 8 | 13 | 1934 | A | 4 | 13 | 8 | 13 | 40 | 357 | A | | 4 | 8 | | 357 | A | |
| ***Eleventh Ave @ 33rd St*** | NORTHEAST | 1 | 15 | 5 | 15 | 1136 | A | 1 | 15 | 5 | 15 | 25 | 347 | A | | 1 | 5 | | 347 | A | |
| | SOUTHEAST | 2 | 15 | 6 | 15 | 2352 | A | 2 | 15 | 6 | 15 | 55 | 451 | A | | 2 | 6 | | 451 | A | |
| | SOUTHWEST | 3 | 13 | 7 | 13 | 2743 | A | 3 | 13 | 7 | | 25 | N/A | N/A | | 3 | 7 | | N/A | N/A | |
| | NORTHWEST | 4 | 13 | 8 | 13 | 2739 | A | 4 | 13 | 8 | | 55 | N/A | N/A | | 4 | 8 | | N/A | N/A | |
| ***Eleventh Ave @ 34th St*** | NORTHEAST | 1 | 15 | 5 | 15 | 688 | A | 1 | 15 | 5 | 15 | 22 | 391 | A | | 1 | 5 | 41 | 393 | A | |
| | SOUTHEAST | 2 | 12 | 6 | 15 | 764 | A | 2 | 17 | 6 | 15 | 58 | 232 | A | | 2 | 6 | 39 | 233 | A | |
| | SOUTHWEST | 3 | 20 | 7 | 20 | 1026 | A | 3 | 30 | 7 | 20 | 22 | 252 | A | | 3 | 7 | 41 | 250 | A | |
| | NORTHWEST | 4 | 20 | 8 | 20 | 1025 | A | 4 | 20 | 8 | 20 | 58 | 199 | A | | 4 | 8 | 39 | 204 | A | |
| ***Eleventh Ave @ 35th St*** | NORTHEAST | 1 | 19 | 5 | 11 | 2427 | A | 1 | 19 | 5 | 16 | 40 | 119 | B | | 1 | 5 | | 119 | B | |
| | SOUTHEAST | 2 | 15 | 6 | 15 | 1791 | A | 2 | 15 | 6 | 15 | 40 | 161 | A | | 2 | 6 | | 161 | A | |
| | SOUTHWEST | 3 | 14 | 7 | | N/A | N/A | 3 | 14 | 7 | | 40 | N/A | N/A | | 3 | 7 | | N/A | N/A | |
| | NORTHWEST | 4 | 14 | 8 | | N/A | N/A | 4 | 19 | 8 | | 40 | N/A | N/A | | 4 | 8 | | N/A | N/A | |
| ***Eleventh Ave @ 36th St*** | NORTHEAST | 1 | 15 | 5 | 15 | 1557 | A | 1 | 15 | 5 | 15 | 22 | 308 | A | | 1 | 5 | | 308 | A | |
| | SOUTHEAST | 2 | 9 | 6 | 17 | 1722 | A | 2 | 9 | 6 | 17 | 22 | 172 | A | | 2 | 6 | | 172 | A | |
| | SOUTHWEST | 3 | 13 | 7 | | N/A | N/A | 3 | 13 | 7 | | 22 | N/A | N/A | | 3 | 7 | | N/A | N/A | |
| | NORTHWEST | 4 | 10 | 8 | | N/A | N/A | 4 | 10 | 8 | | 0 | N/A | N/A | | 4 | 8 | | N/A | N/A | |

# Appendix S.5.4

**Pedestrian Improvement Analysis - Corner Level of Service**

**2010 Future Conditions (AM)**

| Intersection | Corner Location | 2010 Future without the Proposed Action | | | | | | 2010 Future with the Proposed Action | | | | | | | 2010 Future with the Proposed Action (Improvement) | | | | | |
|---|---|---|---|---|---|---|---|---|---|---|---|---|---|---|---|---|---|---|---|---|
| | | Sidewalk Width for No Build Condition | | | | Pedestrian Flow Rate (s.f./ped.) | Level of Service | Sidewalk Width for Build Condition | | | | Pedestrian Green | Pedestrian Flow Rate (s.f./ped.) | Level of Service | Impact? | Proposed Sidewalk Width Improvement | | Signal Timing | Pedestrian Flow Rate (s.f./ped.) | Level of Service | Still Impact? |
| ***Eleventh Ave @ 37th St*** | NORTHEAST | 1 | 15 | 5 | 10 | 1232 | A | 1 | 15 | 5 | 10 | 22 | 270 | A | | 1 | 5 | | 270 | A | |
| | SOUTHEAST | 2 | 10 | 6 | 15 | 1335 | A | 2 | 10 | 6 | 15 | 58 | 280 | A | | 2 | 6 | | 280 | A | |
| | SOUTHWEST | 3 | 12 | 7 | | N/A | N/A | 3 | 12 | 7 | | 22 | N/A | N/A | | 3 | 7 | | N/A | N/A | |
| | NORTHWEST | 4 | 12 | 8 | | N/A | N/A | 4 | 12 | 8 | | 0 | N/A | N/A | | 4 | 8 | | N/A | N/A | |
| ***Eleventh Ave @ 38th St*** | NORTHEAST | 1 | 15 | 5 | 10 | 3450 | A | 1 | 15 | 5 | 10 | 22 | 633 | A | | 1 | 5 | | 633 | A | |
| | SOUTHEAST | 2 | 10 | 6 | 15 | 3450 | A | 2 | 10 | 6 | 15 | 22 | 653 | A | | 2 | 6 | | 653 | A | |
| | SOUTHWEST | 3 | 11 | 7 | | N/A | N/A | 3 | 11 | 7 | | 22 | N/A | N/A | | 3 | 7 | | N/A | N/A | |
| | NORTHWEST | 4 | 11 | 8 | | N/A | N/A | 4 | 11 | 8 | | 22 | N/A | N/A | | 4 | 8 | 0 | N/A | N/A | |
| ***Eleventh Ave @ 39th St*** | NORTHEAST | 1 | 14 | 5 | 10 | 2640 | A | 1 | 14 | 5 | 10 | 31 | 1501 | A | | 1 | 5 | | 1501 | A | |
| | SOUTHEAST | 2 | 10 | 6 | 15 | 563 | A | 2 | 10 | 6 | 15 | 49 | 458 | A | | 2 | 6 | | 458 | A | |
| | SOUTHWEST | 3 | 12 | 7 | 13 | 333 | A | 3 | 12 | 7 | | 31 | N/A | N/A | | 3 | 7 | | N/A | N/A | |
| | NORTHWEST | 4 | 11 | 8 | 15 | 474 | A | 4 | 11 | 8 | | 49 | N/A | N/A | | 4 | 8 | | N/A | N/A | |
| ***Eleventh Ave @ 40th St*** | NORTHEAST | 1 | 15 | 5 | 10 | 964 | A | 1 | 15 | 5 | 10 | 22 | 579 | A | | 1 | 5 | | 579 | A | |
| | SOUTHEAST | 2 | 10 | 6 | 15 | 1076 | A | 2 | 10 | 6 | 15 | 22 | 1013 | A | | 2 | 6 | | 1013 | A | |
| | SOUTHWEST | 3 | 13 | 7 | 13 | 1097 | A | 3 | 13 | 7 | | 22 | N/A | N/A | | 3 | 7 | | N/A | N/A | |
| | NORTHWEST | 4 | 13 | 8 | 13 | 865 | A | 4 | 13 | 8 | | 22 | N/A | N/A | | 4 | 8 | | N/A | N/A | |
| ***Eleventh Ave @ 42nd St*** | NORTHEAST | 1 | 16 | 5 | 16 | 293 | A | 1 | 16 | 5 | 16 | 33 | 201 | A | | 1 | 5 | | 201 | A | |
| | SOUTHEAST | 2 | 16 | 6 | 15 | 289 | A | 2 | 16 | 6 | 15 | 35 | 199 | A | | 2 | 6 | | 199 | A | |
| | SOUTHWEST | 3 | 15 | 7 | 16 | 248 | A | 3 | 15 | 7 | 16 | 33 | 165 | A | | 3 | 7 | | 165 | A | |
| | NORTHWEST | 4 | 15 | 8 | 16 | 279 | A | 4 | 15 | 8 | 16 | 35 | 173 | A | | 4 | 8 | | 173 | A | |
| ***Tenth Ave @ 29th St*** | NORTHEAST | 1 | 15 | 5 | 15 | 592 | A | 1 | 15 | 5 | 15 | 30 | 604 | A | | 1 | 5 | | 604 | A | |
| | SOUTHEAST | 2 | 15 | 6 | 15 | 493 | A | 2 | 15 | 6 | 15 | 50 | 508 | A | | 2 | 6 | | 508 | A | |
| | SOUTHWEST | 3 | 13 | 7 | 13 | 356 | A | 3 | 13 | 7 | 13 | 30 | 339 | A | | 3 | 7 | | 339 | A | |
| | NORTHWEST | 4 | 13 | 8 | 13 | 433 | A | 4 | 13 | 8 | 13 | 50 | 412 | A | | 4 | 8 | | 412 | A | |
| ***Tenth Ave @ 30th St*** | NORTHEAST | 1 | 16 | 5 | 15 | 630 | A | 1 | 16 | 5 | 15 | 30 | 533 | A | | 1 | 5 | | 533 | A | |
| | SOUTHEAST | 2 | 15 | 6 | 15 | 756 | A | 2 | 15 | 6 | 15 | 50 | 687 | A | | 2 | 6 | | 687 | A | |
| | SOUTHWEST | 3 | 13 | 7 | 14 | 692 | A | 3 | 13 | 7 | 14 | 30 | 617 | A | | 3 | 7 | | 617 | A | |
| | NORTHWEST | 4 | 15 | 8 | 14 | 652 | A | 4 | 15 | 8 | 14 | 50 | 503 | A | | 4 | 8 | | 503 | A | |
| ***Tenth Ave @ 31st St*** | NORTHEAST | 1 | 15 | 5 | 15 | 747 | A | 1 | 15 | 5 | 15 | 30 | 521 | A | | 1 | 5 | | 521 | A | |
| | SOUTHEAST | 2 | 15 | 6 | 15 | 899 | A | 2 | 15 | 6 | 15 | 50 | 737 | A | | 2 | 6 | | 737 | A | |
| | SOUTHWEST | 3 | 13 | 7 | | N/A | N/A | 3 | 13 | 7 | | 30 | N/A | N/A | | 3 | 7 | | N/A | N/A | |
| | NORTHWEST | 4 | 13 | 8 | | N/A | N/A | 4 | 13 | 8 | | 0 | N/A | N/A | | 4 | 8 | | N/A | N/A | |
| ***Tenth Ave @ 33rd St*** | NORTHEAST | 1 | 15 | 5 | 15 | 441 | A | 1 | 15 | 5 | 15 | 32 | 198 | A | | 1 | 5 | | 198 | A | |
| | SOUTHEAST | 2 | 15 | 6 | 15 | 436 | A | 2 | 15 | 6 | 15 | 48 | 202 | A | | 2 | 6 | | 202 | A | |
| | SOUTHWEST | 3 | 13 | 7 | 13 | 474 | A | 3 | 13 | 7 | 13 | 32 | 194 | A | | 3 | 7 | | 194 | A | |
| | NORTHWEST | 4 | 13 | 8 | 13 | 527 | A | 4 | 13 | 8 | 13 | 48 | 226 | A | | 4 | 8 | | 226 | A | |
| ***Tenth Ave @ 34th St*** | NORTHEAST | 1 | 15 | 5 | 15 | 303 | A | 1 | 15 | 5 | 15 | 30 | 156 | A | | 1 | 5 | 33 | 157 | A | |
| | SOUTHEAST | 2 | 15 | 6 | 15 | 304 | A | 2 | 15 | 6 | 15 | 50 | 153 | A | | 2 | 6 | 47 | 154 | A | |
| | SOUTHWEST | 3 | 20 | 7 | 20 | 374 | A | 3 | 20 | 7 | 20 | 30 | 177 | A | | 3 | 7 | 33 | 177 | A | |
| | NORTHWEST | 4 | 20 | 8 | 20 | 328 | A | 4 | 20 | 8 | 20 | 50 | 160 | A | | 4 | 8 | 47 | 160 | A | |
| ***Tenth Ave @ 35th St*** | NORTHEAST | 1 | 16 | 5 | 15 | 620 | A | 1 | 16 | 5 | 15 | 30 | 229 | A | | 1 | 5 | | 229 | A | |
| | SOUTHEAST | 2 | 15 | 6 | 15 | 692 | A | 2 | 15 | 6 | 15 | 50 | 102 | B | | 2 | 6 | | 102 | B | |
| | SOUTHWEST | 3 | 15 | 7 | 13 | 733 | A | 3 | 15 | 7 | 13 | 30 | 154 | A | | 3 | 7 | | 154 | A | |
| | NORTHWEST | 4 | 9 | 8 | 14 | 555 | A | 4 | 9 | 8 | 14 | 50 | 201 | A | | 4 | 8 | | 201 | A | |

# Appendix S.5.4

## Pedestrian Improvement Analysis - Corner Level of Service

### 2010 Future Conditions (AM)

| Intersection | Corner Location | 2010 Future without the Proposed Action | | | | | | 2010 Future with the Proposed Action | | | | | | | 2010 Future with the Proposed Action (Improvement) | | | | | |
|---|---|---|---|---|---|---|---|---|---|---|---|---|---|---|---|---|---|---|---|---|
| | | Sidewalk Width for No Build Condition | | | | Pedestrian Flow Rate (s.f./ped.) | Level of Service | Sidewalk Width for Build Condition | | | | Pedestrian Green | Pedestrian Flow Rate (s.f./ped.) | Level of Service | Impact? | Proposed Sidewalk Width Improvement | | Signal Timing | Pedestrian Flow Rate (s.f./ped.) | Level of Service | Still Impact? |
| ***Tenth Ave @ 36th St*** | NORTHEAST | 1 | 15 | 5 | 15 | 317 | A | 1 | 15 | 5 | 15 | 30 | 289 | A | | 1 | 5 | | 289 | A | |
| | SOUTHEAST | 2 | 16 | 6 | 15 | 183 | A | 2 | 16 | 6 | 15 | 50 | 172 | A | | 2 | 6 | | 172 | A | |
| | SOUTHWEST | 3 | 12 | 7 | 12 | 239 | A | 3 | 12 | 7 | 12 | 30 | 194 | A | | 3 | 7 | | 194 | A | |
| | NORTHWEST | 4 | 12 | 8 | 12 | 381 | A | 4 | 12 | 8 | 12 | 50 | 274 | A | | 4 | 8 | | 274 | A | |
| ***Tenth Ave @ 37th St*** | NORTHEAST | 1 | 15 | 5 | 15 | 384 | A | 1 | 15 | 5 | 15 | 32 | 288 | A | | 1 | 5 | | 288 | A | |
| | SOUTHEAST | 2 | 15 | 6 | 15 | 446 | A | 2 | 15 | 6 | 15 | 48 | 340 | A | | 2 | 6 | | 340 | A | |
| | SOUTHWEST | 3 | 12 | 7 | 12 | 793 | A | 3 | 12 | 7 | 12 | 32 | 450 | A | | 3 | 7 | | 450 | A | |
| | NORTHWEST | 4 | 12 | 8 | 12 | 532 | A | 4 | 12 | 8 | 12 | 48 | 338 | A | | 4 | 8 | | 338 | A | |
| ***Tenth Ave @ 38th St*** | NORTHEAST | 1 | 15 | 5 | 15 | 1338 | A | 1 | 15 | 5 | 15 | 30 | 791 | A | | 1 | 5 | | 791 | A | |
| | SOUTHEAST | 2 | 15 | 6 | 15 | 2108 | A | 2 | 15 | 6 | 15 | 50 | 1049 | A | | 2 | 6 | | 1049 | A | |
| | SOUTHWEST | 3 | 12 | 7 | 12 | 1643 | A | 3 | 12 | 7 | 12 | 30 | 894 | A | | 3 | 7 | | 894 | A | |
| | NORTHWEST | 4 | 12 | 8 | 12 | 1224 | A | 4 | 12 | 8 | 12 | 50 | 750 | A | | 4 | 8 | | 750 | A | |
| ***Tenth Ave @ 39th St*** | NORTHEAST | 1 | 15 | 5 | 15 | 815 | A | 1 | 15 | 5 | 15 | 35 | 561 | A | | 1 | 5 | | 561 | A | |
| | SOUTHEAST | 2 | 15 | 6 | 15 | 621 | A | 2 | 15 | 6 | 15 | 45 | 461 | A | | 2 | 6 | | 461 | A | |
| | SOUTHWEST | 3 | 12 | 7 | 13 | 1092 | A | 3 | 12 | 7 | 13 | 35 | 798 | A | | 3 | 7 | | 798 | A | |
| | NORTHWEST | 4 | 12 | 8 | 10 | 870 | A | 4 | 12 | 8 | 10 | 45 | 626 | A | | 4 | 8 | | 626 | A | |
| ***Tenth Ave @ 40th St*** | NORTHEAST | 1 | 15 | 5 | 15 | 621 | A | 1 | 15 | 5 | 15 | 36 | 362 | A | | 1 | 5 | | 362 | A | |
| | SOUTHEAST | 2 | 15 | 6 | 15 | 774 | A | 2 | 15 | 6 | 15 | 44 | 513 | A | | 2 | 6 | | 513 | A | |
| | SOUTHWEST | 3 | 12 | 7 | 13 | 2350 | A | 3 | 12 | 7 | 13 | 36 | 1428 | A | | 3 | 7 | | 1428 | A | |
| | NORTHWEST | 4 | 12 | 8 | 13 | 1726 | A | 4 | 12 | 8 | 13 | 44 | 909 | A | | 4 | 8 | | 909 | A | |
| ***Tenth Ave @ 41st St*** | NORTHEAST | 1 | 15 | 5 | 16 | 300 | A | 1 | 15 | 5 | 16 | 45 | 178 | A | | 1 | 5 | | 178 | A | |
| | SOUTHEAST | 2 | 16 | 6 | 10 | 1126 | A | 2 | 16 | 6 | 10 | 35 | 589 | A | | 2 | 6 | | 589 | A | |
| | SOUTHWEST | 3 | 10 | 7 | 17 | 1247 | A | 3 | 10 | 7 | 17 | 45 | 879 | A | | 3 | 7 | | 879 | A | |
| | NORTHWEST | 4 | 14 | 8 | 12 | 421 | A | 4 | 14 | 8 | 12 | 35 | 309 | A | | 4 | 8 | | 309 | A | |
| ***Tenth Ave @ 42nd St*** | NORTHEAST | 1 | 20 | 5 | 16 | 320 | A | 1 | 20 | 5 | 16 | 28 | 247 | A | | 1 | 5 | 34 | 248 | A | |
| | SOUTHEAST | 2 | 22 | 6 | 16 | 298 | A | 2 | 22 | 6 | 16 | 52 | 219 | A | | 2 | 6 | 46 | 220 | A | |
| | SOUTHWEST | 3 | 21 | 7 | 15 | 249 | A | 3 | 21 | 7 | 15 | 28 | 197 | A | | 3 | 7 | 34 | 199 | A | |
| | NORTHWEST | 4 | 20 | 8 | 15 | 187 | A | 4 | 20 | 8 | 15 | 52 | 148 | A | | 4 | 8 | 46 | 151 | A | |
| ***Dyer @ 42nd St*** | NORTHEAST | 1 | | 5 | 6 | N/A | N/A | 1 | | 5 | 6 | 34 | N/A | N/A | | 1 | 5 | | N/A | N/A | |
| | SOUTHEAST | 2 | | 6 | 4 | 66 | B | 2 | | 6 | 4 | 46 | 54 | B | | 2 | 6 | | 54 | B | |
| | SOUTHWEST | 3 | 21 | 7 | 20 | 155 | A | 3 | 21 | 7 | 20 | 34 | 125 | B | | 3 | 7 | | 125 | B | |
| | NORTHWEST | 4 | 20 | 8 | 21 | N/A | N/A | 4 | 20 | 8 | 21 | 46 | N/A | N/A | | 4 | 8 | | N/A | N/A | |
| ***Ninth Ave @ 30th St*** | NORTHEAST | 1 | 16 | 5 | 16 | 169 | A | 1 | 16 | 5 | 16 | 36 | 164 | A | | 1 | 5 | | 164 | A | |
| | SOUTHEAST | 2 | 15 | 6 | 16 | 166 | A | 2 | 15 | 6 | 16 | 44 | 164 | A | | 2 | 6 | | 164 | A | |
| | SOUTHWEST | 3 | 13 | 7 | 14 | 83 | B | 3 | 13 | 7 | 14 | 36 | 84 | B | | 3 | 7 | | 84 | B | |
| | NORTHWEST | 4 | 13 | 8 | 12 | 98 | B | 4 | 13 | 8 | 12 | 44 | 96 | B | | 4 | 8 | | 96 | B | |
| ***Ninth Ave @ 31st St*** | NORTHEAST | 1 | 15 | 5 | 15 | 105 | B | 1 | 15 | 5 | 15 | 30 | 98 | B | | 1 | 5 | | 98 | B | |
| | SOUTHEAST | 2 | 13 | 6 | 15 | 76 | B | 2 | 13 | 6 | 15 | 50 | 74 | B | | 2 | 6 | | 74 | B | |
| | SOUTHWEST | 3 | 13 | 7 | 13 | 131 | A | 3 | 13 | 7 | 13 | 30 | 126 | B | | 3 | 7 | | 126 | B | |
| | NORTHWEST | 4 | 13 | 8 | 13 | 225 | A | 4 | 13 | 8 | 13 | 50 | 204 | A | | 4 | 8 | | 204 | A | |
| ***Ninth Ave @ 33rd St*** | NORTHEAST | 1 | 15 | 5 | 15 | 67 | B | 1 | 15 | 5 | 15 | 30 | 44 | B | | 1 | 5 | | 44 | B | |
| | SOUTHEAST | 2 | 15 | 6 | 15 | 43 | B | 2 | 15 | 6 | 15 | 50 | 30 | C | | 2 | 6 | | 30 | C | |
| | SOUTHWEST | 3 | 13 | 7 | 13 | 55 | B | 3 | 13 | 7 | 13 | 30 | 43 | B | | 3 | 7 | | 43 | B | |
| | NORTHWEST | 4 | 13 | 8 | 13 | 76 | B | 4 | 13 | 8 | 13 | 50 | 54 | B | | 4 | 8 | | 54 | B | |

# Appendix S.5.4

## Pedestrian Improvement Analysis - Corner Level of Service

### 2010 Future Conditions (AM)

| Intersection | Corner Location | 2010 Future without the Proposed Action | | | | | | 2010 Future with the Proposed Action | | | | | | | | 2010 Future with the Proposed Action (Improvement) | | | | | |
|---|---|---|---|---|---|---|---|---|---|---|---|---|---|---|---|---|---|---|---|---|---|
| | | | Sidewalk Width for No Build Condition | | | Pedestrian Flow Rate (s.f./ped.) | Level of Service | | Sidewalk Width for Build Condition | | Pedestrian Green | Pedestrian Flow Rate (s.f./ped.) | Level of Service | Impact? | | Proposed Sidewalk Width Improvement | | Signal Timing | Pedestrian Flow Rate (s.f./ped.) | Level of Service | Still Impact? |
| ***Ninth Ave @ 34th St*** | NORTHEAST | 1 | 15 | 5 | 15 | 67 | B | 1 | 15 | 5 | 15 | 30 | 56 | B | | 1 | 5 | | 56 | B | |
| | SOUTHEAST | 2 | 15 | 6 | 15 | 69 | B | 2 | 15 | 6 | 15 | 35 | 57 | B | | 2 | 6 | | 57 | B | |
| | SOUTHWEST | 3 | 23 | 7 | 20 | 71 | B | 3 | 23 | 7 | 20 | 30 | 60 | B | | 3 | 7 | | 60 | B | |
| | NORTHWEST | 4 | 23 | 8 | 20 | 62 | B | 4 | 23 | 8 | 20 | 35 | 53 | B | | 4 | 8 | | 53 | B | |
| ***Ninth Ave @ 37th St*** | NORTHEAST | 1 | 15 | 5 | 15 | 147 | A | 1 | 15 | 5 | 15 | 30 | 137 | A | | 1 | 5 | | 137 | A | |
| | SOUTHEAST | 2 | 15 | 6 | 15 | 138 | A | 2 | 15 | 6 | 15 | 50 | 130 | A | | 2 | 6 | | 130 | A | |
| | SOUTHWEST | 3 | 12 | 7 | 12 | 98 | B | 3 | 12 | 7 | 12 | 30 | 94 | B | | 3 | 7 | | 94 | B | |
| | NORTHWEST | 4 | 12 | 8 | 12 | 73 | B | 4 | 12 | 8 | 12 | 50 | 70 | B | | 4 | 8 | | 70 | B | |
| ***Ninth Ave @ 38th St*** | NORTHEAST | 1 | 15 | 5 | 15 | 144 | A | 1 | 15 | 5 | 15 | 30 | 127 | B | | 1 | 5 | | 127 | B | |
| | SOUTHEAST | 2 | 15 | 6 | 15 | 142 | A | 2 | 15 | 6 | 15 | 50 | 122 | B | | 2 | 6 | | 122 | B | |
| | SOUTHWEST | 3 | 11 | 7 | 11 | 313 | A | 3 | 11 | 7 | 11 | 30 | 243 | A | | 3 | 7 | | 243 | A | |
| | NORTHWEST | 4 | 11 | 8 | 11 | 285 | A | 4 | 11 | 8 | 11 | 50 | 243 | A | | 4 | 8 | | 243 | A | |
| ***Ninth Ave @ 39th St*** | NORTHEAST | 1 | 15 | 5 | 15 | 131 | A | 1 | 15 | 5 | 15 | 30 | 125 | B | | 1 | 5 | | 125 | B | |
| | SOUTHEAST | 2 | 15 | 6 | 15 | 130 | A | 2 | 15 | 6 | 15 | 50 | 125 | B | | 2 | 6 | | 125 | B | |
| | SOUTHWEST | 3 | 12 | 7 | 12 | 222 | A | 3 | 12 | 7 | 12 | 30 | 224 | A | | 3 | 7 | | 224 | A | |
| | NORTHWEST | 4 | 12 | 8 | 12 | 225 | A | 4 | 12 | 8 | 12 | 50 | 220 | A | | 4 | 8 | | 220 | A | |
| ***Ninth Ave @ 42nd St*** | NORTHEAST | 1 | 16 | 5 | 14 | 20 | D | 1 | 16 | 5 | 14 | 29 | 15 | D | | 1 | 5 | | 15 | D | |
| | SOUTHEAST | 2 | 10 | 6 | 15 | 85 | B | 2 | 10 | 6 | 15 | 35 | 54 | B | | 2 | 6 | | 54 | B | |
| | SOUTHWEST | 3 | 11 | 7 | 20 | 110 | B | 3 | 11 | 7 | 20 | 29 | 56 | B | | 3 | 7 | | 56 | B | |
| | NORTHWEST | 4 | 19 | 8 | 21 | 118 | B | 4 | 19 | 8 | 21 | 35 | 70 | B | | 4 | 8 | | 70 | B | |
| ***Eighth Ave @ 30th St*** | NORTHEAST | 1 | 14 | 5 | 15 | 111 | B | 1 | 14 | 5 | 15 | 38 | 108 | B | | 1 | 5 | | 108 | B | |
| | SOUTHEAST | 2 | 15 | 6 | 14 | 158 | A | 2 | 15 | 6 | 14 | 42 | 154 | A | | 2 | 6 | | 154 | A | |
| | SOUTHWEST | 3 | 13 | 7 | 14 | 187 | A | 3 | 13 | 7 | 14 | 38 | 184 | A | | 3 | 7 | | 184 | A | |
| | NORTHWEST | 4 | 14 | 8 | 13 | 144 | A | 4 | 14 | 8 | 13 | 42 | 141 | A | | 4 | 8 | | 141 | A | |
| ***Eighth Ave @ 31st St*** | NORTHEAST | 1 | 16 | 5 | 15 | 417 | A | 1 | 16 | 5 | 15 | 40 | 411 | A | | 1 | 5 | | 411 | A | |
| | SOUTHEAST | 2 | 24 | 6 | 15 | 75 | B | 2 | 24 | 6 | 15 | 40 | 74 | B | | 2 | 6 | | 74 | B | |
| | SOUTHWEST | 3 | 49 | 7 | 13 | 96 | B | 3 | 49 | 7 | 13 | 40 | 94 | B | | 3 | 7 | | 94 | B | |
| | NORTHWEST | 4 | 14 | 8 | 24 | 138 | A | 4 | 14 | 8 | 24 | 40 | 136 | A | | 4 | 8 | | 136 | A | |
| ***Eighth Ave @ 33rd St*** | NORTHEAST | 1 | 15 | 5 | 43 | 57 | B | 1 | 15 | 5 | 43 | 47 | 54 | B | | 1 | 5 | | 54 | B | |
| | SOUTHEAST | 2 | 19 | 6 | 16 | 340 | A | 2 | 19 | 6 | 16 | 33 | 327 | A | | 2 | 6 | | 327 | A | |
| | SOUTHWEST | 3 | 17 | 7 | 24 | 30 | C | 3 | 17 | 7 | 24 | 47 | 29 | C | | 3 | 7 | | 29 | C | |
| | NORTHWEST | 4 | 43 | 8 | 14 | 15 | D | 4 | 43 | 8 | 14 | 33 | 14 | E | Yes | 4 | 8 | | 14 | E | Yes |
| ***Eighth Ave @ 34th St*** | NORTHEAST | 1 | 15 | 5 | 15 | 80 | B | 1 | 15 | 5 | 15 | 40 | 67 | B | | 1 | 5 | 32 | 64 | B | |
| | SOUTHEAST | 2 | 15 | 6 | 15 | 85 | B | 2 | 15 | 6 | 15 | 40 | 73 | B | | 2 | 6 | 34 | 70 | B | |
| | SOUTHWEST | 3 | 22 | 7 | 22 | 80 | B | 3 | 22 | 7 | 22 | 40 | 67 | B | | 3 | 7 | 32 | 65 | B | |
| | NORTHWEST | 4 | 22 | 8 | 22 | 77 | B | 4 | 22 | 8 | 22 | 40 | 64 | B | | 4 | 8 | 34 | 61 | B | |
| ***Eighth Ave @ 37th St*** | NORTHEAST | 1 | 15 | 5 | 15 | 49 | B | 1 | 15 | 5 | 15 | 36 | 49 | B | | 1 | 5 | | 49 | B | |
| | SOUTHEAST | 2 | 15 | 6 | 15 | 53 | B | 2 | 15 | 6 | 15 | 44 | 52 | B | | 2 | 6 | | 52 | B | |
| | SOUTHWEST | 3 | 12 | 7 | 12 | 43 | B | 3 | 12 | 7 | 12 | 36 | 42 | B | | 3 | 7 | | 42 | B | |
| | NORTHWEST | 4 | 12 | 8 | 13 | 50 | B | 4 | 12 | 8 | 13 | 44 | 49 | B | | 4 | 8 | | 49 | B | |
| ***Eighth Ave @ 38th St*** | NORTHEAST | 1 | 15 | 5 | 15 | 96 | B | 1 | 15 | 5 | 15 | 38 | 91 | B | | 1 | 5 | | 91 | B | |
| | SOUTHEAST | 2 | 15 | 6 | 15 | 112 | B | 2 | 15 | 6 | 15 | 42 | 105 | B | | 2 | 6 | | 105 | B | |
| | SOUTHWEST | 3 | 12 | 7 | 11 | 80 | B | 3 | 12 | 7 | 11 | 38 | 75 | B | | 3 | 7 | | 75 | B | |
| | NORTHWEST | 4 | 12 | 8 | 11 | 59 | B | 4 | 12 | 8 | 11 | 42 | 56 | B | | 4 | 8 | | 56 | B | |

# Appendix S.5.4

## Pedestrian Improvement Analysis - Corner Level of Service

### 2010 Future Conditions (AM)

| Intersection | Corner Location | 2010 Future without the Proposed Action | | | | | | 2010 Future with the Proposed Action | | | | | | | 2010 Future with the Proposed Action (Improvement) | | | | | |
|---|---|---|---|---|---|---|---|---|---|---|---|---|---|---|---|---|---|---|---|---|
| | | Sidewalk Width for No Build Condition | | | | Pedestrian Flow Rate (s.f./ped.) | Level of Service | Sidewalk Width for Build Condition | | | | Pedestrian Green | Pedestrian Flow Rate (s.f./ped.) | Level of Service | Impact? | Proposed Sidewalk Width Improvement | | Signal Timing | Pedestrian Flow Rate (s.f./ped.) | Level of Service | Still Impact? |
| ***Eighth Ave @ 39th St*** | NORTHEAST | 1 | 15 | 5 | 15 | 20 | D | 1 | 15 | 5 | 15 | 40 | 20 | D | | 1 | 5 | | 20 | D | |
| | SOUTHEAST | 2 | 15 | 6 | 15 | 29 | C | 2 | 15 | 6 | 15 | 40 | 28 | C | | 2 | 6 | | 28 | C | |
| | SOUTHWEST | 3 | 12 | 7 | 12 | 32 | C | 3 | 12 | 7 | 12 | 40 | 31 | C | | 3 | 7 | | 31 | C | |
| | NORTHWEST | 4 | 12 | 8 | 12 | 26 | C | 4 | 12 | 8 | 12 | 40 | 25 | C | | 4 | 8 | | 25 | C | |
| ***Eighth Ave @ 42nd St*** | NORTHEAST | 1 | 15 | 5 | 12 | 50 | B | 1 | 15 | 5 | 12 | 25 | 46 | B | | 1 | 5 | | 46 | B | |
| | SOUTHEAST | 2 | 16 | 6 | 29 | 9 | E | 2 | 16 | 6 | 29 | 35 | 7 | E | Yes | 2 | 6 | | 7 | E | Yes |
| | SOUTHWEST | 3 | 23 | 7 | 34 | 64 | B | 3 | 23 | 7 | 34 | 25 | 59 | B | | 3 | 7 | | 59 | B | |
| | NORTHWEST | 4 | 16 | 8 | 20 | 26 | C | 4 | 16 | 8 | 20 | 35 | 23 | D | | 4 | 8 | | 23 | D | |
| ***Seventh Ave @ 31st St*** | NORTHEAST | 1 | 23 | 5 | 20 | 42 | B | 1 | 23 | 5 | 20 | 38 | 42 | B | | 1 | 5 | | 42 | B | |
| | SOUTHEAST | 2 | 23 | 6 | 20 | 56 | B | 2 | 23 | 6 | 20 | 42 | 56 | B | | 2 | 6 | | 56 | B | |
| | SOUTHWEST | 3 | 13 | 7 | 13 | 50 | B | 3 | 13 | 7 | 13 | 38 | 50 | B | | 3 | 7 | | 50 | B | |
| | NORTHWEST | 4 | 13 | 8 | 18 | 62 | B | 4 | 13 | 8 | 18 | 42 | 62 | B | | 4 | 8 | | 62 | B | |
| ***Seventh Ave @ 33rd St*** | NORTHEAST | 1 | 20 | 5 | 20 | 27 | C | 1 | 20 | 5 | 20 | 22 | 27 | C | | 1 | 5 | | 27 | C | |
| | SOUTHEAST | 2 | 20 | 6 | 40 | 20 | D | 2 | 20 | 6 | 40 | 58 | 20 | D | | 2 | 6 | | 20 | D | |
| | SOUTHWEST | 3 | 13 | 7 | 40 | 204 | A | 3 | 13 | 7 | 40 | 22 | 200 | A | | 3 | 7 | | 200 | A | |
| | NORTHWEST | 4 | 13 | 8 | 15 | 32 | C | 4 | 13 | 8 | 15 | 58 | 31 | C | | 4 | 8 | | 31 | C | |
| ***Seventh Ave @ 34th St*** | NORTHEAST | 1 | 20 | 5 | 20 | 74 | B | 1 | 20 | 5 | 20 | 35 | 72 | B | | 1 | 5 | | 72 | B | |
| | SOUTHEAST | 2 | 20 | 6 | 20 | 66 | B | 2 | 20 | 6 | 20 | 44 | 65 | B | | 2 | 6 | | 65 | B | |
| | SOUTHWEST | 3 | 23 | 7 | 23 | 35 | C | 3 | 23 | 7 | 23 | 35 | 35 | C | | 3 | 7 | | 35 | C | |
| | NORTHWEST | 4 | 23 | 8 | 23 | 39 | C | 4 | 23 | 8 | 23 | 44 | 39 | C | | 4 | 8 | | 39 | C | |
| ***Sixth Ave @ 33rd St*** | NORTHEAST | 1 | 34 | 5 | 27 | 81 | B | 1 | 34 | 5 | 27 | 27 | 80 | B | | 1 | 5 | | 80 | B | |
| | SOUTHEAST | 2 | 28 | 6 | 24 | 70 | B | 2 | 28 | 6 | 24 | 90 | 70 | B | | 2 | 6 | | 70 | B | |
| | SOUTHWEST | 3 | 13 | 7 | 13 | 40 | B | 3 | 13 | 7 | 13 | 27 | 39 | C | | 3 | 7 | | 39 | C | |
| | NORTHWEST | 4 | 13 | 8 | 13 | 80 | B | 4 | 13 | 8 | 13 | 39 | 80 | B | | 4 | 8 | | 80 | B | |
| ***Sixth Ave @ 34th St*** | NORTHEAST | 1 | | 5 | 17 | 45 | B | 1 | | 5 | 17 | 27 | 44 | B | | 1 | 5 | | 44 | B | |
| | SOUTHEAST | 2 | 17 | 6 | | 49 | B | 2 | 17 | 6 | | 53 | 48 | B | | 2 | 6 | | 48 | B | |
| | SOUTHWEST | 3 | 23 | 7 | | N/A | N/A | 3 | 23 | 7 | | 27 | N/A | N/A | | 3 | 7 | | N/A | N/A | |
| | NORTHWEST | 4 | 23 | 8 | | N/A | N/A | 4 | 23 | 8 | | 53 | N/A | N/A | | 4 | 8 | | N/A | N/A | |
| ***Broadway @ 34th St*** | NORTHEAST | 1 | 30 | 5 | | N/A | N/A | 1 | 30 | 5 | | 27 | N/A | N/A | | 1 | 5 | | N/A | N/A | |
| | SOUTHEAST | 2 | | 6 | 30 | N/A | N/A | 2 | | 6 | 30 | 53 | N/A | N/A | | 2 | 6 | | N/A | N/A | |
| | SOUTHWEST | 3 | | 7 | 23 | 77 | B | 3 | | 7 | 23 | 27 | 76 | B | | 3 | 7 | | 76 | B | |
| | NORTHWEST | 4 | | 8 | 23 | 53 | B | 4 | | 8 | 23 | 53 | 52 | B | | 4 | 8 | | 52 | B | |
| ***Blvd @ 33rd St*** | NORTHEAST | | | | | N/A | N/A | 1 | 10 | 5 | | 30 | 219 | A | | 1 | 5 | | 219 | A | |
| | SOUTHEAST | | | | | N/A | N/A | 2 | 13 | 6 | | 50 | N/A | N/A | | 2 | 6 | | N/A | N/A | |
| | SOUTHWEST | | | | | N/A | N/A | 3 | 13 | 7 | 13 | 30 | N/A | N/A | | 3 | 7 | | N/A | N/A | |
| | NORTHWEST | | | | | N/A | N/A | 4 | 13 | 8 | 13 | 50 | 131 | A | | 4 | 8 | | 131 | A | |
| ***Blvd @ 34th St*** | NORTHEAST | | | | | N/A | N/A | 1 | 18 | 5 | 13 | 30 | 116 | B | | 1 | 5 | | 116 | B | |
| | SOUTHEAST | | | | | N/A | N/A | 2 | 13 | 6 | 13 | 50 | 73 | B | | 2 | 6 | | 73 | B | |
| | SOUTHWEST | | | | | N/A | N/A | 3 | 20 | 7 | 20 | 30 | 49 | B | | 3 | 7 | | 49 | B | |
| | NORTHWEST | | | | | N/A | N/A | 4 | 20 | 8 | 30 | 50 | 154 | A | | 4 | 8 | | 154 | A | |

# Appendix S.5.4

**Pedestrian Improvement Analysis - Corner Level of Service**

**2010 Future Conditions (MD)**

| Intersection | Corner Location | 2010 Future without the Proposed Action | | | | | | 2010 Future with the Proposed Action | | | | | | | 2010 Future with the Proposed Action (Improvement) | | | | | |
|---|---|---|---|---|---|---|---|---|---|---|---|---|---|---|---|---|---|---|---|---|
| | | Sidewalk Width for No Build Condition | | | | Pedestrian Flow Rate (s.f./ped.) | Level of Service | Sidewalk Width for Build Condition | | | | Pedestrian Green | Pedestrian Flow Rate (s.f./ped.) | Level of Service | Impact? | Proposed Sidewalk Width Improvement | | Signal Timing | Pedestrian Flow Rate (s.f./ped.) | Level of Service | Still Impact? |
| ***Twelfth Ave @ 30th St*** | NORTHEAST | 1 | | 5 | 15 | 7991 | A | 1 | | 5 | 15 | 24 | 7991 | A | | 1 | 5 | | 7991 | A | |
| | SOUTHEAST | 2 | 11 | 6 | | 7128 | A | 2 | 11 | 6 | | 70 | 7128 | A | | 2 | 6 | 69 | 7128 | A | |
| | SOUTHWEST | 3 | 13 | 7 | | N/A | N/A | 3 | 13 | 7 | | 24 | N/A | N/A | | 3 | 7 | | N/A | N/A | |
| | NORTHWEST | 4 | 13 | 8 | | N/A | N/A | 4 | 13 | 8 | | 70 | N/A | N/A | | 4 | 8 | 69 | N/A | N/A | |
| ***Twelfth Ave @ 34th St*** | NORTHEAST | 1 | | 5 | 12 | 2311 | A | 1 | | 5 | 12 | 29 | 1889 | A | | 1 | 5 | | 2080 | A | |
| | SOUTHEAST | 2 | 12 | 6 | | 338 | A | 2 | 12 | 6 | | 60 | 321 | A | | 2 | 6 | | 327 | A | |
| | SOUTHWEST | 3 | 18 | 7 | | N/A | N/A | 3 | 18 | 7 | | 29 | N/A | N/A | | 3 | 7 | | N/A | N/A | |
| | NORTHWEST | 4 | 18 | 8 | | N/A | N/A | 4 | 18 | 8 | | 60 | N/A | N/A | | 4 | 8 | | N/A | N/A | |
| ***Twelfth Ave @ 39th St*** | NORTHEAST | 1 | | 5 | 18 | 3442 | A | 1 | | 5 | 18 | 30 | N/A | N/A | | 1 | 5 | | N/A | N/A | |
| | SOUTHEAST | 2 | 13 | 6 | | 605 | A | 2 | 13 | 6 | | 49 | N/A | N/A | | 2 | 6 | 67 | N/A | N/A | |
| | SOUTHWEST | 3 | 13 | 7 | | N/A | N/A | 3 | | 7 | | 30 | N/A | N/A | | 3 | 7 | | N/A | N/A | |
| | NORTHWEST | 4 | 13 | 8 | | N/A | N/A | 4 | | 8 | | 49 | N/A | N/A | | 4 | 8 | 67 | N/A | N/A | |
| ***Twelfth Ave @ 40th St*** | NORTHEAST | 1 | | 5 | 14 | 4195 | A | 1 | | 5 | 14 | 0 | N/A | N/A | | 1 | 5 | | N/A | N/A | |
| | SOUTHEAST | 2 | 13 | 6 | | 4702 | A | 2 | 13 | 6 | | 63 | N/A | N/A | | 2 | 6 | | N/A | N/A | |
| | SOUTHWEST | 3 | 11 | 7 | | N/A | N/A | 3 | | 7 | | 0 | N/A | N/A | | 3 | 7 | | N/A | N/A | |
| | NORTHWEST | 4 | 12 | 8 | | N/A | N/A | 4 | | 8 | | 63 | N/A | N/A | | 4 | 8 | | N/A | N/A | |
| ***Twelfth Ave @ 42nd St*** | NORTHEAST | 1 | | 5 | 20 | 396 | A | 1 | | 5 | 20 | 33 | 374 | A | | 1 | 5 | | 374 | A | |
| | SOUTHEAST | 2 | 20 | 6 | | 943 | A | 2 | 20 | 6 | | 45 | 919 | A | | 2 | 6 | | 919 | A | |
| | SOUTHWEST | 3 | 15 | 7 | | N/A | N/A | 3 | 15 | 7 | | 33 | N/A | N/A | | 3 | 7 | | N/A | N/A | |
| | NORTHWEST | 4 | 26 | 8 | | N/A | N/A | 4 | 26 | 8 | | 45 | N/A | N/A | | 4 | 8 | | N/A | N/A | |
| ***Eleventh Ave @ 29th St*** | NORTHEAST | 1 | 15 | 5 | 15 | 367 | A | 1 | 15 | 5 | 15 | 40 | 192 | A | | 1 | 5 | | 192 | A | |
| | SOUTHEAST | 2 | 15 | 6 | 15 | 358 | A | 2 | 15 | 6 | 15 | 40 | 248 | A | | 2 | 6 | | 248 | A | |
| | SOUTHWEST | 3 | 13 | 7 | 13 | 860 | A | 3 | 13 | 7 | 13 | 40 | 531 | A | | 3 | 7 | | 531 | A | |
| | NORTHWEST | 4 | 13 | 8 | 13 | 858 | A | 4 | 13 | 8 | 13 | 40 | 427 | A | | 4 | 8 | | 427 | A | |
| ***Eleventh Ave @ 30th St*** | NORTHEAST | 1 | 15 | 5 | 15 | 183 | A | 1 | 15 | 5 | 15 | 40 | 114 | B | | 1 | 5 | | 114 | B | |
| | SOUTHEAST | 2 | 15 | 6 | 15 | 349 | A | 2 | 15 | 6 | 15 | 40 | 181 | A | | 2 | 6 | | 181 | A | |
| | SOUTHWEST | 3 | 13 | 7 | 13 | 413 | A | 3 | 13 | 7 | 13 | 40 | 208 | A | | 3 | 7 | | 208 | A | |
| | NORTHWEST | 4 | 13 | 8 | 13 | 210 | A | 4 | 13 | 8 | 13 | 40 | 136 | A | | 4 | 8 | | 136 | A | |
| ***Eleventh Ave @ 33rd St*** | NORTHEAST | 1 | 15 | 5 | 15 | 183 | A | 1 | 15 | 5 | 15 | 25 | 103 | B | | 1 | 5 | | 103 | B | |
| | SOUTHEAST | 2 | 15 | 6 | 15 | 968 | A | 2 | 15 | 6 | 15 | 55 | 206 | A | | 2 | 6 | | 206 | A | |
| | SOUTHWEST | 3 | 13 | 7 | 13 | 5496 | A | 3 | 13 | 7 | | 25 | N/A | N/A | | 3 | 7 | | N/A | N/A | |
| | NORTHWEST | 4 | 13 | 8 | 13 | 4118 | A | 4 | 13 | 8 | | 55 | N/A | N/A | | 4 | 8 | | N/A | N/A | |
| ***Eleventh Ave @ 34th St*** | NORTHEAST | 1 | 15 | 5 | 15 | 185 | A | 1 | 15 | 5 | 15 | 27 | 168 | A | | 1 | 5 | 43 | 167 | A | |
| | SOUTHEAST | 2 | 12 | 6 | 15 | 226 | A | 2 | 17 | 6 | 15 | 53 | 101 | B | | 2 | 6 | 37 | 100 | B | |
| | SOUTHWEST | 3 | 20 | 7 | 20 | 433 | A | 3 | 30 | 7 | 20 | 27 | 159 | A | | 3 | 7 | 43 | 158 | A | |
| | NORTHWEST | 4 | 20 | 8 | 20 | 411 | A | 4 | 20 | 8 | 20 | 53 | 168 | A | | 4 | 8 | 37 | 169 | A | |
| ***Eleventh Ave @ 35th St*** | NORTHEAST | 1 | 19 | 5 | 11 | 326 | A | 1 | 19 | 5 | 16 | 40 | 142 | A | | 1 | 5 | | 142 | A | |
| | SOUTHEAST | 2 | 15 | 6 | 15 | 229 | A | 2 | 15 | 6 | 15 | 40 | 180 | A | | 2 | 6 | | 180 | A | |
| | SOUTHWEST | 3 | 14 | 7 | | N/A | N/A | 3 | 14 | 7 | | 40 | N/A | N/A | | 3 | 7 | | N/A | N/A | |
| | NORTHWEST | 4 | 14 | 8 | | N/A | N/A | 4 | 19 | 8 | | 40 | N/A | N/A | | 4 | 8 | | N/A | N/A | |
| ***Eleventh Ave @ 36th St*** | NORTHEAST | 1 | 15 | 5 | 15 | 179 | A | 1 | 15 | 5 | 15 | 22 | 90 | B | | 1 | 5 | | 89 | B | |
| | SOUTHEAST | 2 | 9 | 6 | 17 | 209 | A | 2 | 9 | 6 | 17 | 22 | 78 | B | | 2 | 6 | | 78 | B | |
| | SOUTHWEST | 3 | 13 | 7 | | N/A | N/A | 3 | 13 | 7 | | 22 | N/A | N/A | | 3 | 7 | | N/A | N/A | |
| | NORTHWEST | 4 | 10 | 8 | | N/A | N/A | 4 | 10 | 8 | | 22 | N/A | N/A | | 4 | 8 | | N/A | N/A | |

# Appendix S.5.4

**Pedestrian Improvement Analysis - Corner Level of Service**

**2010 Future Conditions (MD)**

| Intersection | Corner Location | 2010 Future without the Proposed Action | | | | | | 2010 Future with the Proposed Action | | | | | | | | 2010 Future with the Proposed Action (Improvement) | | | | | |
|---|---|---|---|---|---|---|---|---|---|---|---|---|---|---|---|---|---|---|---|---|---|
| | | Sidewalk Width for No Build Condition | | | | Pedestrian Flow Rate (s.f./ped.) | Level of Service | Sidewalk Width for Build Condition | | | | Pedestrian Green | Pedestrian Flow Rate (s.f./ped.) | Level of Service | Impact? | Proposed Sidewalk Width Improvement | | Signal Timing | Pedestrian Flow Rate (s.f./ped.) | Level of Service | Still Impact? |
| ***Eleventh Ave @ 37th St*** | NORTHEAST | 1 | 15 | 5 | 10 | 165 | A | 1 | 15 | 5 | 10 | 22 | 92 | B | | 1 | 5 | | 92 | B | |
| | SOUTHEAST | 2 | 10 | 6 | 15 | 142 | A | 2 | 10 | 6 | 15 | 58 | 83 | B | | 2 | 6 | | 83 | B | |
| | SOUTHWEST | 3 | 12 | 7 | | N/A | N/A | 3 | 12 | 7 | | 22 | N/A | N/A | | 3 | 7 | | N/A | N/A | |
| | NORTHWEST | 4 | 12 | 8 | | N/A | N/A | 4 | 12 | 8 | | 58 | N/A | N/A | | 4 | 8 | | N/A | N/A | |
| ***Eleventh Ave @ 38th St*** | NORTHEAST | 1 | 15 | 5 | 10 | 571 | A | 1 | 15 | 5 | 10 | 22 | 165 | A | | 1 | 5 | | 165 | A | |
| | SOUTHEAST | 2 | 10 | 6 | 15 | 1134 | A | 2 | 10 | 6 | 15 | 22 | 208 | A | | 2 | 6 | | 208 | A | |
| | SOUTHWEST | 3 | 11 | 7 | | N/A | N/A | 3 | 11 | 7 | | 22 | N/A | N/A | | 3 | 7 | | N/A | N/A | |
| | NORTHWEST | 4 | 11 | 8 | | N/A | N/A | 4 | 11 | 8 | | 22 | N/A | N/A | | 4 | 8 | | N/A | N/A | |
| ***Eleventh Ave @ 39th St*** | NORTHEAST | 1 | 14 | 5 | 10 | 875 | A | 1 | 14 | 5 | 10 | 31 | 383 | A | | 1 | 5 | 43 | 384 | A | |
| | SOUTHEAST | 2 | 10 | 6 | 15 | 253 | A | 2 | 10 | 6 | 15 | 49 | 170 | A | | 2 | 6 | 37 | 172 | A | |
| | SOUTHWEST | 3 | 12 | 7 | 13 | 492 | A | 3 | 12 | 7 | | 31 | N/A | N/A | | 3 | 7 | 43 | N/A | N/A | |
| | NORTHWEST | 4 | 11 | 8 | 15 | 1425 | A | 4 | 11 | 8 | | 49 | N/A | N/A | | 4 | 8 | 37 | N/A | N/A | |
| ***Eleventh Ave @ 40th St*** | NORTHEAST | 1 | 15 | 5 | 10 | 1666 | A | 1 | 15 | 5 | 10 | 22 | 286 | A | | 1 | 5 | | 286 | A | |
| | SOUTHEAST | 2 | 10 | 6 | 15 | 1400 | A | 2 | 10 | 6 | 15 | 22 | 720 | A | | 2 | 6 | | 720 | A | |
| | SOUTHWEST | 3 | 13 | 7 | 13 | 1733 | A | 3 | 13 | 7 | | 22 | N/A | N/A | | 3 | 7 | | N/A | N/A | |
| | NORTHWEST | 4 | 13 | 8 | 13 | 1644 | A | 4 | 13 | 8 | | 22 | N/A | N/A | | 4 | 8 | | N/A | N/A | |
| ***Eleventh Ave @ 42nd St*** | NORTHEAST | 1 | 16 | 5 | 16 | 206 | A | 1 | 16 | 5 | 16 | 33 | 123 | B | | 1 | 5 | 34 | 123 | B | |
| | SOUTHEAST | 2 | 16 | 6 | 15 | 235 | A | 2 | 16 | 6 | 15 | 35 | 113 | B | | 2 | 6 | 34 | 113 | B | |
| | SOUTHWEST | 3 | 15 | 7 | 16 | 245 | A | 3 | 15 | 7 | 16 | 33 | 117 | B | | 3 | 7 | 34 | 117 | B | |
| | NORTHWEST | 4 | 15 | 8 | 16 | 234 | A | 4 | 15 | 8 | 16 | 35 | 119 | B | | 4 | 8 | 34 | 119 | B | |
| ***Tenth Ave @ 29th St*** | NORTHEAST | 1 | 15 | 5 | 15 | 201 | A | 1 | 15 | 5 | 15 | 30 | 178 | A | | 1 | 5 | | 178 | A | |
| | SOUTHEAST | 2 | 15 | 6 | 15 | 173 | A | 2 | 15 | 6 | 15 | 50 | 156 | A | | 2 | 6 | | 156 | A | |
| | SOUTHWEST | 3 | 13 | 7 | 13 | 161 | A | 3 | 13 | 7 | 13 | 30 | 137 | A | | 3 | 7 | | 137 | A | |
| | NORTHWEST | 4 | 13 | 8 | 13 | 178 | A | 4 | 13 | 8 | 13 | 50 | 147 | A | | 4 | 8 | | 147 | A | |
| ***Tenth Ave @ 30th St*** | NORTHEAST | 1 | 16 | 5 | 15 | 124 | B | 1 | 16 | 5 | 15 | 30 | 101 | B | | 1 | 5 | | 101 | B | |
| | SOUTHEAST | 2 | 15 | 6 | 15 | 294 | A | 2 | 15 | 6 | 15 | 50 | 214 | A | | 2 | 6 | | 214 | A | |
| | SOUTHWEST | 3 | 13 | 7 | 14 | 254 | A | 3 | 13 | 7 | 14 | 30 | 164 | A | | 3 | 7 | | 164 | A | |
| | NORTHWEST | 4 | 15 | 8 | 14 | 136 | A | 4 | 15 | 8 | 14 | 50 | 100 | B | | 4 | 8 | | 100 | B | |
| ***Tenth Ave @ 31st St*** | NORTHEAST | 1 | 15 | 5 | 15 | 182 | A | 1 | 15 | 5 | 15 | 30 | 140 | A | | 1 | 5 | | 140 | A | |
| | SOUTHEAST | 2 | 15 | 6 | 15 | 292 | A | 2 | 15 | 6 | 15 | 50 | 210 | A | | 2 | 6 | | 210 | A | |
| | SOUTHWEST | 3 | 13 | 7 | | N/A | N/A | 3 | 13 | 7 | | 30 | N/A | N/A | | 3 | 7 | | N/A | N/A | |
| | NORTHWEST | 4 | 13 | 8 | | N/A | N/A | 4 | 13 | 8 | | 50 | N/A | N/A | | 4 | 8 | | N/A | N/A | |
| ***Tenth Ave @ 33rd St*** | NORTHEAST | 1 | 15 | 5 | 15 | 80 | B | 1 | 15 | 5 | 15 | 32 | 65 | B | | 1 | 5 | | 65 | B | |
| | SOUTHEAST | 2 | 15 | 6 | 15 | 91 | B | 2 | 15 | 6 | 15 | 48 | 73 | B | | 2 | 6 | | 73 | B | |
| | SOUTHWEST | 3 | 13 | 7 | 13 | 79 | B | 3 | 13 | 7 | 13 | 32 | 53 | B | | 3 | 7 | | 53 | B | |
| | NORTHWEST | 4 | 13 | 8 | 13 | 78 | B | 4 | 13 | 8 | 13 | 48 | 54 | B | | 4 | 8 | | 54 | B | |
| ***Tenth Ave @ 34th St*** | NORTHEAST | 1 | 15 | 5 | 15 | 180 | A | 1 | 15 | 5 | 15 | 30 | 92 | B | | 1 | 5 | 33 | 92 | B | |
| | SOUTHEAST | 2 | 15 | 6 | 15 | 149 | A | 2 | 15 | 6 | 15 | 50 | 79 | B | | 2 | 6 | 47 | 80 | B | |
| | SOUTHWEST | 3 | 20 | 7 | 20 | 172 | A | 3 | 20 | 7 | 20 | 30 | 74 | B | | 3 | 7 | 33 | 74 | B | |
| | NORTHWEST | 4 | 20 | 8 | 20 | 165 | A | 4 | 20 | 8 | 20 | 50 | 73 | B | | 4 | 8 | 47 | 73 | B | |
| ***Tenth Ave @ 35th St*** | NORTHEAST | 1 | 16 | 5 | 15 | 281 | A | 1 | 16 | 5 | 15 | 30 | 167 | A | | 1 | 5 | | 167 | A | |
| | SOUTHEAST | 2 | 15 | 6 | 15 | 214 | A | 2 | 15 | 6 | 15 | 50 | 43 | B | | 2 | 6 | | 43 | B | |
| | SOUTHWEST | 3 | 15 | 7 | 13 | 248 | A | 3 | 15 | 7 | 13 | 30 | 46 | B | | 3 | 7 | | 46 | B | |
| | NORTHWEST | 4 | 9 | 8 | 14 | 218 | A | 4 | 9 | 8 | 14 | 50 | 80 | B | | 4 | 8 | | 80 | B | |

# Appendix S.5.4

## Pedestrian Improvement Analysis - Corner Level of Service

### 2010 Future Conditions (MD)

| Intersection | Corner Location | 2010 Future without the Proposed Action | | | | | | 2010 Future with the Proposed Action | | | | | | | | 2010 Future with the Proposed Action (Improvement) | | | | | |
|---|---|---|---|---|---|---|---|---|---|---|---|---|---|---|---|---|---|---|---|---|---|
| | | Sidewalk Width for No Build Condition | | | | Pedestrian Flow Rate (s.f./ped.) | Level of Service | Sidewalk Width for Build Condition | | | | Pedestrian Green | Pedestrian Flow Rate (s.f./ped.) | Level of Service | Impact? | Proposed Sidewalk Width Improvement | | Signal Timing | Pedestrian Flow Rate (s.f./ped.) | Level of Service | Still Impact? |
| ***Tenth Ave @ 36th St*** | NORTHEAST | 1 | 15 | 5 | 15 | 363 | A | 1 | 15 | 5 | 15 | 30 | 202 | A | | 1 | 5 | | 202 | A | |
| | SOUTHEAST | 2 | 16 | 6 | 15 | 429 | A | 2 | 16 | 6 | 15 | 50 | 207 | A | | 2 | 6 | | 207 | A | |
| | SOUTHWEST | 3 | 12 | 7 | 12 | 336 | A | 3 | 12 | 7 | 12 | 30 | 89 | B | | 3 | 7 | | 89 | B | |
| | NORTHWEST | 4 | 12 | 8 | 12 | 247 | A | 4 | 12 | 8 | 12 | 50 | 79 | B | | 4 | 8 | | 79 | B | |
| ***Tenth Ave @ 37th St*** | NORTHEAST | 1 | 15 | 5 | 15 | 266 | A | 1 | 15 | 5 | 15 | 32 | 139 | A | | 1 | 5 | | 139 | A | |
| | SOUTHEAST | 2 | 15 | 6 | 15 | 312 | A | 2 | 15 | 6 | 15 | 48 | 164 | A | | 2 | 6 | | 164 | A | |
| | SOUTHWEST | 3 | 12 | 7 | 12 | 341 | A | 3 | 12 | 7 | 12 | 32 | 95 | B | | 3 | 7 | | 95 | B | |
| | NORTHWEST | 4 | 12 | 8 | 12 | 274 | A | 4 | 12 | 8 | 12 | 48 | 86 | B | | 4 | 8 | | 86 | B | |
| ***Tenth Ave @ 38th St*** | NORTHEAST | 1 | 15 | 5 | 15 | 321 | A | 1 | 15 | 5 | 15 | 30 | 154 | A | | 1 | 5 | | 154 | A | |
| | SOUTHEAST | 2 | 15 | 6 | 15 | 382 | A | 2 | 15 | 6 | 15 | 50 | 178 | A | | 2 | 6 | | 178 | A | |
| | SOUTHWEST | 3 | 12 | 7 | 12 | 435 | A | 3 | 12 | 7 | 12 | 30 | 138 | A | | 3 | 7 | | 138 | A | |
| | NORTHWEST | 4 | 12 | 8 | 12 | 373 | A | 4 | 12 | 8 | 12 | 50 | 129 | B | | 4 | 8 | | 129 | B | |
| ***Tenth Ave @ 39th St*** | NORTHEAST | 1 | 15 | 5 | 15 | 268 | A | 1 | 15 | 5 | 15 | 35 | 136 | A | | 1 | 5 | | 136 | A | |
| | SOUTHEAST | 2 | 15 | 6 | 15 | 288 | A | 2 | 15 | 6 | 15 | 45 | 143 | A | | 2 | 6 | | 143 | A | |
| | SOUTHWEST | 3 | 12 | 7 | 13 | 355 | A | 3 | 12 | 7 | 13 | 35 | 194 | A | | 3 | 7 | | 194 | A | |
| | NORTHWEST | 4 | 12 | 8 | 10 | 227 | A | 4 | 12 | 8 | 10 | 45 | 128 | B | | 4 | 8 | | 128 | B | |
| ***Tenth Ave @ 40th St*** | NORTHEAST | 1 | 15 | 5 | 15 | 329 | A | 1 | 15 | 5 | 15 | 36 | 142 | A | | 1 | 5 | | 142 | A | |
| | SOUTHEAST | 2 | 15 | 6 | 15 | 413 | A | 2 | 15 | 6 | 15 | 44 | 189 | A | | 2 | 6 | | 189 | A | |
| | SOUTHWEST | 3 | 12 | 7 | 13 | 451 | A | 3 | 12 | 7 | 13 | 36 | 326 | A | | 3 | 7 | | 326 | A | |
| | NORTHWEST | 4 | 12 | 8 | 13 | 300 | A | 4 | 12 | 8 | 13 | 44 | 205 | A | | 4 | 8 | | 205 | A | |
| ***Tenth Ave @ 41st St*** | NORTHEAST | 1 | 15 | 5 | 16 | 187 | A | 1 | 15 | 5 | 16 | 45 | 84 | B | | 1 | 5 | | 84 | B | |
| | SOUTHEAST | 2 | 16 | 6 | 10 | 415 | A | 2 | 16 | 6 | 10 | 35 | 201 | A | | 2 | 6 | | 201 | A | |
| | SOUTHWEST | 3 | 10 | 7 | 17 | 264 | A | 3 | 10 | 7 | 17 | 45 | 208 | A | | 3 | 7 | | 208 | A | |
| | NORTHWEST | 4 | 14 | 8 | 12 | 247 | A | 4 | 14 | 8 | 12 | 35 | 151 | A | | 4 | 8 | | 151 | A | |
| ***Tenth Ave @ 42nd St*** | NORTHEAST | 1 | 20 | 5 | 16 | 230 | A | 1 | 20 | 5 | 16 | 28 | 145 | A | | 1 | 5 | | 145 | A | |
| | SOUTHEAST | 2 | 22 | 6 | 16 | 197 | A | 2 | 22 | 6 | 16 | 52 | 90 | B | | 2 | 6 | | 90 | B | |
| | SOUTHWEST | 3 | 21 | 7 | 15 | 145 | A | 3 | 21 | 7 | 15 | 28 | 87 | B | | 3 | 7 | | 87 | B | |
| | NORTHWEST | 4 | 20 | 8 | 15 | 134 | A | 4 | 20 | 8 | 15 | 52 | 102 | B | | 4 | 8 | | 102 | B | |
| ***Dyer @ 42nd St*** | NORTHEAST | 1 | | 5 | 6 | N/A | N/A | 1 | | 5 | 6 | 34 | N/A | N/A | | 1 | 5 | | N/A | N/A | |
| | SOUTHEAST | 2 | | 6 | 4 | 59 | B | 2 | | 6 | 4 | 46 | 59 | B | | 2 | 6 | | 59 | B | |
| | SOUTHWEST | 3 | 21 | 7 | 20 | 134 | A | 3 | 21 | 7 | 20 | 34 | 134 | A | | 3 | 7 | | 134 | A | |
| | NORTHWEST | 4 | 20 | 8 | 21 | N/A | N/A | 4 | 20 | 8 | 21 | 46 | N/A | N/A | | 4 | 8 | | N/A | N/A | |
| ***Ninth Ave @ 30th St*** | NORTHEAST | 1 | 16 | 5 | 16 | 54 | B | 1 | 16 | 5 | 16 | 36 | 52 | B | | 1 | 5 | | 52 | B | |
| | SOUTHEAST | 2 | 15 | 6 | 16 | 79 | B | 2 | 15 | 6 | 16 | 44 | 76 | B | | 2 | 6 | | 76 | B | |
| | SOUTHWEST | 3 | 13 | 7 | 14 | 87 | B | 3 | 13 | 7 | 14 | 36 | 84 | B | | 3 | 7 | | 84 | B | |
| | NORTHWEST | 4 | 13 | 8 | 12 | 66 | B | 4 | 13 | 8 | 12 | 44 | 64 | B | | 4 | 8 | | 64 | B | |
| ***Ninth Ave @ 31st St*** | NORTHEAST | 1 | 15 | 5 | 15 | 18 | D | 1 | 15 | 5 | 15 | 30 | 17 | D | | 1 | 5 | | 17 | D | |
| | SOUTHEAST | 2 | 13 | 6 | 15 | 31 | C | 2 | 13 | 6 | 15 | 50 | 29 | C | | 2 | 6 | | 29 | C | |
| | SOUTHWEST | 3 | 13 | 7 | 13 | 56 | B | 3 | 13 | 7 | 13 | 30 | 52 | B | | 3 | 7 | | 52 | B | |
| | NORTHWEST | 4 | 13 | 8 | 13 | 51 | B | 4 | 13 | 8 | 13 | 50 | 47 | B | | 4 | 8 | | 47 | B | |
| ***Ninth Ave @ 33rd St*** | NORTHEAST | 1 | 15 | 5 | 15 | 23 | D | 1 | 15 | 5 | 15 | 30 | 21 | D | | 1 | 5 | | 21 | D | |
| | SOUTHEAST | 2 | 15 | 6 | 15 | 16 | D | 2 | 15 | 6 | 15 | 50 | 15 | D | | 2 | 6 | | 15 | D | |
| | SOUTHWEST | 3 | 13 | 7 | 13 | 27 | C | 3 | 13 | 7 | 13 | 30 | 25 | C | | 3 | 7 | | 25 | C | |
| | NORTHWEST | 4 | 13 | 8 | 13 | 44 | B | 4 | 13 | 8 | 13 | 50 | 40 | B | | 4 | 8 | | 40 | B | |

# Appendix S.5.4

**Pedestrian Improvement Analysis - Corner Level of Service**

**2010 Future Conditions (MD)**

| Intersection | Corner Location | 2010 Future without the Proposed Action | | | | | | 2010 Future with the Proposed Action | | | | | | | 2010 Future with the Proposed Action (Improvement) | | | | | |
|---|---|---|---|---|---|---|---|---|---|---|---|---|---|---|---|---|---|---|---|---|
| | | Sidewalk Width for No Build Condition | | | | Pedestrian Flow Rate (s.f./ped.) | Level of Service | Sidewalk Width for Build Condition | | | | Pedestrian Green | Pedestrian Flow Rate (s.f./ped.) | Level of Service | Impact? | Proposed Sidewalk Width Improvement | | Signal Timing | Pedestrian Flow Rate (s.f./ped.) | Level of Service | Still Impact? |
| ***Ninth Ave @ 34th St*** | NORTHEAST | 1 | 15 | 5 | 15 | 56 | B | 1 | 15 | 5 | 15 | 30 | 51 | B | | 1 | 5 | 33 | 51 | B | |
| | SOUTHEAST | 2 | 15 | 6 | 15 | 50 | B | 2 | 15 | 6 | 15 | 35 | 43 | B | | 2 | 6 | 32 | 43 | B | |
| | SOUTHWEST | 3 | 23 | 7 | 20 | 63 | B | 3 | 23 | 7 | 20 | 30 | 50 | B | | 3 | 7 | 33 | 50 | B | |
| | NORTHWEST | 4 | 23 | 8 | 20 | 62 | B | 4 | 23 | 8 | 20 | 35 | 55 | B | | 4 | 8 | 32 | 56 | B | |
| ***Ninth Ave @ 37th St*** | NORTHEAST | 1 | 15 | 5 | 15 | 76 | B | 1 | 15 | 5 | 15 | 30 | 64 | B | | 1 | 5 | | 64 | B | |
| | SOUTHEAST | 2 | 15 | 6 | 15 | 82 | B | 2 | 15 | 6 | 15 | 50 | 69 | B | | 2 | 6 | | 69 | B | |
| | SOUTHWEST | 3 | 12 | 7 | 12 | 79 | B | 3 | 12 | 7 | 12 | 30 | 68 | B | | 3 | 7 | | 68 | B | |
| | NORTHWEST | 4 | 12 | 8 | 12 | 56 | B | 4 | 12 | 8 | 12 | 50 | 49 | B | | 4 | 8 | | 49 | B | |
| ***Ninth Ave @ 38th St*** | NORTHEAST | 1 | 15 | 5 | 15 | 178 | A | 1 | 15 | 5 | 15 | 30 | 130 | A | | 1 | 5 | 31 | 130 | A | |
| | SOUTHEAST | 2 | 15 | 6 | 15 | 166 | A | 2 | 15 | 6 | 15 | 50 | 115 | B | | 2 | 6 | 49 | 115 | B | |
| | SOUTHWEST | 3 | 11 | 7 | 11 | 169 | A | 3 | 11 | 7 | 11 | 30 | 139 | A | | 3 | 7 | 31 | 139 | A | |
| | NORTHWEST | 4 | 11 | 8 | 11 | 157 | A | 4 | 11 | 8 | 11 | 50 | 149 | A | | 4 | 8 | 49 | 148 | A | |
| ***Ninth Ave @ 39th St*** | NORTHEAST | 1 | 15 | 5 | 15 | 101 | B | 1 | 15 | 5 | 15 | 30 | 89 | B | | 1 | 5 | | 89 | B | |
| | SOUTHEAST | 2 | 15 | 6 | 15 | 87 | B | 2 | 15 | 6 | 15 | 50 | 78 | B | | 2 | 6 | | 78 | B | |
| | SOUTHWEST | 3 | 12 | 7 | 12 | 160 | A | 3 | 12 | 7 | 12 | 30 | 152 | A | | 3 | 7 | | 152 | A | |
| | NORTHWEST | 4 | 12 | 8 | 12 | 197 | A | 4 | 12 | 8 | 12 | 50 | 177 | A | | 4 | 8 | | 177 | A | |
| ***Ninth Ave @ 42nd St*** | NORTHEAST | 1 | 16 | 5 | 14 | 13 | E | 1 | 16 | 5 | 14 | 29 | 9 | E | Yes | 1 | 5 | 28 | 9 | E | Yes |
| | SOUTHEAST | 2 | 10 | 6 | 15 | 57 | B | 2 | 10 | 6 | 15 | 35 | 40 | B | | 2 | 6 | | 40 | B | |
| | SOUTHWEST | 3 | 11 | 7 | 20 | 71 | B | 3 | 11 | 7 | 20 | 29 | 47 | B | | 3 | 7 | 28 | 47 | B | |
| | NORTHWEST | 4 | 19 | 8 | 21 | 83 | B | 4 | 19 | 8 | 21 | 35 | 64 | B | | 4 | 8 | | 64 | B | |
| ***Eighth Ave @ 30th St*** | NORTHEAST | 1 | 14 | 5 | 15 | 83 | B | 1 | 14 | 5 | 15 | 40 | 81 | B | | 1 | 5 | | 81 | B | |
| | SOUTHEAST | 2 | 15 | 6 | 14 | 105 | B | 2 | 15 | 6 | 14 | 40 | 104 | B | | 2 | 6 | | 104 | B | |
| | SOUTHWEST | 3 | 13 | 7 | 14 | 104 | B | 3 | 13 | 7 | 14 | 40 | 103 | B | | 3 | 7 | | 103 | B | |
| | NORTHWEST | 4 | 14 | 8 | 13 | 91 | B | 4 | 14 | 8 | 13 | 40 | 90 | B | | 4 | 8 | | 90 | B | |
| ***Eighth Ave @ 31st St*** | NORTHEAST | 1 | 16 | 5 | 15 | 307 | A | 1 | 16 | 5 | 15 | 40 | 304 | A | | 1 | 5 | | 304 | A | |
| | SOUTHEAST | 2 | 24 | 6 | 15 | 63 | B | 2 | 24 | 6 | 15 | 40 | 62 | B | | 2 | 6 | | 62 | B | |
| | SOUTHWEST | 3 | 49 | 7 | 13 | 46 | B | 3 | 49 | 7 | 13 | 40 | 46 | B | | 3 | 7 | | 46 | B | |
| | NORTHWEST | 4 | 14 | 8 | 24 | 72 | B | 4 | 14 | 8 | 24 | 40 | 71 | B | | 4 | 8 | | 71 | B | |
| ***Eighth Ave @ 33rd St*** | NORTHEAST | 1 | 15 | 5 | 43 | 41 | B | 1 | 15 | 5 | 43 | 47 | 41 | B | | 1 | 5 | | 41 | B | |
| | SOUTHEAST | 2 | 19 | 6 | 16 | 224 | A | 2 | 19 | 6 | 16 | 33 | 222 | A | | 2 | 6 | | 222 | A | |
| | SOUTHWEST | 3 | 17 | 7 | 24 | 27 | C | 3 | 17 | 7 | 24 | 47 | 27 | C | | 3 | 7 | | 27 | C | |
| | NORTHWEST | 4 | 43 | 8 | 14 | 16 | D | 4 | 43 | 8 | 14 | 33 | 16 | D | | 4 | 8 | | 16 | D | |
| ***Eighth Ave @ 34th St*** | NORTHEAST | 1 | 15 | 5 | 15 | 44 | B | 1 | 15 | 5 | 15 | 40 | 42 | B | | 1 | 5 | 30 | 39 | C | |
| | SOUTHEAST | 2 | 15 | 6 | 15 | 54 | B | 2 | 15 | 6 | 15 | 40 | 51 | B | | 2 | 6 | 34 | 48 | B | |
| | SOUTHWEST | 3 | 22 | 7 | 22 | 42 | B | 3 | 22 | 7 | 22 | 40 | 41 | B | | 3 | 7 | 30 | 38 | C | |
| | NORTHWEST | 4 | 22 | 8 | 22 | 34 | C | 4 | 22 | 8 | 22 | 40 | 33 | C | | 4 | 8 | 34 | 30 | C | |
| ***Eighth Ave @ 37th St*** | NORTHEAST | 1 | 15 | 5 | 15 | 34 | C | 1 | 15 | 5 | 15 | 40 | 33 | C | | 1 | 5 | | 33 | C | |
| | SOUTHEAST | 2 | 15 | 6 | 15 | 32 | C | 2 | 15 | 6 | 15 | 40 | 31 | C | | 2 | 6 | | 31 | C | |
| | SOUTHWEST | 3 | 12 | 7 | 12 | 25 | C | 3 | 12 | 7 | 12 | 40 | 24 | C | | 3 | 7 | | 24 | C | |
| | NORTHWEST | 4 | 12 | 8 | 13 | 31 | C | 4 | 12 | 8 | 13 | 40 | 30 | C | | 4 | 8 | | 30 | C | |
| ***Eighth Ave @ 38th St*** | NORTHEAST | 1 | 15 | 5 | 15 | 50 | B | 1 | 15 | 5 | 15 | 40 | 48 | B | | 1 | 5 | | 48 | B | |
| | SOUTHEAST | 2 | 15 | 6 | 15 | 42 | B | 2 | 15 | 6 | 15 | 40 | 41 | B | | 2 | 6 | | 41 | B | |
| | SOUTHWEST | 3 | 12 | 7 | 11 | 49 | B | 3 | 12 | 7 | 11 | 40 | 47 | B | | 3 | 7 | | 47 | B | |
| | NORTHWEST | 4 | 12 | 8 | 11 | 45 | B | 4 | 12 | 8 | 11 | 40 | 43 | B | | 4 | 8 | | 43 | B | |

# Appendix S.5.4

**Pedestrian Improvement Analysis - Corner Level of Service**

**2010 Future Conditions (MD)**

| Intersection | Corner Location | 2010 Future without the Proposed Action | | | | | 2010 Future with the Proposed Action | | | | | | | 2010 Future with the Proposed Action (Improvement) | | | | | |
|---|---|---|---|---|---|---|---|---|---|---|---|---|---|---|---|---|---|---|---|
| | | Sidewalk Width for No Build Condition | | | | Pedestrian Flow Rate (s.f./ped.) | Level of Service | Sidewalk Width for Build Condition | | | | Pedestrian Green | Pedestrian Flow Rate (s.f./ped.) | Level of Service | Impact? | Proposed Sidewalk Width Improvement | | Signal Timing | Pedestrian Flow Rate (s.f./ped.) | Level of Service | Still Impact? |
| ***Eighth Ave @ 39th St*** | NORTHEAST | 1 | 15 | 5 | 15 | 29 | C | 1 | 15 | 5 | 15 | 40 | 27 | C | | 1 | 5 | | 27 | C | |
| | SOUTHEAST | 2 | 15 | 6 | 15 | 10 | E | 2 | 15 | 6 | 15 | 40 | 9 | E | Yes | 2 | 6 | | 9 | E | Yes |
| | SOUTHWEST | 3 | 12 | 7 | 12 | 14 | E | 3 | 12 | 7 | 12 | 40 | 14 | E | | 3 | 7 | | 14 | E | |
| | NORTHWEST | 4 | 12 | 8 | 12 | 24 | C | 4 | 12 | 8 | 12 | 40 | 22 | D | | 4 | 8 | | 22 | D | |
| ***Eighth Ave @ 42nd St*** | NORTHEAST | 1 | 15 | 5 | 12 | 42 | B | 1 | 15 | 5 | 12 | 25 | 38 | C | | 1 | 5 | | 38 | C | |
| | SOUTHEAST | 2 | 16 | 6 | 29 | 8 | E | 2 | 16 | 6 | 29 | 35 | 6 | E | Yes | 2 | 6 | | 6 | E | Yes |
| | SOUTHWEST | 3 | 23 | 7 | 34 | 128 | B | 3 | 23 | 7 | 34 | 25 | 115 | B | | 3 | 7 | | 115 | B | |
| | NORTHWEST | 4 | 16 | 8 | 20 | 38 | C | 4 | 16 | 8 | 20 | 35 | 34 | C | | 4 | 8 | | 34 | C | |
| ***Seventh Ave @ 31st St*** | NORTHEAST | 1 | 23 | 5 | 20 | 43 | B | 1 | 23 | 5 | 20 | 38 | 43 | B | | 1 | 5 | | 43 | B | |
| | SOUTHEAST | 2 | 23 | 6 | 20 | 52 | B | 2 | 23 | 6 | 20 | 42 | 51 | B | | 2 | 6 | | 51 | B | |
| | SOUTHWEST | 3 | 13 | 7 | 13 | 71 | B | 3 | 13 | 7 | 13 | 38 | 71 | B | | 3 | 7 | | 71 | B | |
| | NORTHWEST | 4 | 13 | 8 | 18 | 92 | B | 4 | 13 | 8 | 18 | 42 | 92 | B | | 4 | 8 | | 92 | B | |
| ***Seventh Ave @ 33rd St*** | NORTHEAST | 1 | 20 | 5 | 20 | 26 | C | 1 | 20 | 5 | 20 | 22 | 26 | C | | 1 | 5 | | 26 | C | |
| | SOUTHEAST | 2 | 20 | 6 | 40 | 21 | D | 2 | 20 | 6 | 40 | 58 | 21 | D | | 2 | 6 | | 21 | D | |
| | SOUTHWEST | 3 | 13 | 7 | 40 | 213 | A | 3 | 13 | 7 | 40 | 22 | 213 | A | | 3 | 7 | | 213 | A | |
| | NORTHWEST | 4 | 13 | 8 | 15 | 34 | C | 4 | 13 | 8 | 15 | 58 | 34 | C | | 4 | 8 | | 34 | C | |
| ***Seventh Ave @ 34th St*** | NORTHEAST | 1 | 20 | 5 | 20 | 46 | B | 1 | 20 | 5 | 20 | 35 | 45 | B | | 1 | 5 | | 45 | B | |
| | SOUTHEAST | 2 | 20 | 6 | 20 | 58 | B | 2 | 20 | 6 | 20 | 44 | 56 | B | | 2 | 6 | | 56 | B | |
| | SOUTHWEST | 3 | 23 | 7 | 23 | 60 | B | 3 | 23 | 7 | 23 | 35 | 58 | B | | 3 | 7 | | 58 | B | |
| | NORTHWEST | 4 | 23 | 8 | 23 | 42 | B | 4 | 23 | 8 | 23 | 44 | 41 | B | | 4 | 8 | | 41 | B | |
| ***Sixth Ave @ 33rd St*** | NORTHEAST | 1 | 34 | 5 | 27 | 54 | B | 1 | 34 | 5 | 27 | 27 | 54 | B | | 1 | 5 | | 54 | B | |
| | SOUTHEAST | 2 | 28 | 6 | 24 | 56 | B | 2 | 28 | 6 | 24 | 90 | 56 | B | | 2 | 6 | | 56 | B | |
| | SOUTHWEST | 3 | 13 | 7 | 13 | 35 | C | 3 | 13 | 7 | 13 | 27 | 35 | C | | 3 | 7 | | 35 | C | |
| | NORTHWEST | 4 | 13 | 8 | 13 | 58 | B | 4 | 13 | 8 | 13 | 39 | 58 | B | | 4 | 8 | | 58 | B | |
| ***Sixth Ave @ 34th St*** | NORTHEAST | 1 | | 5 | 17 | 17 | D | 1 | | 5 | 17 | 27 | 17 | D | | 1 | 5 | | 17 | D | |
| | SOUTHEAST | 2 | 17 | 6 | | 19 | D | 2 | 17 | 6 | | 53 | 19 | D | | 2 | 6 | | 19 | D | |
| | SOUTHWEST | 3 | 23 | 7 | | N/A | N/A | 3 | 23 | 7 | | 27 | N/A | N/A | | 3 | 7 | | N/A | N/A | |
| | NORTHWEST | 4 | 23 | 8 | | N/A | N/A | 4 | 23 | 8 | | 53 | N/A | N/A | | 4 | 8 | | N/A | N/A | |
| ***Broadway @ 34th St*** | NORTHEAST | 1 | 30 | 5 | | N/A | N/A | 1 | 30 | 5 | | 27 | N/A | N/A | | 1 | 5 | | N/A | N/A | |
| | SOUTHEAST | 2 | | 6 | 30 | N/A | N/A | 2 | | 6 | 30 | 53 | N/A | N/A | | 2 | 6 | | N/A | N/A | |
| | SOUTHWEST | 3 | | 7 | 23 | 30 | C | 3 | | 7 | 23 | 27 | 30 | C | | 3 | 7 | | 30 | C | |
| | NORTHWEST | 4 | | 8 | 23 | 29 | C | 4 | | 8 | 23 | 53 | 29 | C | | 4 | 8 | | 29 | C | |
| ***Blvd @ 33rd St*** | NORTHEAST | | | | | N/A | N/A | 1 | 10 | 5 | | 30 | 86 | B | | 1 | 5 | | 86 | B | |
| | SOUTHEAST | | | | | N/A | N/A | 2 | 13 | 6 | | 50 | N/A | N/A | | 2 | 6 | | N/A | N/A | |
| | SOUTHWEST | | | | | N/A | N/A | 3 | 13 | 7 | 13 | 30 | N/A | N/A | | 3 | 7 | | N/A | N/A | |
| | NORTHWEST | | | | | N/A | N/A | 4 | 13 | 8 | 13 | 50 | 49 | B | | 4 | 8 | | 49 | B | |
| ***Blvd @ 34th St*** | NORTHEAST | | | | | N/A | N/A | 1 | 18 | 5 | 13 | 30 | 66 | B | | 1 | 5 | | 66 | B | |
| | SOUTHEAST | | | | | N/A | N/A | 2 | 13 | 6 | 13 | 50 | 119 | B | | 2 | 6 | | 119 | B | |
| | SOUTHWEST | | | | | N/A | N/A | 3 | 20 | 7 | 20 | 30 | 84 | B | | 3 | 7 | | 84 | B | |
| | NORTHWEST | | | | | N/A | N/A | 4 | 20 | 8 | 30 | 50 | 134 | A | | 4 | 8 | | 134 | A | |

# Appendix S.5.4

## Pedestrian Improvement Analysis - Corner Level of Service

### 2010 Future Conditions (PM)

| Intersection | Corner Location | 2010 Future without the Proposed Action | | | | | | 2010 Future with the Proposed Action | | | | | | | 2010 Future with the Proposed Action (Improvement) | | | | | |
|---|---|---|---|---|---|---|---|---|---|---|---|---|---|---|---|---|---|---|---|---|
| | | Sidewalk Width for No Build Condition | | | | Pedestrian Flow Rate (s.f./ped.) | Level of Service | Sidewalk Width for Build Condition | | | | Pedestrian Green | Pedestrian Flow Rate (s.f./ped.) | Level of Service | Impact? | Proposed Sidewalk Width Improvement | | Signal Timing | Pedestrian Flow Rate (s.f./ped.) | Level of Service | Still Impact? |
| ***Twelfth Ave @ 30th St*** | NORTHEAST | 1 | | 5 | 15 | 2995 | A | 1 | | 5 | 15 | 18 | 2662 | A | | 1 | 5 | | 2661 | A | |
| | SOUTHEAST | 2 | 11 | 6 | | 5092 | A | 2 | 11 | 6 | | 78 | 3955 | A | | 2 | 6 | 77 | 3955 | A | |
| | SOUTHWEST | 3 | 13 | 7 | | N/A | N/A | 3 | 13 | 7 | | 18 | N/A | N/A | | 3 | 7 | | N/A | N/A | |
| | NORTHWEST | 4 | 13 | 8 | | N/A | N/A | 4 | 13 | 8 | | 78 | N/A | N/A | | 4 | 8 | 77 | N/A | N/A | |
| ***Twelfth Ave @ 34th St*** | NORTHEAST | 1 | | 5 | 12 | 1734 | A | 1 | | 5 | 12 | 29 | 1342 | A | | 1 | 5 | | 1342 | A | |
| | SOUTHEAST | 2 | 12 | 6 | | 368 | A | 2 | 12 | 6 | | 67 | 334 | A | | 2 | 6 | | 334 | A | |
| | SOUTHWEST | 3 | 18 | 7 | | N/A | N/A | 3 | 18 | 7 | | 29 | N/A | N/A | | 3 | 7 | | N/A | N/A | |
| | NORTHWEST | 4 | 18 | 8 | | N/A | N/A | 4 | 18 | 8 | | 67 | N/A | N/A | | 4 | 8 | | N/A | N/A | |
| ***Twelfth Ave @ 39th St*** | NORTHEAST | 1 | | 5 | 18 | 6202 | A | 1 | | 5 | 18 | 30 | N/A | N/A | | 1 | 5 | | N/A | N/A | |
| | SOUTHEAST | 2 | 13 | 6 | | 669 | A | 2 | 13 | 6 | | 53 | N/A | N/A | | 2 | 6 | 68 | N/A | N/A | |
| | SOUTHWEST | 3 | 13 | 7 | | N/A | N/A | 3 | | 7 | | 30 | N/A | N/A | | 3 | 7 | | N/A | N/A | |
| | NORTHWEST | 4 | 13 | 8 | | N/A | N/A | 4 | | 8 | | 53 | N/A | N/A | | 4 | 8 | 68 | N/A | N/A | |
| ***Twelfth Ave @ 40th St*** | NORTHEAST | 1 | | 5 | 14 | 6298 | A | 1 | | 5 | 14 | 0 | N/A | N/A | | 1 | 5 | | N/A | N/A | |
| | SOUTHEAST | 2 | 13 | 6 | | 5478 | A | 2 | 13 | 6 | | 66 | N/A | N/A | | 2 | 6 | | N/A | N/A | |
| | SOUTHWEST | 3 | 11 | 7 | | N/A | N/A | 3 | | 7 | | 0 | N/A | N/A | | 3 | 7 | | N/A | N/A | |
| | NORTHWEST | 4 | 12 | 8 | | N/A | N/A | 4 | | 8 | | 66 | N/A | N/A | | 4 | 8 | | N/A | N/A | |
| ***Twelfth Ave @ 42nd St*** | NORTHEAST | 1 | | 5 | 20 | 402 | A | 1 | | 5 | 20 | 33 | 409 | A | | 1 | 5 | 31 | 408 | A | |
| | SOUTHEAST | 2 | 20 | 6 | | 922 | A | 2 | 20 | 6 | | 60 | 963 | A | | 2 | 6 | 59 | 962 | A | |
| | SOUTHWEST | 3 | 15 | 7 | | N/A | N/A | 3 | 15 | 7 | | 33 | N/A | N/A | | 3 | 7 | 31 | N/A | N/A | |
| | NORTHWEST | 4 | 26 | 8 | | N/A | N/A | 4 | 26 | 8 | | 60 | N/A | N/A | | 4 | 8 | 59 | N/A | N/A | |
| ***Eleventh Ave @ 29th St*** | NORTHEAST | 1 | 15 | 5 | 15 | 903 | A | 1 | 15 | 5 | 15 | 40 | 184 | A | | 1 | 5 | | 184 | A | |
| | SOUTHEAST | 2 | 15 | 6 | 15 | 764 | A | 2 | 15 | 6 | 15 | 40 | 430 | A | | 2 | 6 | | 430 | A | |
| | SOUTHWEST | 3 | 13 | 7 | 13 | 1427 | A | 3 | 13 | 7 | 13 | 40 | 859 | A | | 3 | 7 | | 859 | A | |
| | NORTHWEST | 4 | 13 | 8 | 13 | 1561 | A | 4 | 13 | 8 | 13 | 40 | 368 | A | | 4 | 8 | | 368 | A | |
| ***Eleventh Ave @ 30th St*** | NORTHEAST | 1 | 15 | 5 | 15 | 641 | A | 1 | 15 | 5 | 15 | 40 | 222 | A | | 1 | 5 | | 222 | A | |
| | SOUTHEAST | 2 | 15 | 6 | 15 | 909 | A | 2 | 15 | 6 | 15 | 40 | 286 | A | | 2 | 6 | | 286 | A | |
| | SOUTHWEST | 3 | 13 | 7 | 13 | 1216 | A | 3 | 13 | 7 | 13 | 40 | 190 | A | | 3 | 7 | | 190 | A | |
| | NORTHWEST | 4 | 13 | 8 | 13 | 728 | A | 4 | 13 | 8 | 13 | 40 | 152 | A | | 4 | 8 | | 152 | A | |
| ***Eleventh Ave @ 33rd St*** | NORTHEAST | 1 | 15 | 5 | 15 | 513 | A | 1 | 15 | 5 | 15 | 25 | 168 | A | | 1 | 5 | | 168 | A | |
| | SOUTHEAST | 2 | 15 | 6 | 15 | 1266 | A | 2 | 15 | 6 | 15 | 55 | 230 | A | | 2 | 6 | | 230 | A | |
| | SOUTHWEST | 3 | 13 | 7 | 13 | 5492 | A | 3 | 13 | 7 | | 25 | N/A | N/A | | 3 | 7 | | N/A | N/A | |
| | NORTHWEST | 4 | 13 | 8 | 13 | 5484 | A | 4 | 13 | 8 | | 55 | N/A | N/A | | 4 | 8 | | N/A | N/A | |
| ***Eleventh Ave @ 34th St*** | NORTHEAST | 1 | 15 | 5 | 15 | 401 | A | 1 | 15 | 5 | 15 | 24 | 257 | A | | 1 | 5 | 40 | 259 | A | |
| | SOUTHEAST | 2 | 12 | 6 | 15 | 504 | A | 2 | 17 | 6 | 15 | 56 | 106 | B | | 2 | 6 | 40 | 109 | B | |
| | SOUTHWEST | 3 | 20 | 7 | 20 | 536 | A | 3 | 30 | 7 | 20 | 24 | 100 | B | | 3 | 7 | 40 | 99 | B | |
| | NORTHWEST | 4 | 20 | 8 | 20 | 507 | A | 4 | 20 | 8 | 20 | 56 | 129 | B | | 4 | 8 | 40 | 128 | B | |
| ***Eleventh Ave @ 35th St*** | NORTHEAST | 1 | 19 | 5 | 11 | 1246 | A | 1 | 19 | 5 | 16 | 40 | 317 | A | | 1 | 5 | | 317 | A | |
| | SOUTHEAST | 2 | 15 | 6 | 15 | 984 | A | 2 | 15 | 6 | 15 | 40 | 270 | A | | 2 | 6 | | 270 | A | |
| | SOUTHWEST | 3 | 14 | 7 | | N/A | N/A | 3 | 14 | 7 | | 40 | N/A | N/A | | 3 | 7 | | N/A | N/A | |
| | NORTHWEST | 4 | 14 | 8 | | N/A | N/A | 4 | 19 | 8 | | 40 | N/A | N/A | | 4 | 8 | | N/A | N/A | |
| ***Eleventh Ave @ 36th St*** | NORTHEAST | 1 | 15 | 5 | 15 | 668 | A | 1 | 15 | 5 | 15 | 22 | 218 | A | | 1 | 5 | | 218 | A | |
| | SOUTHEAST | 2 | 9 | 6 | 17 | 768 | A | 2 | 9 | 6 | 17 | 22 | 87 | B | | 2 | 6 | | 87 | B | |
| | SOUTHWEST | 3 | 13 | 7 | | N/A | N/A | 3 | 13 | 7 | | 22 | N/A | N/A | | 3 | 7 | | N/A | N/A | |
| | NORTHWEST | 4 | 10 | 8 | | N/A | N/A | 4 | 10 | 8 | | 22 | N/A | N/A | | 4 | 8 | | N/A | N/A | |

# Appendix S.5.4

## Pedestrian Improvement Analysis - Corner Level of Service

### 2010 Future Conditions (PM)

| Intersection | Corner Location | 2010 Future without the Proposed Action | | | | | | 2010 Future with the Proposed Action | | | | | | | 2010 Future with the Proposed Action (Improvement) | | | | | |
|---|---|---|---|---|---|---|---|---|---|---|---|---|---|---|---|---|---|---|---|---|
| | | Sidewalk Width for No Build Condition | | | | Pedestrian Flow Rate (s.f./ped.) | Level of Service | Sidewalk Width for Build Condition | | | | Pedestrian Green | Pedestrian Flow Rate (s.f./ped.) | Level of Service | Impact? | Proposed Sidewalk Width Improvement | | Signal Timing | Pedestrian Flow Rate (s.f./ped.) | Level of Service | Still Impact? |
| ***Eleventh Ave @ 37th St*** | NORTHEAST | 1 | 15 | 5 | 10 | 534 | A | 1 | 15 | 5 | 10 | 22 | 176 | A | | 1 | 5 | 24 | 176 | A | |
| | SOUTHEAST | 2 | 10 | 6 | 15 | 666 | A | 2 | 10 | 6 | 15 | 58 | 190 | A | | 2 | 6 | 56 | 190 | A | |
| | SOUTHWEST | 3 | 12 | 7 | | N/A | N/A | 3 | 12 | 7 | | 22 | N/A | N/A | | 3 | 7 | 24 | N/A | N/A | |
| | NORTHWEST | 4 | 12 | 8 | | N/A | N/A | 4 | 12 | 8 | | 58 | N/A | N/A | | 4 | 8 | 56 | N/A | N/A | |
| ***Eleventh Ave @ 38th St*** | NORTHEAST | 1 | 15 | 5 | 10 | 3450 | A | 1 | 15 | 5 | 10 | 22 | 435 | A | | 1 | 5 | | 435 | A | |
| | SOUTHEAST | 2 | 10 | 6 | 15 | 1361 | A | 2 | 10 | 6 | 15 | 22 | 335 | A | | 2 | 6 | | 335 | A | |
| | SOUTHWEST | 3 | 11 | 7 | | N/A | N/A | 3 | 11 | 7 | | 22 | N/A | N/A | | 3 | 7 | | N/A | N/A | |
| | NORTHWEST | 4 | 11 | 8 | | N/A | N/A | 4 | 11 | 8 | | 22 | N/A | N/A | | 4 | 8 | | N/A | N/A | |
| ***Eleventh Ave @ 39th St*** | NORTHEAST | 1 | 14 | 5 | 10 | 2113 | A | 1 | 14 | 5 | 10 | 31 | 994 | A | | 1 | 5 | | 994 | A | |
| | SOUTHEAST | 2 | 10 | 6 | 15 | 295 | A | 2 | 10 | 6 | 15 | 49 | 227 | A | | 2 | 6 | | 227 | A | |
| | SOUTHWEST | 3 | 12 | 7 | 13 | 616 | A | 3 | 12 | 7 | | 31 | N/A | N/A | | 3 | 7 | | N/A | N/A | |
| | NORTHWEST | 4 | 11 | 8 | 15 | 3658 | A | 4 | 11 | 8 | | 49 | N/A | N/A | | 4 | 8 | | N/A | N/A | |
| ***Eleventh Ave @ 40th St*** | NORTHEAST | 1 | 15 | 5 | 10 | 4588 | A | 1 | 15 | 5 | 10 | 22 | 420 | A | | 1 | 5 | | 420 | A | |
| | SOUTHEAST | 2 | 10 | 6 | 15 | 902 | A | 2 | 10 | 6 | 15 | 22 | 748 | A | | 2 | 6 | | 748 | A | |
| | SOUTHWEST | 3 | 13 | 7 | 13 | 906 | A | 3 | 13 | 7 | | 22 | N/A | N/A | | 3 | 7 | | N/A | N/A | |
| | NORTHWEST | 4 | 13 | 8 | 13 | 1646 | A | 4 | 13 | 8 | | 22 | N/A | N/A | | 4 | 8 | | N/A | N/A | |
| ***Eleventh Ave @ 42nd St*** | NORTHEAST | 1 | 16 | 5 | 16 | 205 | A | 1 | 16 | 5 | 16 | 33 | 131 | A | | 1 | 5 | 26 | 128 | B | |
| | SOUTHEAST | 2 | 16 | 6 | 15 | 232 | A | 2 | 16 | 6 | 15 | 35 | 122 | B | | 2 | 6 | 29 | 119 | B | |
| | SOUTHWEST | 3 | 15 | 7 | 16 | 208 | A | 3 | 15 | 7 | 16 | 33 | 118 | B | | 3 | 7 | 26 | 116 | B | |
| | NORTHWEST | 4 | 15 | 8 | 16 | 204 | A | 4 | 15 | 8 | 16 | 35 | 131 | A | | 4 | 8 | 29 | 128 | B | |
| ***Tenth Ave @ 29th St*** | NORTHEAST | 1 | 15 | 5 | 15 | 373 | A | 1 | 15 | 5 | 15 | 30 | 360 | A | | 1 | 5 | | 360 | A | |
| | SOUTHEAST | 2 | 15 | 6 | 15 | 307 | A | 2 | 15 | 6 | 15 | 50 | 301 | A | | 2 | 6 | | 301 | A | |
| | SOUTHWEST | 3 | 13 | 7 | 13 | 225 | A | 3 | 13 | 7 | 13 | 30 | 199 | A | | 3 | 7 | | 199 | A | |
| | NORTHWEST | 4 | 13 | 8 | 13 | 248 | A | 4 | 13 | 8 | 13 | 50 | 215 | A | | 4 | 8 | | 215 | A | |
| ***Tenth Ave @ 30th St*** | NORTHEAST | 1 | 16 | 5 | 15 | 361 | A | 1 | 16 | 5 | 15 | 30 | 270 | A | | 1 | 5 | | 270 | A | |
| | SOUTHEAST | 2 | 15 | 6 | 15 | 551 | A | 2 | 15 | 6 | 15 | 50 | 447 | A | | 2 | 6 | | 447 | A | |
| | SOUTHWEST | 3 | 13 | 7 | 14 | 387 | A | 3 | 13 | 7 | 14 | 30 | 315 | A | | 3 | 7 | | 315 | A | |
| | NORTHWEST | 4 | 15 | 8 | 14 | 312 | A | 4 | 15 | 8 | 14 | 50 | 215 | A | | 4 | 8 | | 215 | A | |
| ***Tenth Ave @ 31st St*** | NORTHEAST | 1 | 15 | 5 | 15 | 505 | A | 1 | 15 | 5 | 15 | 30 | 317 | A | | 1 | 5 | | 317 | A | |
| | SOUTHEAST | 2 | 15 | 6 | 15 | 549 | A | 2 | 15 | 6 | 15 | 50 | 440 | A | | 2 | 6 | | 440 | A | |
| | SOUTHWEST | 3 | 13 | 7 | | N/A | N/A | 3 | 13 | 7 | | 30 | N/A | N/A | | 3 | 7 | | N/A | N/A | |
| | NORTHWEST | 4 | 13 | 8 | | N/A | N/A | 4 | 13 | 8 | | 50 | N/A | N/A | | 4 | 8 | | N/A | N/A | |
| ***Tenth Ave @ 33rd St*** | NORTHEAST | 1 | 15 | 5 | 15 | 353 | A | 1 | 15 | 5 | 15 | 32 | 138 | A | | 1 | 5 | | 138 | A | |
| | SOUTHEAST | 2 | 15 | 6 | 15 | 263 | A | 2 | 15 | 6 | 15 | 48 | 120 | B | | 2 | 6 | | 120 | B | |
| | SOUTHWEST | 3 | 13 | 7 | 13 | 253 | A | 3 | 13 | 7 | 13 | 32 | 99 | B | | 3 | 7 | | 99 | B | |
| | NORTHWEST | 4 | 13 | 8 | 13 | 353 | A | 4 | 13 | 8 | 13 | 48 | 132 | A | | 4 | 8 | | 132 | A | |
| ***Tenth Ave @ 34th St*** | NORTHEAST | 1 | 15 | 5 | 15 | 264 | A | 1 | 15 | 5 | 15 | 30 | 103 | B | | 1 | 5 | 37 | 103 | B | |
| | SOUTHEAST | 2 | 15 | 6 | 15 | 206 | A | 2 | 15 | 6 | 15 | 50 | 86 | B | | 2 | 6 | 43 | 87 | B | |
| | SOUTHWEST | 3 | 20 | 7 | 20 | 233 | A | 3 | 20 | 7 | 20 | 30 | 89 | B | | 3 | 7 | 37 | 92 | B | |
| | NORTHWEST | 4 | 20 | 8 | 20 | 265 | A | 4 | 20 | 8 | 20 | 50 | 99 | B | | 4 | 8 | 43 | 102 | B | |
| ***Tenth Ave @ 35th St*** | NORTHEAST | 1 | 16 | 5 | 15 | 376 | A | 1 | 16 | 5 | 15 | 30 | 209 | A | | 1 | 5 | 35 | 209 | A | |
| | SOUTHEAST | 2 | 15 | 6 | 15 | 301 | A | 2 | 15 | 6 | 15 | 50 | 86 | B | | 2 | 6 | 45 | 87 | B | |
| | SOUTHWEST | 3 | 15 | 7 | 13 | 398 | A | 3 | 15 | 7 | 13 | 30 | 113 | B | | 3 | 7 | 35 | 114 | B | |
| | NORTHWEST | 4 | 9 | 8 | 14 | 373 | A | 4 | 9 | 8 | 14 | 50 | 169 | A | | 4 | 8 | 45 | 170 | A | |

# Appendix S.5.4

## Pedestrian Improvement Analysis - Corner Level of Service

### 2010 Future Conditions (PM)

| Intersection | Corner Location | 2010 Future without the Proposed Action | | | | | | 2010 Future with the Proposed Action | | | | | | | 2010 Future with the Proposed Action (Improvement) | | | | | |
|---|---|---|---|---|---|---|---|---|---|---|---|---|---|---|---|---|---|---|---|---|
| | | Sidewalk Width for No Build Condition | | | | Pedestrian Flow Rate (s.f./ped.) | Level of Service | Sidewalk Width for Build Condition | | Pedestrian Green | Pedestrian Flow Rate (s.f./ped.) | Level of Service | Impact? | Proposed Sidewalk Width Improvement | | Signal Timing | Pedestrian Flow Rate (s.f./ped.) | Level of Service | Still Impact? |
| ***Tenth Ave @ 36th St*** | NORTHEAST | 1 | 15 | 5 | 15 | 533 | A | 1 | 15 | 5 | 15 | 30 | 415 | A | | 1 | 5 | | 415 | A | |
| | SOUTHEAST | 2 | 16 | 6 | 15 | 269 | A | 2 | 16 | 6 | 15 | 50 | 234 | A | | 2 | 6 | | 234 | A | |
| | SOUTHWEST | 3 | 12 | 7 | 12 | 213 | A | 3 | 12 | 7 | 12 | 30 | 160 | A | | 3 | 7 | | 160 | A | |
| | NORTHWEST | 4 | 12 | 8 | 12 | 349 | A | 4 | 12 | 8 | 12 | 50 | 226 | A | | 4 | 8 | | 226 | A | |
| ***Tenth Ave @ 37th St*** | NORTHEAST | 1 | 15 | 5 | 15 | 430 | A | 1 | 15 | 5 | 15 | 32 | 273 | A | | 1 | 5 | | 273 | A | |
| | SOUTHEAST | 2 | 15 | 6 | 15 | 663 | A | 2 | 15 | 6 | 15 | 48 | 389 | A | | 2 | 6 | | 389 | A | |
| | SOUTHWEST | 3 | 12 | 7 | 12 | 625 | A | 3 | 12 | 7 | 12 | 32 | 334 | A | | 3 | 7 | | 334 | A | |
| | NORTHWEST | 4 | 12 | 8 | 12 | 518 | A | 4 | 12 | 8 | 12 | 48 | 282 | A | | 4 | 8 | | 282 | A | |
| ***Tenth Ave @ 38th St*** | NORTHEAST | 1 | 15 | 5 | 15 | 638 | A | 1 | 15 | 5 | 15 | 30 | 404 | A | | 1 | 5 | | 404 | A | |
| | SOUTHEAST | 2 | 15 | 6 | 15 | 611 | A | 2 | 15 | 6 | 15 | 50 | 397 | A | | 2 | 6 | | 397 | A | |
| | SOUTHWEST | 3 | 12 | 7 | 12 | 662 | A | 3 | 12 | 7 | 12 | 30 | 414 | A | | 3 | 7 | | 414 | A | |
| | NORTHWEST | 4 | 12 | 8 | 12 | 731 | A | 4 | 12 | 8 | 12 | 50 | 448 | A | | 4 | 8 | | 448 | A | |
| ***Tenth Ave @ 39th St*** | NORTHEAST | 1 | 15 | 5 | 15 | 469 | A | 1 | 15 | 5 | 15 | 35 | 303 | A | | 1 | 5 | | 303 | A | |
| | SOUTHEAST | 2 | 15 | 6 | 15 | 376 | A | 2 | 15 | 6 | 15 | 45 | 263 | A | | 2 | 6 | | 263 | A | |
| | SOUTHWEST | 3 | 12 | 7 | 13 | 436 | A | 3 | 12 | 7 | 13 | 35 | 338 | A | | 3 | 7 | | 338 | A | |
| | NORTHWEST | 4 | 12 | 8 | 10 | 373 | A | 4 | 12 | 8 | 10 | 45 | 279 | A | | 4 | 8 | | 279 | A | |
| ***Tenth Ave @ 40th St*** | NORTHEAST | 1 | 15 | 5 | 15 | 410 | A | 1 | 15 | 5 | 15 | 36 | 152 | A | | 1 | 5 | | 152 | A | |
| | SOUTHEAST | 2 | 15 | 6 | 15 | 667 | A | 2 | 15 | 6 | 15 | 44 | 264 | A | | 2 | 6 | | 264 | A | |
| | SOUTHWEST | 3 | 12 | 7 | 13 | 881 | A | 3 | 12 | 7 | 13 | 36 | 560 | A | | 3 | 7 | | 560 | A | |
| | NORTHWEST | 4 | 12 | 8 | 13 | 628 | A | 4 | 12 | 8 | 13 | 44 | 351 | A | | 4 | 8 | | 351 | A | |
| ***Tenth Ave @ 41st St*** | NORTHEAST | 1 | 15 | 5 | 16 | 229 | A | 1 | 15 | 5 | 16 | 45 | 87 | B | | 1 | 5 | | 87 | B | |
| | SOUTHEAST | 2 | 16 | 6 | 10 | 540 | A | 2 | 16 | 6 | 10 | 35 | 219 | A | | 2 | 6 | | 219 | A | |
| | SOUTHWEST | 3 | 10 | 7 | 17 | 558 | A | 3 | 10 | 7 | 17 | 45 | 388 | A | | 3 | 7 | | 388 | A | |
| | NORTHWEST | 4 | 14 | 8 | 12 | 336 | A | 4 | 14 | 8 | 12 | 35 | 224 | A | | 4 | 8 | | 224 | A | |
| ***Tenth Ave @ 42nd St*** | NORTHEAST | 1 | 20 | 5 | 16 | 210 | A | 1 | 20 | 5 | 16 | 28 | 165 | A | | 1 | 5 | 38 | 167 | A | |
| | SOUTHEAST | 2 | 22 | 6 | 16 | 165 | A | 2 | 22 | 6 | 16 | 52 | 106 | B | | 2 | 6 | 42 | 109 | B | |
| | SOUTHWEST | 3 | 21 | 7 | 15 | 182 | A | 3 | 21 | 7 | 15 | 28 | 116 | B | | 3 | 7 | 38 | 118 | B | |
| | NORTHWEST | 4 | 20 | 8 | 15 | 139 | A | 4 | 20 | 8 | 15 | 52 | 116 | B | | 4 | 8 | 42 | 118 | B | |
| ***Dyer @ 42nd St*** | NORTHEAST | 1 | | 5 | 6 | N/A | N/A | 1 | | 5 | 6 | 34 | N/A | N/A | | 1 | 5 | | N/A | N/A | |
| | SOUTHEAST | 2 | | 6 | 4 | 30 | C | 2 | | 6 | 4 | 46 | 25 | C | | 2 | 6 | | 25 | C | |
| | SOUTHWEST | 3 | 21 | 7 | 20 | 70 | B | 3 | 21 | 7 | 20 | 34 | 62 | B | | 3 | 7 | | 62 | B | |
| | NORTHWEST | 4 | 20 | 8 | 21 | N/A | N/A | 4 | 20 | 8 | 21 | 46 | N/A | N/A | | 4 | 8 | | N/A | N/A | |
| ***Ninth Ave @ 30th St*** | NORTHEAST | 1 | 16 | 5 | 16 | 143 | A | 1 | 16 | 5 | 16 | 36 | 132 | A | | 1 | 5 | | 132 | A | |
| | SOUTHEAST | 2 | 15 | 6 | 16 | 157 | A | 2 | 15 | 6 | 16 | 44 | 151 | A | | 2 | 6 | | 151 | A | |
| | SOUTHWEST | 3 | 13 | 7 | 14 | 179 | A | 3 | 13 | 7 | 14 | 36 | 170 | A | | 3 | 7 | | 170 | A | |
| | NORTHWEST | 4 | 13 | 8 | 12 | 194 | A | 4 | 13 | 8 | 12 | 44 | 175 | A | | 4 | 8 | | 175 | A | |
| ***Ninth Ave @ 31st St*** | NORTHEAST | 1 | 15 | 5 | 15 | 59 | B | 1 | 15 | 5 | 15 | 30 | 55 | B | | 1 | 5 | | 55 | B | |
| | SOUTHEAST | 2 | 13 | 6 | 15 | 75 | B | 2 | 13 | 6 | 15 | 50 | 72 | B | | 2 | 6 | | 72 | B | |
| | SOUTHWEST | 3 | 13 | 7 | 13 | 133 | A | 3 | 13 | 7 | 13 | 30 | 124 | B | | 3 | 7 | | 124 | B | |
| | NORTHWEST | 4 | 13 | 8 | 13 | 104 | B | 4 | 13 | 8 | 13 | 50 | 94 | B | | 4 | 8 | | 94 | B | |
| ***Ninth Ave @ 33rd St*** | NORTHEAST | 1 | 15 | 5 | 15 | 46 | B | 1 | 15 | 5 | 15 | 30 | 33 | C | | 1 | 5 | | 33 | C | |
| | SOUTHEAST | 2 | 15 | 6 | 15 | 30 | C | 2 | 15 | 6 | 15 | 50 | 23 | D | | 2 | 6 | | 23 | D | |
| | SOUTHWEST | 3 | 13 | 7 | 13 | 41 | B | 3 | 13 | 7 | 13 | 30 | 30 | C | | 3 | 7 | | 30 | C | |
| | NORTHWEST | 4 | 13 | 8 | 13 | 71 | B | 4 | 13 | 8 | 13 | 50 | 52 | B | | 4 | 8 | | 52 | B | |

# Appendix S.5.4

## Pedestrian Improvement Analysis - Corner Level of Service

### 2010 Future Conditions (PM)

| Intersection | Corner Location | 2010 Future without the Proposed Action | | | | | | 2010 Future with the Proposed Action | | | | | | | | 2010 Future with the Proposed Action (Improvement) | | | | | |
|---|---|---|---|---|---|---|---|---|---|---|---|---|---|---|---|---|---|---|---|---|---|
| | | | Sidewalk Width for No Build Condition | | | Pedestrian Flow Rate (s.f./ped.) | Level of Service | | Sidewalk Width for Build Condition | | Pedestrian Green | Pedestrian Flow Rate (s.f./ped.) | Level of Service | Impact? | | Proposed Sidewalk Width Improvement | | Signal Timing | Pedestrian Flow Rate (s.f./ped.) | Level of Service | Still Impact? |
| ***Ninth Ave @ 34th St*** | NORTHEAST | 1 | 15 | 5 | 15 | 45 | B | 1 | 15 | 5 | 15 | 30 | 39 | C | | 1 | 5 | | 39 | C | |
| | SOUTHEAST | 2 | 15 | 6 | 15 | 57 | B | 2 | 15 | 6 | 15 | 35 | 47 | B | | 2 | 6 | | 47 | B | |
| | SOUTHWEST | 3 | 23 | 7 | 20 | 48 | B | 3 | 23 | 7 | 20 | 30 | 35 | C | | 3 | 7 | | 35 | C | |
| | NORTHWEST | 4 | 23 | 8 | 20 | 35 | C | 4 | 23 | 8 | 20 | 35 | 29 | C | | 4 | 8 | | 29 | C | |
| ***Ninth Ave @ 37th St*** | NORTHEAST | 1 | 15 | 5 | 15 | 71 | B | 1 | 15 | 5 | 15 | 30 | 67 | B | | 1 | 5 | | 67 | B | |
| | SOUTHEAST | 2 | 15 | 6 | 15 | 74 | B | 2 | 15 | 6 | 15 | 50 | 70 | B | | 2 | 6 | | 70 | B | |
| | SOUTHWEST | 3 | 12 | 7 | 12 | 76 | B | 3 | 12 | 7 | 12 | 30 | 73 | B | | 3 | 7 | | 73 | B | |
| | NORTHWEST | 4 | 12 | 8 | 12 | 53 | B | 4 | 12 | 8 | 12 | 50 | 51 | B | | 4 | 8 | | 51 | B | |
| ***Ninth Ave @ 38th St*** | NORTHEAST | 1 | 15 | 5 | 15 | 105 | B | 1 | 15 | 5 | 15 | 30 | 92 | B | | 1 | 5 | | 92 | B | |
| | SOUTHEAST | 2 | 15 | 6 | 15 | 111 | B | 2 | 15 | 6 | 15 | 50 | 92 | B | | 2 | 6 | | 92 | B | |
| | SOUTHWEST | 3 | 11 | 7 | 11 | 205 | A | 3 | 11 | 7 | 11 | 30 | 168 | A | | 3 | 7 | | 168 | A | |
| | NORTHWEST | 4 | 11 | 8 | 11 | 185 | A | 4 | 11 | 8 | 11 | 50 | 168 | A | | 4 | 8 | | 168 | A | |
| ***Ninth Ave @ 39th St*** | NORTHEAST | 1 | 15 | 5 | 15 | 68 | B | 1 | 15 | 5 | 15 | 30 | 65 | B | | 1 | 5 | | 65 | B | |
| | SOUTHEAST | 2 | 15 | 6 | 15 | 65 | B | 2 | 15 | 6 | 15 | 50 | 63 | B | | 2 | 6 | | 63 | B | |
| | SOUTHWEST | 3 | 12 | 7 | 12 | 123 | B | 3 | 12 | 7 | 12 | 30 | 122 | B | | 3 | 7 | | 122 | B | |
| | NORTHWEST | 4 | 12 | 8 | 12 | 124 | B | 4 | 12 | 8 | 12 | 50 | 121 | B | | 4 | 8 | | 121 | B | |
| ***Ninth Ave @ 42nd St*** | NORTHEAST | 1 | 16 | 5 | 14 | 7 | E | 1 | 16 | 5 | 14 | 29 | 3 | F | Yes | 1 | 5 | | 3 | F | Yes |
| | SOUTHEAST | 2 | 10 | 6 | 15 | 54 | B | 2 | 10 | 6 | 15 | 35 | 37 | C | | 2 | 6 | | 37 | C | |
| | SOUTHWEST | 3 | 11 | 7 | 20 | 63 | B | 3 | 11 | 7 | 20 | 29 | 36 | C | | 3 | 7 | | 36 | C | |
| | NORTHWEST | 4 | 19 | 8 | 21 | 57 | B | 4 | 19 | 8 | 21 | 35 | 42 | B | | 4 | 8 | | 42 | B | |
| ***Eighth Ave @ 30th St*** | NORTHEAST | 1 | 14 | 5 | 15 | 71 | B | 1 | 14 | 5 | 15 | 38 | 69 | B | | 1 | 5 | | 69 | B | |
| | SOUTHEAST | 2 | 15 | 6 | 14 | 98 | B | 2 | 15 | 6 | 14 | 42 | 95 | B | | 2 | 6 | | 95 | B | |
| | SOUTHWEST | 3 | 13 | 7 | 14 | 128 | B | 3 | 13 | 7 | 14 | 38 | 123 | B | | 3 | 7 | | 123 | B | |
| | NORTHWEST | 4 | 14 | 8 | 13 | 104 | B | 4 | 14 | 8 | 13 | 42 | 99 | B | | 4 | 8 | | 99 | B | |
| ***Eighth Ave @ 31st St*** | NORTHEAST | 1 | 16 | 5 | 15 | 396 | A | 1 | 16 | 5 | 15 | 40 | 385 | A | | 1 | 5 | | 385 | A | |
| | SOUTHEAST | 2 | 24 | 6 | 15 | 75 | B | 2 | 24 | 6 | 15 | 40 | 72 | B | | 2 | 6 | | 72 | B | |
| | SOUTHWEST | 3 | 49 | 7 | 13 | 68 | B | 3 | 49 | 7 | 13 | 40 | 65 | B | | 3 | 7 | | 65 | B | |
| | NORTHWEST | 4 | 14 | 8 | 24 | 108 | B | 4 | 14 | 8 | 24 | 40 | 104 | B | | 4 | 8 | | 104 | B | |
| ***Eighth Ave @ 33rd St*** | NORTHEAST | 1 | 15 | 5 | 43 | 34 | C | 1 | 15 | 5 | 43 | 47 | 31 | C | | 1 | 5 | | 31 | C | |
| | SOUTHEAST | 2 | 19 | 6 | 16 | 230 | A | 2 | 19 | 6 | 16 | 33 | 215 | A | | 2 | 6 | | 215 | A | |
| | SOUTHWEST | 3 | 17 | 7 | 24 | 28 | C | 3 | 17 | 7 | 24 | 47 | 27 | C | | 3 | 7 | | 27 | C | |
| | NORTHWEST | 4 | 43 | 8 | 14 | 13 | E | 4 | 43 | 8 | 14 | 33 | 13 | E | | 4 | 8 | | 13 | E | |
| ***Eighth Ave @ 34th St*** | NORTHEAST | 1 | 15 | 5 | 15 | 37 | C | 1 | 15 | 5 | 15 | 40 | 32 | C | | 1 | 5 | 29 | 29 | C | |
| | SOUTHEAST | 2 | 15 | 6 | 15 | 54 | B | 2 | 15 | 6 | 15 | 40 | 45 | B | | 2 | 6 | 34 | 43 | B | |
| | SOUTHWEST | 3 | 22 | 7 | 22 | 44 | B | 3 | 22 | 7 | 22 | 40 | 39 | C | | 3 | 7 | 29 | 36 | C | |
| | NORTHWEST | 4 | 22 | 8 | 22 | 37 | C | 4 | 22 | 8 | 22 | 40 | 33 | C | | 4 | 8 | 34 | 29 | C | |
| ***Eighth Ave @ 37th St*** | NORTHEAST | 1 | 15 | 5 | 15 | 32 | C | 1 | 15 | 5 | 15 | 36 | 31 | C | | 1 | 5 | | 31 | C | |
| | SOUTHEAST | 2 | 15 | 6 | 15 | 29 | C | 2 | 15 | 6 | 15 | 44 | 28 | C | | 2 | 6 | | 28 | C | |
| | SOUTHWEST | 3 | 12 | 7 | 12 | 25 | C | 3 | 12 | 7 | 12 | 36 | 24 | C | | 3 | 7 | | 24 | C | |
| | NORTHWEST | 4 | 12 | 8 | 13 | 37 | C | 4 | 12 | 8 | 13 | 44 | 36 | C | | 4 | 8 | | 36 | C | |
| ***Eighth Ave @ 38th St*** | NORTHEAST | 1 | 15 | 5 | 15 | 343 | A | 1 | 15 | 5 | 15 | 38 | 266 | A | | 1 | 5 | | 266 | A | |
| | SOUTHEAST | 2 | 15 | 6 | 15 | 196 | A | 2 | 15 | 6 | 15 | 42 | 166 | A | | 2 | 6 | | 166 | A | |
| | SOUTHWEST | 3 | 12 | 7 | 11 | 206 | A | 3 | 12 | 7 | 11 | 38 | 170 | A | | 3 | 7 | | 170 | A | |
| | NORTHWEST | 4 | 12 | 8 | 11 | 371 | A | 4 | 12 | 8 | 11 | 42 | 267 | A | | 4 | 8 | | 267 | A | |

# Appendix S.5.4

## Pedestrian Improvement Analysis - Corner Level of Service

### 2010 Future Conditions (PM)

| Intersection | Corner Location | 2010 Future without the Proposed Action | | | | | 2010 Future with the Proposed Action | | | | | | | 2010 Future with the Proposed Action (Improvement) | | | | | |
|---|---|---|---|---|---|---|---|---|---|---|---|---|---|---|---|---|---|---|---|
| | | Sidewalk Width for No Build Condition | | | | Pedestrian Flow Rate (s.f./ped.) | Level of Service | Sidewalk Width for Build Condition | | | | Pedestrian Green | Pedestrian Flow Rate (s.f./ped.) | Level of Service | Impact? | Proposed Sidewalk Width Improvement | | Signal Timing | Pedestrian Flow Rate (s.f./ped.) | Level of Service | Still Impact? |
| ***Eighth Ave @ 39th St*** | NORTHEAST | 1 | 15 | 5 | 15 | 23 | D | 1 | 15 | 5 | 15 | 40 | 22 | D | | 1 | 5 | | 22 | D | |
| | SOUTHEAST | 2 | 15 | 6 | 15 | 18 | D | 2 | 15 | 6 | 15 | 40 | 18 | D | | 2 | 6 | | 18 | D | |
| | SOUTHWEST | 3 | 12 | 7 | 12 | 7 | E | 3 | 12 | 7 | 12 | 40 | 7 | E | | 3 | 7 | | 7 | E | |
| | NORTHWEST | 4 | 12 | 8 | 12 | 18 | D | 4 | 12 | 8 | 12 | 40 | 18 | D | | 4 | 8 | | 18 | D | |
| ***Eighth Ave @ 42nd St*** | NORTHEAST | 1 | 15 | 5 | 12 | 24 | C | 1 | 15 | 5 | 12 | 25 | 22 | D | | 1 | 5 | 30 | 23 | D | |
| | SOUTHEAST | 2 | 16 | 6 | 29 | -3 | F | 2 | 16 | 6 | 29 | 35 | -4 | F | Yes | 2 | 6 | 38 | -2 | F | |
| | SOUTHWEST | 3 | 23 | 7 | 34 | 64 | B | 3 | 23 | 7 | 34 | 25 | 58 | B | | 3 | 7 | 30 | 59 | B | |
| | NORTHWEST | 4 | 16 | 8 | 20 | 7 | E | 4 | 16 | 8 | 20 | 35 | 6 | E | Yes | 4 | 8 | 38 | 8 | E | |
| ***Seventh Ave @ 31st St*** | NORTHEAST | 1 | 23 | 5 | 20 | 32 | C | 1 | 23 | 5 | 20 | 38 | 32 | C | | 1 | 5 | | 32 | C | |
| | SOUTHEAST | 2 | 23 | 6 | 20 | 31 | C | 2 | 23 | 6 | 20 | 42 | 31 | C | | 2 | 6 | | 31 | C | |
| | SOUTHWEST | 3 | 13 | 7 | 13 | 30 | C | 3 | 13 | 7 | 13 | 38 | 30 | C | | 3 | 7 | | 30 | C | |
| | NORTHWEST | 4 | 13 | 8 | 18 | 52 | B | 4 | 13 | 8 | 18 | 42 | 52 | B | | 4 | 8 | | 52 | B | |
| ***Seventh Ave @ 33rd St*** | NORTHEAST | 1 | 20 | 5 | 20 | 19 | D | 1 | 20 | 5 | 20 | 22 | 19 | D | | 1 | 5 | | 19 | D | |
| | SOUTHEAST | 2 | 20 | 6 | 40 | 20 | D | 2 | 20 | 6 | 40 | 58 | 20 | D | | 2 | 6 | | 20 | D | |
| | SOUTHWEST | 3 | 13 | 7 | 40 | 206 | A | 3 | 13 | 7 | 40 | 22 | 204 | A | | 3 | 7 | | 204 | A | |
| | NORTHWEST | 4 | 13 | 8 | 15 | 27 | C | 4 | 13 | 8 | 15 | 58 | 26 | C | | 4 | 8 | | 26 | C | |
| ***Seventh Ave @ 34th St*** | NORTHEAST | 1 | 20 | 5 | 20 | 66 | B | 1 | 20 | 5 | 20 | 35 | 63 | B | | 1 | 5 | | 63 | B | |
| | SOUTHEAST | 2 | 20 | 6 | 20 | 67 | B | 2 | 20 | 6 | 20 | 44 | 64 | B | | 2 | 6 | | 64 | B | |
| | SOUTHWEST | 3 | 23 | 7 | 23 | 73 | B | 3 | 23 | 7 | 23 | 35 | 70 | B | | 3 | 7 | | 70 | B | |
| | NORTHWEST | 4 | 23 | 8 | 23 | 60 | B | 4 | 23 | 8 | 23 | 44 | 58 | B | | 4 | 8 | | 58 | B | |
| ***Sixth Ave @ 33rd St*** | NORTHEAST | 1 | 34 | 5 | 27 | 35 | C | 1 | 34 | 5 | 27 | 27 | 34 | C | | 1 | 5 | | 34 | C | |
| | SOUTHEAST | 2 | 28 | 6 | 24 | 26 | C | 2 | 28 | 6 | 24 | 90 | 26 | C | | 2 | 6 | | 26 | C | |
| | SOUTHWEST | 3 | 13 | 7 | 13 | 20 | D | 3 | 13 | 7 | 13 | 27 | 20 | D | | 3 | 7 | | 20 | D | |
| | NORTHWEST | 4 | 13 | 8 | 13 | 46 | B | 4 | 13 | 8 | 13 | 39 | 46 | B | | 4 | 8 | | 46 | B | |
| ***Sixth Ave @ 34th St*** | NORTHEAST | 1 | | 5 | 17 | 20 | D | 1 | | 5 | 17 | 27 | 19 | D | | 1 | 5 | 25 | 19 | D | |
| | SOUTHEAST | 2 | 17 | 6 | | 22 | D | 2 | 17 | 6 | | 53 | 22 | D | | 2 | 6 | 55 | 21 | D | |
| | SOUTHWEST | 3 | 23 | 7 | | N/A | N/A | 3 | 23 | 7 | | 27 | N/A | N/A | | 3 | 7 | 25 | N/A | N/A | |
| | NORTHWEST | 4 | 23 | 8 | | N/A | N/A | 4 | 23 | 8 | | 53 | N/A | N/A | | 4 | 8 | 55 | N/A | N/A | |
| ***Broadway @ 34th St*** | NORTHEAST | 1 | 30 | 5 | | N/A | N/A | 1 | 30 | 5 | | 27 | N/A | N/A | | 1 | 5 | | N/A | N/A | |
| | SOUTHEAST | 2 | | 6 | 30 | N/A | N/A | 2 | | 6 | 30 | 53 | N/A | N/A | | 2 | 6 | | N/A | N/A | |
| | SOUTHWEST | 3 | | 7 | 23 | 29 | C | 3 | | 7 | 23 | 27 | 28 | C | | 3 | 7 | | 28 | C | |
| | NORTHWEST | 4 | | 8 | 23 | 31 | C | 4 | | 8 | 23 | 53 | 31 | C | | 4 | 8 | | 31 | C | |
| ***Blvd @ 33rd St*** | NORTHEAST | 1 | | 5 | | N/A | N/A | 1 | 10 | 5 | | 30 | 113 | B | | 1 | 5 | | 113 | B | |
| | SOUTHEAST | 2 | | 6 | | N/A | N/A | 2 | 13 | 6 | | 50 | N/A | N/A | | 2 | 6 | | N/A | N/A | |
| | SOUTHWEST | 3 | | 7 | | N/A | N/A | 3 | 13 | 7 | 13 | 30 | N/A | N/A | | 3 | 7 | | N/A | N/A | |
| | NORTHWEST | 4 | | 8 | | N/A | N/A | 4 | 13 | 8 | 13 | 50 | 65 | B | | 4 | 8 | | 65 | B | |
| ***Blvd @ 34th St*** | NORTHEAST | 1 | | 5 | | N/A | N/A | 1 | 18 | 5 | 13 | 30 | 79 | B | | 1 | 5 | | 79 | B | |
| | SOUTHEAST | 2 | | 6 | | N/A | N/A | 2 | 13 | 6 | 13 | 50 | 62 | B | | 2 | 6 | | 62 | B | |
| | SOUTHWEST | 3 | | 7 | | N/A | N/A | 3 | 20 | 7 | 20 | 30 | 29 | C | | 3 | 7 | | 29 | C | |
| | NORTHWEST | 4 | | 8 | | N/A | N/A | 4 | 20 | 8 | 30 | 50 | 94 | B | | 4 | 8 | | 94 | B | |

# Appendix S.5.4

**Pedestrian Improvement Analysis - Corner Level of Service**

**2010 Future Conditions (EVE)**

| Intersection | Corner Location | 2010 Future without the Proposed Action | | | | | 2010 Future with the Proposed Action | | | | | | | 2010 Future with the Proposed Action (Improvement) | | | | | |
|---|---|---|---|---|---|---|---|---|---|---|---|---|---|---|---|---|---|---|---|
| | | Sidewalk Width for No Build Condition | | | | Pedestrian Flow Rate (s.f./ped.) | Level of Service | Sidewalk Width for Build Condition | | Pedestrian Green | Pedestrian Flow Rate (s.f./ped.) | Level of Service | Impact? | Proposed Sidewalk Width Improvement | | Signal Timing | Pedestrian Flow Rate (s.f./ped.) | Level of Service | Still Impact? |
| ***Twelfth Ave @ 30th St*** | NORTHEAST | 1 | 15 | 5 | 15 | 2665 | A | 1 15 | 5 15 | 24 | 2665 | A | | 1 | 5 | | 8715 | A | |
| | SOUTHEAST | 2 | 11 | 6 | 15 | 7116 | A | 2 11 | 6 15 | 70 | 7116 | A | | 2 | 6 | | 5083 | A | |
| | SOUTHWEST | 3 | 13 | 7 | | N/A | N/A | 3 13 | 7 | 24 | N/A | N/A | | 3 35 | 7 | | N/A | N/A | |
| | NORTHWEST | 4 | 13 | 8 | | N/A | N/A | 4 13 | 8 | 70 | N/A | N/A | | 4 | 8 | | N/A | N/A | |
| ***Twelfth Ave @ 34th St*** | NORTHEAST | 1 | 15 | 5 | 12 | 5942 | A | 1 15 | 5 12 | 29 | 50 | B | | 1 | 5 | | 50 | B | |
| | SOUTHEAST | 2 | 12 | 6 | 15 | 8306 | A | 2 12 | 6 15 | 60 | 25 | C | | 2 | 6 | | 68 | B | |
| | SOUTHWEST | 3 | 18 | 7 | | N/A | N/A | 3 18 | 7 | 29 | N/A | N/A | | 3 | 7 | | N/A | N/A | |
| | NORTHWEST | 4 | 18 | 8 | | N/A | N/A | 4 18 | 8 | 60 | N/A | N/A | | 4 | 8 | | N/A | N/A | |
| ***Eleventh Ave @ 30th St*** | NORTHEAST | 1 | 15 | 5 | 15 | 3660 | A | 1 15 | 5 15 | 40 | 22 | D | | 1 | 5 | | 59 | B | |
| | SOUTHEAST | 2 | 15 | 6 | 15 | 4706 | A | 2 15 | 6 15 | 40 | 281 | A | | 2 | 6 | | 281 | A | |
| | SOUTHWEST | 3 | 13 | 7 | 13 | 5490 | A | 3 13 | 7 13 | 40 | 107 | B | | 3 35 | 7 | | 107 | B | |
| | NORTHWEST | 4 | 13 | 8 | 13 | 6588 | A | 4 13 | 8 13 | 40 | 32 | C | | 4 | 8 35 | | 68 | B | |
| ***Eleventh Ave @ 33rd St*** | NORTHEAST | 1 | 15 | 5 | 15 | 1569 | A | 1 15 | 5 15 | 25 | 18 | D | | 1 | 5 | | 40 | B | |
| | SOUTHEAST | 2 | 15 | 6 | 15 | 4114 | A | 2 15 | 6 15 | 55 | -18 | F | Yes | 2 | 6 | | 15 | D | |
| | SOUTHWEST | 3 | 13 | 7 | 13 | 6596 | A | 3 13 | 7 | 25 | N/A | N/A | | 3 | 7 | | N/A | N/A | |
| | NORTHWEST | 4 | 13 | 8 | 13 | 8231 | A | 4 13 | 8 | 55 | N/A | N/A | | 4 35 | 8 | | N/A | N/A | |
| ***Eleventh Ave @ 34th St*** | NORTHEAST | 1 | 15 | 5 | 15 | 1950 | A | 1 15 | 5 15 | 22 | 139 | A | | 1 | 5 | 30 | 137 | A | |
| | SOUTHEAST | 2 | 12 | 6 | 15 | 1101 | A | 2 17 | 6 15 | 58 | 13 | E | Yes | 2 | 6 | 30 | 30 | C | |
| | SOUTHWEST | 3 | 20 | 7 | 20 | 2578 | A | 3 30 | 7 20 | 22 | 15 | D | | 3 | 7 | 30 | 25 | C | |
| | NORTHWEST | 4 | 20 | 8 | 20 | 3230 | A | 4 20 | 8 20 | 58 | 47 | B | | 4 | 8 | 30 | 36 | C | |
| ***Eleventh Ave @ 39th St*** | NORTHEAST | 1 | 14 | 5 | 10 | 3018 | A | 1 14 | 5 10 | 31 | 70 | B | | 1 | 5 | | 70 | B | |
| | SOUTHEAST | 2 | 10 | 6 | 15 | 1256 | A | 2 10 | 6 15 | 49 | 44 | B | | 2 | 6 | | 44 | B | |
| | SOUTHWEST | 3 | 12 | 7 | 13 | 1780 | A | 3 12 | 7 | 31 | N/A | N/A | | 3 | 7 | | N/A | N/A | |
| | NORTHWEST | 4 | 11 | 8 | 15 | 1546 | A | 4 11 | 8 | 49 | N/A | N/A | | 4 | 8 | | N/A | N/A | |
| ***Eleventh Ave @ 42nd St*** | NORTHEAST | 1 | 16 | 5 | 16 | 400 | A | 1 16 | 5 16 | 33 | 182 | A | | 1 | 5 | | 182 | A | |
| | SOUTHEAST | 2 | 16 | 6 | 15 | 463 | A | 2 16 | 6 15 | 35 | 199 | A | | 2 | 6 | | 199 | A | |
| | SOUTHWEST | 3 | 15 | 7 | 16 | 546 | A | 3 15 | 7 16 | 33 | 435 | A | | 3 | 7 | | 435 | A | |
| | NORTHWEST | 4 | 15 | 8 | 16 | 505 | A | 4 15 | 8 16 | 35 | 366 | A | | 4 | 8 | | 366 | A | |
| ***Tenth Ave @ 30th St*** | NORTHEAST | 1 | 16 | 5 | 15 | 1613 | A | 1 16 | 5 15 | 30 | 5 | F | Yes | 1 | 5 | 24 | 84 | B | |
| | SOUTHEAST | 2 | 15 | 6 | 15 | 1582 | A | 2 15 | 6 15 | 50 | 222 | A | | 2 | 6 | 56 | 224 | A | |
| | SOUTHWEST | 3 | 13 | 7 | 14 | 1211 | A | 3 13 | 7 14 | 30 | 1083 | A | | 3 | 7 | 24 | 1083 | A | |
| | NORTHWEST | 4 | 15 | 8 | 14 | 1355 | A | 4 15 | 8 14 | 50 | 13 | E | Yes | 4 | 8 36 | 56 | 90 | B | |
| ***Tenth Ave @ 31st St*** | NORTHEAST | 1 | 15 | 5 | 15 | 2429 | A | 1 15 | 5 15 | 30 | -6 | F | Yes | 1 | 5 | | -3 | F | Yes |
| | SOUTHEAST | 2 | 15 | 6 | 15 | 2107 | A | 2 15 | 6 15 | 50 | 30 | C | | 2 | 6 | 30 | 14 | E | Yes |
| | SOUTHWEST | 3 | 13 | 7 | | N/A | N/A | 3 13 | 7 | 30 | N/A | N/A | | 3 | 7 | | N/A | N/A | |
| | NORTHWEST | 4 | 13 | 8 | | N/A | N/A | 4 13 | 8 | 50 | N/A | N/A | | 4 | 8 | 30 | N/A | N/A | |
| ***Tenth Ave @ 33rd St*** | NORTHEAST | 1 | 15 | 5 | 15 | 891 | A | 1 15 | 5 15 | 32 | 20 | D | | 1 | 5 | | 41 | B | |
| | SOUTHEAST | 2 | 15 | 6 | 15 | 897 | A | 2 15 | 6 15 | 48 | -2 | F | Yes | 2 | 6 | | 4 | F | Yes |
| | SOUTHWEST | 3 | 13 | 7 | 13 | 1360 | A | 3 13 | 7 13 | 32 | 14 | E | Yes | 3 | 7 35 | | 26 | C | |
| | NORTHWEST | 4 | 13 | 8 | 13 | 1496 | A | 4 13 | 8 13 | 48 | 45 | B | | 4 35 | 8 | | 66 | B | |
| ***Tenth Ave @ 34th St*** | NORTHEAST | 1 | 15 | 5 | 15 | 733 | A | 1 15 | 5 15 | 30 | 119 | B | | 1 | 5 | | 156 | A | |
| | SOUTHEAST | 2 | 15 | 6 | 15 | 474 | A | 2 15 | 6 15 | 50 | 45 | B | | 2 | 6 | 30 | 79 | B | |
| | SOUTHWEST | 3 | 20 | 7 | 20 | 647 | A | 3 20 | 7 20 | 30 | 69 | B | | 3 | 7 | | 105 | B | |
| | NORTHWEST | 4 | 20 | 8 | 20 | 1016 | A | 4 20 | 8 20 | 50 | 123 | B | | 4 | 8 | 30 | 151 | A | |
| ***Ninth Ave @ 30th St*** | NORTHEAST | 1 | 16 | 5 | 16 | 453 | A | 1 16 | 5 16 | 36 | 58 | B | | 1 | 5 | | 338 | A | |
| | SOUTHEAST | 2 | 15 | 6 | 16 | 506 | A | 2 15 | 6 16 | 44 | 269 | A | | 2 | 6 | | 269 | A | |
| | SOUTHWEST | 3 | 13 | 7 | 14 | 650 | A | 3 13 | 7 14 | 36 | 195 | A | | 3 | 7 | | 195 | A | |
| | NORTHWEST | 4 | 13 | 8 | 12 | 653 | A | 4 13 | 8 12 | 44 | 74 | B | | 4 | 8 | | 371 | A | |

# Appendix S.5.4

**Pedestrian Improvement Analysis - Corner Level of Service**

**2010 Future Conditions (EVE)**

| Intersection | Corner Location | 2010 Future without the Proposed Action | | | | | 2010 Future with the Proposed Action | | | | | | | 2010 Future with the Proposed Action (Improvement) | | | | | |
|---|---|---|---|---|---|---|---|---|---|---|---|---|---|---|---|---|---|---|---|
| | | Sidewalk Width for No Build Condition | | | | Pedestrian Flow Rate (s.f./ped.) | Level of Service | Sidewalk Width for Build Condition | | Pedestrian Green | Pedestrian Flow Rate (s.f./ped.) | Level of Service | Impact? | Proposed Sidewalk Width Improvement | | Signal Timing | Pedestrian Flow Rate (s.f./ped.) | Level of Service | Still Impact? |
| ***Ninth Ave @ 31st St*** | NORTHEAST | 1 | 15 | 5 | 15 | 452 | A | 1 15 | 5 15 | 30 | -10 | F | Yes | 1 | 5 | | 8 | E | Yes |
| | SOUTHEAST | 2 | 13 | 6 | 15 | 403 | A | 2 13 | 6 15 | 50 | 11 | E | Yes | 2 | 6 | | 281 | A | |
| | SOUTHWEST | 3 | 13 | 7 | 13 | 726 | A | 3 13 | 7 13 | 30 | 29 | C | | 3 | 7 | | 83 | B | |
| | NORTHWEST | 4 | 13 | 8 | 13 | 816 | A | 4 13 | 8 13 | 50 | 13 | E | Yes | 4 | 8 | | 25 | C | |
| ***Ninth Ave @ 33rd St*** | NORTHEAST | 1 | 15 | 5 | 15 | 285 | A | 1 15 | 5 15 | 30 | 21 | D | | 1 | 5 | | 27 | C | |
| | SOUTHEAST | 2 | 15 | 6 | 15 | 236 | A | 2 15 | 6 15 | 50 | -8 | F | Yes | 2 | 6 | | -3 | F | Yes |
| | SOUTHWEST | 3 | 13 | 7 | 13 | 396 | A | 3 13 | 7 13 | 30 | 13 | E | Yes | 3 | 7 | 35 | 21 | D | |
| | NORTHWEST | 4 | 13 | 8 | 13 | 667 | A | 4 13 | 8 13 | 50 | 40 | B | | 4 35 | 8 | | 42 | B | |
| ***Ninth Ave @ 34th St*** | NORTHEAST | 1 | 15 | 5 | 15 | 259 | A | 1 15 | 5 15 | 25 | 70 | B | | 1 | 5 | 30 | 91 | B | |
| | SOUTHEAST | 2 | 15 | 6 | 15 | 255 | A | 2 15 | 6 15 | 40 | 44 | B | | 2 | 6 | 30 | 87 | B | |
| | SOUTHWEST | 3 | 23 | 7 | 20 | 337 | A | 3 23 | 7 20 | 25 | 58 | B | | 3 | 7 | 30 | 97 | B | |
| | NORTHWEST | 4 | 23 | 8 | 20 | 333 | A | 4 23 | 8 20 | 40 | 73 | B | | 4 | 8 | 30 | 91 | B | |
| ***Eighth Ave @ 30th St*** | NORTHEAST | 1 | 14 | 5 | 15 | 201 | A | 1 14 | 5 15 | 38 | 112 | B | | 1 | 5 | 39 | 179 | A | |
| | SOUTHEAST | 2 | 15 | 6 | 14 | 297 | A | 2 15 | 6 14 | 42 | 297 | A | | 2 | 6 | 41 | 297 | A | |
| | SOUTHWEST | 3 | 13 | 7 | 14 | 265 | A | 3 13 | 7 14 | 38 | 265 | A | | 3 | 7 | 39 | 265 | A | |
| | NORTHWEST | 4 | 14 | 8 | 13 | 228 | A | 4 14 | 8 13 | 42 | 94 | B | | 4 | 8 | 41 | 202 | A | |
| ***Eighth Ave @ 31st St*** | NORTHEAST | 1 | 16 | 5 | 15 | 559 | A | 1 16 | 5 15 | 40 | 129 | B | | 1 | 5 | | 297 | A | |
| | SOUTHEAST | 2 | 24 | 6 | 15 | 126 | B | 2 24 | 6 15 | 40 | 31 | C | | 2 | 6 | | 115 | B | |
| | SOUTHWEST | 3 | 49 | 7 | 13 | 115 | B | 3 49 | 7 13 | 40 | 39 | C | | 3 | 7 | | 107 | B | |
| | NORTHWEST | 4 | 14 | 8 | 24 | 241 | A | 4 14 | 8 24 | 40 | 43 | B | | 4 | 8 | | 105 | B | |
| ***Eighth Ave @ 33rd St*** | NORTHEAST | 1 | 15 | 5 | 43 | 84 | B | 1 15 | 5 43 | 47 | 52 | B | | 1 | 5 | 30 | 49 | B | |
| | SOUTHEAST | 2 | 19 | 6 | 16 | 507 | A | 2 19 | 6 16 | 33 | 177 | A | | 2 | 6 | 30 | 141 | A | |
| | SOUTHWEST | 3 | 17 | 7 | 24 | 64 | B | 3 17 | 7 24 | 47 | 27 | C | | 3 | 7 46 | 30 | 50 | B | |
| | NORTHWEST | 4 | 43 | 8 | 14 | 39 | C | 4 43 | 8 14 | 33 | 26 | C | | 4 | 8 | 30 | 24 | C | |
| ***Eighth Ave @ 34th St*** | NORTHEAST | 1 | 15 | 5 | 15 | 26 | C | 1 15 | 5 15 | 40 | 23 | D | | 1 | 5 | 30 | 23 | D | |
| | SOUTHEAST | 2 | 15 | 6 | 15 | 19 | D | 2 15 | 6 15 | 40 | 12 | E | Yes | 2 | 6 | 30 | 12 | E | Yes |
| | SOUTHWEST | 3 | 22 | 7 | 22 | 25 | C | 3 22 | 7 22 | 40 | 20 | D | | 3 | 7 | 30 | 20 | D | |
| | NORTHWEST | 4 | 22 | 8 | 22 | 104 | B | 4 22 | 8 22 | 40 | 80 | B | | 4 | 8 | 30 | 84 | B | |
| ***Sixth Ave @ 34th St*** | NORTHEAST | 1 | | 5 | 17 | 78 | B | 1 | 5 17 | 27 | 78 | B | | 1 | 5 | | 78 | B | |
| | SOUTHEAST | 2 | 17 | 6 | | 72 | B | 2 17 | 6 | 53 | 72 | B | | 2 | 6 | | 72 | B | |
| | SOUTHWEST | 3 | 23 | 7 | | N/A | N/A | 3 23 | 7 | 27 | N/A | N/A | | 3 | 7 | | N/A | N/A | |
| | NORTHWEST | 4 | 23 | 8 | | N/A | N/A | 4 23 | 8 | 53 | N/A | N/A | | 4 | 8 | | N/A | N/A | |
| ***Broadway @ 34th St*** | NORTHEAST | 1 | 30 | 5 | | N/A | N/A | 1 30 | 5 | 27 | N/A | N/A | | 1 | 5 | | N/A | N/A | |
| | SOUTHEAST | 2 | | 6 | 30 | N/A | N/A | 2 | 6 30 | 53 | N/A | N/A | | 2 | 6 | | N/A | N/A | |
| | SOUTHWEST | 3 | | 7 | 23 | 120 | B | 3 | 7 23 | 27 | 120 | B | | 3 | 7 | | 120 | B | |
| | NORTHWEST | 4 | | 8 | 23 | 131 | A | 4 | 8 23 | 53 | 129 | B | | 4 | 8 | | 130 | A | |
| ***Blvd @ 33rd St*** | NORTHEAST | | | | | N/A | N/A | 1 10 | 5 | 45 | 17 | D | | 1 | 5 | | 37 | C | |
| | SOUTHEAST | | | | | N/A | N/A | 2 13 | 6 | 45 | N/A | N/A | | 2 | 6 | | N/A | N/A | |
| | SOUTHWEST | | | | | N/A | N/A | 3 13 | 7 13 | 45 | N/A | N/A | | 3 | 7 35 | | N/A | N/A | |
| | NORTHWEST | | | | | N/A | N/A | 4 13 | 8 13 | 45 | 19 | D | | 4 35 | 8 | | 14 | E | |
| ***Blvd @ 34th St*** | NORTHEAST | | | | | N/A | N/A | 1 18 | 5 13 | 30 | 165 | A | | 1 | 5 | | 215 | A | |
| | SOUTHEAST | | | | | N/A | N/A | 2 13 | 6 13 | 32 | 72 | B | | 2 | 6 | | 130 | A | |
| | SOUTHWEST | | | | | N/A | N/A | 3 20 | 7 20 | 30 | 95 | B | | 3 | 7 | | 144 | A | |
| | NORTHWEST | | | | | N/A | N/A | 4 20 | 8 30 | 32 | 431 | A | | 4 | 8 | | 537 | A | |

# Appendix S.5.4

**Pedestrian Improvement Analysis - Corner Level of Service**

**2010 Future Conditions (SUN)**

| Intersection | Corner Location | 2010 Future without the Proposed Action | | | | | 2010 Future with the Proposed Action | | | | | | | 2010 Future with the Proposed Action (Improvement) | | | | | |
|---|---|---|---|---|---|---|---|---|---|---|---|---|---|---|---|---|---|---|---|
| | | Sidewalk Width for No Build Condition | | | | Pedestrian Flow Rate (s.f./ped.) | Level of Service | Sidewalk Width for Build Condition | | Pedestrian Green | Pedestrian Flow Rate (s.f./ped.) | Level of Service | Impact? | Proposed Sidewalk Width Improvement | | Signal Timing | Pedestrian Flow Rate (s.f./ped.) | Level of Service | Still Impact? |
| ***Twelfth Ave @ 30th St*** | NORTHEAST | 1 | 15 | 5 | 15 | 3417 | A | 1 15 | 5 15 | 24 | 3417 | A | | 1 | 5 | | 11196 | A | |
| | SOUTHEAST | 2 | 11 | 6 | 15 | 4450 | A | 2 11 | 6 15 | 70 | 4450 | A | | 2 | 6 | | 4450 | A | |
| | SOUTHWEST | 3 | 13 | 7 | | N/A | N/A | 3 13 | 7 | 24 | N/A | N/A | | 3 35 | 7 | | N/A | N/A | |
| | NORTHWEST | 4 | 13 | 8 | | N/A | N/A | 4 13 | 8 | 70 | N/A | N/A | | 4 | 8 | | N/A | N/A | |
| ***Twelfth Ave @ 34th St*** | NORTHEAST | 1 | 15 | 5 | 12 | 4160 | A | 1 15 | 5 12 | 29 | 68 | B | | 1 | 5 | | 68 | B | |
| | SOUTHEAST | 2 | 12 | 6 | 15 | 304 | A | 2 12 | 6 15 | 60 | -10 | F | Yes | 2 | 6 | | 38 | C | |
| | SOUTHWEST | 3 | 18 | 7 | | N/A | N/A | 3 18 | 7 | 29 | N/A | N/A | | 3 | 7 | | N/A | N/A | |
| | NORTHWEST | 4 | 18 | 8 | | N/A | N/A | 4 18 | 8 | 60 | N/A | N/A | | 4 | 8 | | N/A | N/A | |
| ***Eleventh Ave @ 30th St*** | NORTHEAST | 1 | 15 | 5 | 15 | 680 | A | 1 15 | 5 15 | 40 | 26 | C | | 1 | 5 | | 59 | B | |
| | SOUTHEAST | 2 | 15 | 6 | 15 | 1262 | A | 2 15 | 6 15 | 40 | 117 | B | | 2 | 6 | | 28 | C | |
| | SOUTHWEST | 3 | 13 | 7 | 13 | 1641 | A | 3 13 | 7 13 | 40 | 35 | C | | 3 35 | 7 | | 35 | C | |
| | NORTHWEST | 4 | 13 | 8 | 13 | 859 | A | 4 13 | 8 13 | 40 | 1 | F | Yes | 4 | 8 35 | | 43 | B | |
| ***Eleventh Ave @ 33rd St*** | NORTHEAST | 1 | 15 | 5 | 15 | 400 | A | 1 15 | 5 15 | 25 | 22 | D | | 1 | 5 | | 24 | C | |
| | SOUTHEAST | 2 | 15 | 6 | 15 | 1027 | A | 2 15 | 6 15 | 55 | 11 | E | Yes | 2 | 6 | | 46 | B | |
| | SOUTHWEST | 3 | 13 | 7 | 13 | 6591 | A | 3 13 | 7 | 25 | N/A | N/A | | 3 | 7 | | N/A | N/A | |
| | NORTHWEST | 4 | 13 | 8 | 13 | 5486 | A | 4 13 | 8 | 55 | N/A | N/A | | 4 35 | 8 | | N/A | N/A | |
| ***Eleventh Ave @ 34th St*** | NORTHEAST | 1 | 15 | 5 | 15 | 255 | A | 1 15 | 5 15 | 22 | 62 | B | | 1 | 5 | 30 | 62 | B | |
| | SOUTHEAST | 2 | 12 | 6 | 15 | 346 | A | 2 17 | 6 15 | 58 | 19 | D | | 2 | 6 | 30 | 13 | E | Yes |
| | SOUTHWEST | 3 | 20 | 7 | 20 | 364 | A | 3 30 | 7 20 | 22 | 3 | F | Yes | 3 | 7 | 30 | 1 | F | Yes |
| | NORTHWEST | 4 | 20 | 8 | 20 | 313 | A | 4 20 | 8 20 | 58 | 20 | D | | 4 | 8 | 30 | 21 | D | |
| ***Eleventh Ave @ 39th St*** | NORTHEAST | 1 | 14 | 5 | 10 | 1626 | A | 1 14 | 5 10 | 31 | 24 | C | | 1 | 5 | 50 | 13 | E | Yes |
| | SOUTHEAST | 2 | 10 | 6 | 15 | 160 | A | 2 10 | 6 15 | 49 | 20 | D | | 2 | 6 | 30 | 21 | D | |
| | SOUTHWEST | 3 | 12 | 7 | 13 | 286 | A | 3 12 | 7 | 31 | N/A | N/A | | 3 | 7 | 50 | N/A | N/A | |
| | NORTHWEST | 4 | 11 | 8 | 15 | 1378 | A | 4 11 | 8 | 49 | N/A | N/A | | 4 | 8 | 30 | N/A | N/A | |
| ***Eleventh Ave @ 42nd St*** | NORTHEAST | 1 | 16 | 5 | 16 | 177 | A | 1 16 | 5 16 | 33 | 85 | B | | 1 | 5 | 36 | 85 | B | |
| | SOUTHEAST | 2 | 16 | 6 | 15 | 184 | A | 2 16 | 6 15 | 35 | 86 | B | | 2 | 6 | 22 | 83 | B | |
| | SOUTHWEST | 3 | 15 | 7 | 16 | 177 | A | 3 15 | 7 16 | 33 | 93 | B | | 3 | 7 | 36 | 91 | B | |
| | NORTHWEST | 4 | 15 | 8 | 16 | 197 | A | 4 15 | 8 16 | 35 | 90 | B | | 4 | 8 | 22 | 90 | B | |
| ***Tenth Ave @ 30th St*** | NORTHEAST | 1 | 16 | 5 | 15 | 265 | A | 1 16 | 5 15 | 30 | 19 | D | | 1 | 5 | 28 | 40 | B | |
| | SOUTHEAST | 2 | 15 | 6 | 15 | 470 | A | 2 15 | 6 15 | 50 | 162 | A | | 2 | 6 | 52 | 227 | A | |
| | SOUTHWEST | 3 | 13 | 7 | 14 | 338 | A | 3 13 | 7 14 | 30 | 176 | A | | 3 | 7 | 28 | 175 | A | |
| | NORTHWEST | 4 | 15 | 8 | 14 | 239 | A | 4 15 | 8 14 | 50 | 0 | F | Yes | 4 | 8 36 | 52 | 51 | B | |
| ***Tenth Ave @ 31st St*** | NORTHEAST | 1 | 15 | 5 | 15 | 458 | A | 1 15 | 5 15 | 30 | 16 | D | | 1 | 5 | | 20 | D | |
| | SOUTHEAST | 2 | 15 | 6 | 15 | 554 | A | 2 15 | 6 15 | 50 | 43 | B | | 2 | 6 | 30 | 18 | D | |
| | SOUTHWEST | 3 | 13 | 7 | | N/A | N/A | 3 13 | 7 | 30 | N/A | N/A | | 3 | 7 | | N/A | N/A | |
| | NORTHWEST | 4 | 13 | 8 | | N/A | N/A | 4 13 | 8 | 50 | N/A | N/A | | 4 | 8 | 30 | N/A | N/A | |
| ***Tenth Ave @ 33rd St*** | NORTHEAST | 1 | 15 | 5 | 15 | 349 | A | 1 15 | 5 15 | 32 | 31 | C | | 1 | 5 | | 42 | B | |
| | SOUTHEAST | 2 | 15 | 6 | 15 | 272 | A | 2 15 | 6 15 | 48 | 19 | D | | 2 | 6 | | 21 | D | |
| | SOUTHWEST | 3 | 13 | 7 | 13 | 237 | A | 3 13 | 7 13 | 32 | -2 | F | Yes | 3 | 7 35 | | 5 | F | Yes |
| | NORTHWEST | 4 | 13 | 8 | 13 | 314 | A | 4 13 | 8 13 | 48 | 15 | D | | 4 35 | 8 | | 24 | C | |
| ***Tenth Ave @ 34th St*** | NORTHEAST | 1 | 15 | 5 | 15 | 344 | A | 1 15 | 5 15 | 30 | 109 | B | | 1 | 5 | 43 | 130 | A | |
| | SOUTHEAST | 2 | 15 | 6 | 15 | 371 | A | 2 15 | 6 15 | 50 | 63 | B | | 2 | 6 | 37 | 99 | B | |
| | SOUTHWEST | 3 | 20 | 7 | 20 | 415 | A | 3 20 | 7 20 | 30 | 52 | B | | 3 | 7 | 43 | 89 | B | |
| | NORTHWEST | 4 | 20 | 8 | 20 | 360 | A | 4 20 | 8 20 | 50 | 75 | B | | 4 | 8 | 37 | 89 | B | |
| ***Ninth Ave @ 30th St*** | NORTHEAST | 1 | 16 | 5 | 16 | 123 | B | 1 16 | 5 16 | 36 | 27 | C | | 1 | 5 | 30 | 36 | C | |
| | SOUTHEAST | 2 | 15 | 6 | 16 | 131 | A | 2 15 | 6 16 | 44 | 73 | B | | 2 | 6 | 30 | 85 | B | |
| | SOUTHWEST | 3 | 13 | 7 | 14 | 103 | B | 3 13 | 7 14 | 36 | 66 | B | | 3 | 7 | 30 | 65 | B | |
| | NORTHWEST | 4 | 13 | 8 | 12 | 133 | A | 4 13 | 8 12 | 44 | 15 | D | | 4 | 8 | 30 | 25 | C | |

# Appendix S.5.4

**Pedestrian Improvement Analysis - Corner Level of Service**

**2010 Future Conditions (SUN)**

| Intersection | Corner Location | 2010 Future without the Proposed Action | | | | | 2010 Future with the Proposed Action | | | | | | | 2010 Future with the Proposed Action (Improvement) | | | | | |
|---|---|---|---|---|---|---|---|---|---|---|---|---|---|---|---|---|---|---|---|
| | | | Sidewalk Width for No Build Condition | | | Pedestrian Flow Rate (s.f./ped.) | Level of Service | | Sidewalk Width for Build Condition | | Pedestrian Green | Pedestrian Flow Rate (s.f./ped.) | Level of Service | Impact? | Proposed Sidewalk Width Improvement | | Signal Timing | Pedestrian Flow Rate (s.f./ped.) | Level of Service | Still Impact? |
| ***Ninth Ave @ 31st St*** | NORTHEAST | 1 | 15 | 5 | 15 | 49 | B | 1 | 15 | 5 | 15 | 30 | 8 | E | Yes | 1 | 5 | | 17 | D | |
| | SOUTHEAST | 2 | 13 | 6 | 15 | 87 | B | 2 | 13 | 6 | 15 | 50 | 14 | E | Yes | 2 | 6 | | 60 | B | |
| | SOUTHWEST | 3 | 13 | 7 | 13 | 233 | A | 3 | 13 | 7 | 13 | 30 | 6 | E | Yes | 3 | 7 | | 46 | B | |
| | NORTHWEST | 4 | 13 | 8 | 13 | 143 | A | 4 | 13 | 8 | 13 | 50 | -7 | F | Yes | 4 | 8 | | 6 | E | Yes |
| ***Ninth Ave @ 33rd St*** | NORTHEAST | 1 | 15 | 5 | 15 | 69 | B | 1 | 15 | 5 | 15 | 30 | 25 | C | | 1 | 5 | | 28 | C | |
| | SOUTHEAST | 2 | 15 | 6 | 15 | 61 | B | 2 | 15 | 6 | 15 | 50 | 8 | E | Yes | 2 | 6 | | 18 | D | |
| | SOUTHWEST | 3 | 13 | 7 | 13 | 110 | B | 3 | 13 | 7 | 13 | 30 | -11 | F | Yes | 3 | 7 | 35 | -4 | F | Yes |
| | NORTHWEST | 4 | 13 | 8 | 13 | 187 | A | 4 | 13 | 8 | 13 | 50 | 18 | D | | 4 | 35 8 | | 21 | D | |
| ***Ninth Ave @ 34th St*** | NORTHEAST | 1 | 15 | 5 | 15 | 116 | B | 1 | 15 | 5 | 15 | 25 | 75 | B | | 1 | 5 | 30 | 85 | B | |
| | SOUTHEAST | 2 | 15 | 6 | 15 | 99 | B | 2 | 15 | 6 | 15 | 40 | 42 | B | | 2 | 6 | 30 | 58 | B | |
| | SOUTHWEST | 3 | 23 | 7 | 20 | 183 | A | 3 | 23 | 7 | 20 | 25 | 38 | C | | 3 | 7 | 30 | 78 | B | |
| | NORTHWEST | 4 | 23 | 8 | 20 | 189 | A | 4 | 23 | 8 | 20 | 40 | 77 | B | | 4 | 8 | 30 | 103 | B | |
| ***Eighth Ave @ 30th St*** | NORTHEAST | 1 | 14 | 5 | 15 | 150 | A | 1 | 14 | 5 | 15 | 38 | 48 | B | | 1 | 5 | | 56 | B | |
| | SOUTHEAST | 2 | 15 | 6 | 14 | 202 | A | 2 | 15 | 6 | 14 | 42 | 94 | B | | 2 | 6 | | 78 | B | |
| | SOUTHWEST | 3 | 13 | 7 | 14 | 172 | A | 3 | 13 | 7 | 14 | 38 | 76 | B | | 3 | 7 | | 89 | B | |
| | NORTHWEST | 4 | 14 | 8 | 13 | 136 | A | 4 | 14 | 8 | 13 | 42 | 36 | C | | 4 | 8 | | 54 | B | |
| ***Eighth Ave @ 31st St*** | NORTHEAST | 1 | 16 | 5 | 15 | 535 | A | 1 | 16 | 5 | 15 | 40 | 123 | B | | 1 | 5 | | 235 | A | |
| | SOUTHEAST | 2 | 24 | 6 | 15 | 102 | B | 2 | 24 | 6 | 15 | 40 | 20 | D | | 2 | 6 | | 45 | B | |
| | SOUTHWEST | 3 | 49 | 7 | 13 | 109 | B | 3 | 49 | 7 | 13 | 40 | 19 | D | | 3 | 7 | | 61 | B | |
| | NORTHWEST | 4 | 14 | 8 | 24 | 173 | A | 4 | 14 | 8 | 24 | 40 | 27 | C | | 4 | 8 | | 67 | B | |
| ***Eighth Ave @ 33rd St*** | NORTHEAST | 1 | 15 | 5 | 43 | 74 | B | 1 | 15 | 5 | 43 | 40 | 45 | B | | 1 | 5 | 30 | 43 | B | |
| | SOUTHEAST | 2 | 19 | 6 | 16 | 386 | A | 2 | 19 | 6 | 16 | 40 | 144 | A | | 2 | 6 | 30 | 129 | B | |
| | SOUTHWEST | 3 | 17 | 7 | 24 | 68 | B | 3 | 17 | 7 | 24 | 40 | 16 | D | | 3 | 7 46 | 30 | 32 | C | |
| | NORTHWEST | 4 | 43 | 8 | 14 | 39 | C | 4 | 43 | 8 | 14 | 40 | 23 | D | | 4 | 8 | 30 | 19 | D | |
| ***Eighth Ave @ 34th St*** | NORTHEAST | 1 | 15 | 5 | 15 | 74 | B | 1 | 15 | 5 | 15 | 40 | 54 | B | | 1 | 5 | 30 | 55 | B | |
| | SOUTHEAST | 2 | 15 | 6 | 15 | 69 | B | 2 | 15 | 6 | 15 | 40 | 34 | C | | 2 | 6 | 30 | 39 | C | |
| | SOUTHWEST | 3 | 22 | 7 | 22 | 58 | B | 3 | 22 | 7 | 22 | 40 | 29 | C | | 3 | 7 | 30 | 33 | C | |
| | NORTHWEST | 4 | 22 | 8 | 22 | 73 | B | 4 | 22 | 8 | 22 | 40 | 56 | B | | 4 | 8 | 30 | 56 | B | |
| ***Sixth Ave @ 34th St*** | NORTHEAST | 1 | | 5 | 17 | 37 | C | 1 | | 5 | 17 | 27 | 36 | C | | 1 | 5 | 28 | 36 | C | |
| | SOUTHEAST | 2 | 17 | 6 | | 38 | C | 2 | 17 | 6 | | 53 | 38 | C | | 2 | 6 | 52 | 38 | C | |
| | SOUTHWEST | 3 | 23 | 7 | | N/A | N/A | 3 | 23 | 7 | | 27 | N/A | N/A | | 3 | 7 | 28 | N/A | N/A | |
| | NORTHWEST | 4 | 23 | 8 | | N/A | N/A | 4 | 23 | 8 | | 53 | N/A | N/A | | 4 | 8 | 52 | N/A | N/A | |
| ***Broadway @ 34th St*** | NORTHEAST | 1 | 30 | 5 | | N/A | N/A | 1 | 30 | 5 | | 27 | N/A | N/A | | 1 | 5 | 28 | N/A | N/A | |
| | SOUTHEAST | 2 | | 6 | 30 | N/A | N/A | 2 | | 6 | 30 | 53 | N/A | N/A | | 2 | 6 | 52 | N/A | N/A | |
| | SOUTHWEST | 3 | | 7 | 23 | 101 | B | 3 | | 7 | 23 | 27 | 98 | B | | 3 | 7 | 28 | 98 | B | |
| | NORTHWEST | 4 | | 8 | 23 | 89 | B | 4 | | 8 | 23 | 53 | 86 | B | | 4 | 8 | 52 | 86 | B | |
| ***Blvd @ 33rd St*** | NORTHEAST | | | | | N/A | N/A | 1 | 10 | 5 | | 45 | 22 | D | | 1 | 5 | | 30 | C | |
| | SOUTHEAST | | | | | N/A | N/A | 2 | 13 | 6 | | 45 | N/A | N/A | | 2 | 6 | | N/A | N/A | |
| | SOUTHWEST | | | | | N/A | N/A | 3 | 13 | 7 | 13 | 45 | N/A | N/A | | 3 | 7 35 | | N/A | N/A | |
| | NORTHWEST | | | | | N/A | N/A | 4 | 13 | 8 | 13 | 45 | 6 | E | | 4 | 35 8 | | 7 | E | |
| ***Blvd @ 34th St*** | NORTHEAST | | | | | N/A | N/A | 1 | 18 | 5 | 13 | 30 | 110 | B | | 1 | 5 | | 122 | B | |
| | SOUTHEAST | | | | | N/A | N/A | 2 | 13 | 6 | 13 | 50 | 80 | B | | 2 | 6 | | 119 | B | |
| | SOUTHWEST | | | | | N/A | N/A | 3 | 20 | 7 | 20 | 30 | 68 | B | | 3 | 7 | | 104 | B | |
| | NORTHWEST | | | | | N/A | N/A | 4 | 20 | 8 | 30 | 50 | 233 | A | | 4 | 8 | | 259 | A | |

# Appendix S.5.4

**Pedestrian Improvement Analysis - Corner Level of Service**

**2025 Future Conditions (AM)**

| Intersection | Corner Location | 2025 Future without the Proposed Action | | | | | 2025 Future with the Proposed Action | | | | | | | 2025 Future with the Proposed Action (Improvement) | | | | | |
|---|---|---|---|---|---|---|---|---|---|---|---|---|---|---|---|---|---|---|---|
| | | Sidewalk Width for No Build Condition | | | | Pedestrian Flow Rate (s.f./ped.) | Level of Service | Sidewalk Width for Build Condition | | Pedestrian Green | Pedestrian Flow Rate (s.f./ped.) | Level of Service | Impact? | Proposed Sidewalk Width Improvement | | Signal Timing | Pedestrian Flow Rate (s.f./ped.) | Level of Service | Still Impact? |
| ***Twelfth Ave @ 30th St*** | NORTHEAST | 1 | | 5 | 15 | 11987 | A | 1 | 5 15 | 24 | 3996 | A | | 1 | 5 | | 5993 | A | |
| | SOUTHEAST | 2 | 11 | 6 | | 3557 | A | 2 11 | 6 | 95 | 2220 | A | | 2 | 6 | 94 | 2539 | A | |
| | SOUTHWEST | 3 | 13 | 7 | | N/A | N/A | 3 13 | 7 | 24 | N/A | N/A | | 3 | 7 | | N/A | N/A | |
| | NORTHWEST | 4 | 13 | 8 | | N/A | N/A | 4 13 | 8 | 95 | N/A | N/A | | 4 | 8 | 94 | N/A | N/A | |
| ***Twelfth Ave @ 34th St*** | NORTHEAST | 1 | | 5 | 12 | 8319 | A | 1 | 5 12 | 29 | 4155 | A | | 1 | 5 | 35 | 6930 | A | |
| | SOUTHEAST | 2 | 12 | 6 | | 736 | A | 2 12 | 6 | 80 | 663 | A | | 2 | 6 | 69 | 712 | A | |
| | SOUTHWEST | 3 | 18 | 7 | | N/A | N/A | 3 18 | 7 | 29 | N/A | N/A | | 3 | 7 | 35 | N/A | N/A | |
| | NORTHWEST | 4 | 18 | 8 | | N/A | N/A | 4 18 | 8 | 80 | N/A | N/A | | 4 | 8 | 69 | N/A | N/A | |
| ***Twelfth Ave @ 39th St*** | NORTHEAST | 1 | | 5 | 18 | 15502 | A | 1 | 5 18 | 30 | N/A | N/A | | 1 | 5 | 28 | N/A | N/A | |
| | SOUTHEAST | 2 | 13 | 6 | | 989 | A | 2 13 | 6 | 69 | N/A | N/A | | 2 | 6 | 98 | N/A | N/A | |
| | SOUTHWEST | 3 | 13 | 7 | | N/A | N/A | 3 | 7 | 30 | N/A | N/A | | 3 | 7 | 28 | N/A | N/A | |
| | NORTHWEST | 4 | 13 | 8 | | N/A | N/A | 4 | 8 | 69 | N/A | N/A | | 4 | 8 | 98 | N/A | N/A | |
| ***Twelfth Ave @ 40th St*** | NORTHEAST | 1 | | 5 | 14 | 6297 | A | 1 | 5 14 | 0 | N/A | N/A | | 1 | 5 | | N/A | N/A | |
| | SOUTHEAST | 2 | 13 | 6 | | 5473 | A | 2 13 | 6 | 71 | N/A | N/A | | 2 | 6 | | N/A | N/A | |
| | SOUTHWEST | 3 | 11 | 7 | | N/A | N/A | 3 | 7 | 0 | N/A | N/A | | 3 | 7 | | N/A | N/A | |
| | NORTHWEST | 4 | 12 | 8 | | N/A | N/A | 4 | 8 | 71 | N/A | N/A | | 4 | 8 | | N/A | N/A | |
| ***Twelfth Ave @ 42nd St*** | NORTHEAST | 1 | | 5 | 20 | 747 | A | 1 | 5 20 | 33 | 765 | A | | 1 | 5 | | 765 | A | |
| | SOUTHEAST | 2 | 20 | 6 | | 1406 | A | 2 20 | 6 | 69 | 1287 | A | | 2 | 6 | 66 | 1287 | A | |
| | SOUTHWEST | 3 | 15 | 7 | | N/A | N/A | 3 15 | 7 | 33 | N/A | N/A | | 3 | 7 | | N/A | N/A | |
| | NORTHWEST | 4 | 26 | 8 | | N/A | N/A | 4 26 | 8 | 0 | N/A | N/A | | 4 | 8 | | N/A | N/A | |
| ***Eleventh Ave @ 29th St*** | NORTHEAST | 1 | 15 | 5 | 15 | 1493 | A | 1 15 | 5 15 | 40 | 185 | A | | 1 | 5 | | 185 | A | |
| | SOUTHEAST | 2 | 15 | 6 | 15 | 1309 | A | 2 15 | 6 15 | 40 | 215 | A | | 2 | 6 | | 215 | A | |
| | SOUTHWEST | 3 | 13 | 7 | 13 | 4117 | A | 3 13 | 7 13 | 40 | 337 | A | | 3 | 7 | | 337 | A | |
| | NORTHWEST | 4 | 13 | 8 | 13 | 3658 | A | 4 13 | 8 13 | 40 | 299 | A | | 4 | 8 | | 299 | A | |
| ***Eleventh Ave @ 30th St*** | NORTHEAST | 1 | 15 | 5 | 15 | 1733 | A | 1 15 | 5 15 | 40 | 173 | A | | 1 | 5 | | 173 | A | |
| | SOUTHEAST | 2 | 15 | 6 | 15 | 2739 | A | 2 20 | 6 15 | 40 | 126 | B | | 2 | 6 | | 126 | B | |
| | SOUTHWEST | 3 | 13 | 7 | 13 | 2531 | A | 3 13 | 7 13 | 40 | 210 | A | | 3 | 7 | | 210 | A | |
| | NORTHWEST | 4 | 13 | 8 | 13 | 1643 | A | 4 13 | 8 13 | 40 | 188 | A | | 4 | 8 | | 188 | A | |
| ***Eleventh Ave @ 33rd St*** | NORTHEAST | 1 | 15 | 5 | 15 | 969 | A | 1 15 | 5 20 | 25 | 252 | A | | 1 | 5 | | 252 | A | |
| | SOUTHEAST | 2 | 15 | 6 | 15 | 1642 | A | 2 20 | 6 15 | 55 | 156 | A | | 2 | 6 | | 156 | A | |
| | SOUTHWEST | 3 | 13 | 7 | 13 | 2194 | A | 3 18 | 7 | 25 | N/A | N/A | | 3 | 7 | | N/A | N/A | |
| | NORTHWEST | 4 | 13 | 8 | 13 | 2527 | A | 4 13 | 8 | 55 | N/A | N/A | | 4 | 8 | | N/A | N/A | |
| ***Eleventh Ave @ 34th St*** | NORTHEAST | 1 | 15 | 5 | 15 | 592 | A | 1 15 | 5 20 | 22 | 200 | A | | 1 | 5 | 28 | 198 | A | |
| | SOUTHEAST | 2 | 12 | 6 | 15 | 682 | A | 2 17 | 6 15 | 58 | 295 | A | | 2 | 6 | 39 | 292 | A | |
| | SOUTHWEST | 3 | 20 | 7 | 20 | 1006 | A | 3 30 | 7 20 | 22 | 152 | A | | 3 | 7 | 28 | 149 | A | |
| | NORTHWEST | 4 | 20 | 8 | 20 | 985 | A | 4 30 | 8 20 | 58 | 105 | B | | 4 | 8 | 39 | 105 | B | |
| ***Eleventh Ave @ 35th St*** | NORTHEAST | 1 | 19 | 5 | 11 | 2170 | A | 1 19 | 5 16 | 40 | 103 | B | | 1 | 5 | | 103 | B | |
| | SOUTHEAST | 2 | 15 | 6 | 15 | 1592 | A | 2 15 | 6 15 | 40 | 88 | B | | 2 | 6 | | 88 | B | |
| | SOUTHWEST | 3 | 14 | 7 | | N/A | N/A | 3 24 | 7 | 40 | N/A | N/A | | 3 | 7 | | N/A | N/A | |
| | NORTHWEST | 4 | 14 | 8 | | N/A | N/A | 4 19 | 8 | 40 | N/A | N/A | | 4 | 8 | | N/A | N/A | |
| ***Eleventh Ave @ 36th St*** | NORTHEAST | 1 | 15 | 5 | 15 | 1261 | A | 1 15 | 5 20 | 22 | 52 | B | | 1 | 5 | | 52 | B | |
| | SOUTHEAST | 2 | 9 | 6 | 17 | 1416 | A | 2 15 | 6 17 | 22 | 52 | B | | 2 | 6 | | 52 | B | |
| | SOUTHWEST | 3 | 13 | 7 | | N/A | N/A | 3 22 | 7 | 22 | N/A | N/A | | 3 | 7 | | N/A | N/A | |
| | NORTHWEST | 4 | 10 | 8 | | N/A | N/A | 4 18 | 8 | 0 | N/A | N/A | | 4 | 8 | | N/A | N/A | |

# Appendix S.5.4

**Pedestrian Improvement Analysis - Corner Level of Service**

**2025 Future Conditions (AM)**

| Intersection | Corner Location | 2025 Future without the Proposed Action | | | | | | 2025 Future with the Proposed Action | | | | | | | | 2025 Future with the Proposed Action (Improvement) | | | | | |
|---|---|---|---|---|---|---|---|---|---|---|---|---|---|---|---|---|---|---|---|---|---|
| | | Sidewalk Width for No Build Condition | | | | Pedestrian Flow Rate (s.f./ped.) | Level of Service | Sidewalk Width for Build Condition | | | | Pedestrian Green | Pedestrian Flow Rate (s.f./ped.) | Level of Service | Impact? | Proposed Sidewalk Width Improvement | | Signal Timing | Pedestrian Flow Rate (s.f./ped.) | Level of Service | Still Impact? |
| ***Eleventh Ave @ 37th St*** | NORTHEAST | 1 | 15 | 5 | 10 | 1067 | A | 1 | 15 | 5 | 15 | 22 | 91 | B | | 1 | 5 | 42 | 86 | B | |
| | SOUTHEAST | 2 | 10 | 6 | 15 | 1144 | A | 2 | 15 | 6 | 15 | 58 | 65 | B | | 2 | 6 | 38 | 60 | B | |
| | SOUTHWEST | 3 | 12 | 7 | | N/A | N/A | 3 | 22 | 7 | | 22 | N/A | N/A | | 3 | 7 | 42 | N/A | N/A | |
| | NORTHWEST | 4 | 12 | 8 | | N/A | N/A | 4 | 17 | 8 | | 0 | N/A | N/A | | 4 | 8 | 38 | N/A | N/A | |
| ***Eleventh Ave @ 38th St*** | NORTHEAST | 1 | 15 | 5 | 10 | 1967 | A | 1 | 15 | 5 | 15 | 22 | 297 | A | | 1 | 5 | 17 | 294 | A | |
| | SOUTHEAST | 2 | 10 | 6 | 15 | 1972 | A | 2 | 15 | 6 | 15 | 22 | 192 | A | | 2 | 6 | 17 | 190 | A | |
| | SOUTHWEST | 3 | 11 | 7 | | N/A | N/A | 3 | 22 | 7 | | 22 | N/A | N/A | | 3 | 7 | 17 | N/A | N/A | |
| | NORTHWEST | 4 | 11 | 8 | | N/A | N/A | 4 | 17 | 8 | | 22 | N/A | N/A | | 4 | 8 | 17 | N/A | N/A | |
| ***Eleventh Ave @ 39th St*** | NORTHEAST | 1 | 14 | 5 | 10 | 2110 | A | 1 | 14 | 5 | 15 | 31 | 138 | A | | 1 | 5 | 40 | 135 | A | |
| | SOUTHEAST | 2 | 10 | 6 | 15 | 529 | A | 2 | 15 | 6 | 15 | 49 | 159 | A | | 2 | 6 | 40 | 158 | A | |
| | SOUTHWEST | 3 | 12 | 7 | 13 | 318 | A | 3 | 12 | 7 | | 31 | N/A | N/A | | 3 | 7 | 40 | N/A | N/A | |
| | NORTHWEST | 4 | 11 | 8 | 15 | 446 | A | 4 | 18 | 8 | | 49 | N/A | N/A | | 4 | 8 | 40 | N/A | N/A | |
| ***Eleventh Ave @ 40th St*** | NORTHEAST | 1 | 15 | 5 | 10 | 872 | A | 1 | 15 | 5 | 15 | 22 | 165 | A | | 1 | 5 | | 165 | A | |
| | SOUTHEAST | 2 | 10 | 6 | 15 | 963 | A | 2 | 15 | 6 | 15 | 22 | 253 | A | | 2 | 6 | | 253 | A | |
| | SOUTHWEST | 3 | 13 | 7 | 13 | 968 | A | 3 | 18 | 7 | | 22 | N/A | N/A | | 3 | 7 | | N/A | N/A | |
| | NORTHWEST | 4 | 13 | 8 | 13 | 783 | A | 4 | 18 | 8 | | 22 | N/A | N/A | | 4 | 8 | | N/A | N/A | |
| ***Eleventh Ave @ 42nd St*** | NORTHEAST | 1 | 16 | 5 | 16 | 223 | A | 1 | 16 | 5 | 16 | 33 | 99 | B | | 1 | 5 | 39 | 97 | B | |
| | SOUTHEAST | 2 | 16 | 6 | 15 | 267 | A | 2 | 16 | 6 | 15 | 35 | 66 | B | | 2 | 6 | 29 | 67 | B | |
| | SOUTHWEST | 3 | 15 | 7 | 16 | 210 | A | 3 | 15 | 7 | 16 | 33 | 82 | B | | 3 | 7 | 39 | 83 | B | |
| | NORTHWEST | 4 | 15 | 8 | 16 | 198 | A | 4 | 15 | 8 | 16 | 35 | 139 | A | | 4 | 8 | 29 | 139 | A | |
| ***Tenth Ave @ 29th St*** | NORTHEAST | 1 | 15 | 5 | 15 | 433 | A | 1 | 15 | 5 | 15 | 30 | 162 | A | | 1 | 5 | | 162 | A | |
| | SOUTHEAST | 2 | 15 | 6 | 15 | 348 | A | 2 | 15 | 6 | 15 | 50 | 154 | A | | 2 | 6 | | 154 | A | |
| | SOUTHWEST | 3 | 13 | 7 | 13 | 230 | A | 3 | 13 | 7 | 13 | 30 | 70 | B | | 3 | 7 | | 70 | B | |
| | NORTHWEST | 4 | 13 | 8 | 13 | 285 | A | 4 | 13 | 8 | 13 | 50 | 75 | B | | 4 | 8 | | 75 | B | |
| ***Tenth Ave @ 30th St*** | NORTHEAST | 1 | 16 | 5 | 15 | 496 | A | 1 | 16 | 5 | 15 | 30 | 79 | B | | 1 | 5 | | 79 | B | |
| | SOUTHEAST | 2 | 15 | 6 | 15 | 576 | A | 2 | 15 | 6 | 15 | 50 | 154 | A | | 2 | 6 | | 154 | A | |
| | SOUTHWEST | 3 | 13 | 7 | 14 | 472 | A | 3 | 13 | 7 | 14 | 30 | 72 | B | | 3 | 7 | | 72 | B | |
| | NORTHWEST | 4 | 15 | 8 | 14 | 452 | A | 4 | 15 | 8 | 14 | 50 | 55 | B | | 4 | 8 | | 55 | B | |
| ***Tenth Ave @ 31st St*** | NORTHEAST | 1 | 15 | 5 | 15 | 579 | A | 1 | 15 | 5 | 15 | 30 | 38 | C | | 1 | 5 | | 38 | C | |
| | SOUTHEAST | 2 | 15 | 6 | 15 | 698 | A | 2 | 15 | 6 | 15 | 50 | 118 | B | | 2 | 6 | | 118 | B | |
| | SOUTHWEST | 3 | 13 | 7 | | N/A | N/A | 3 | 13 | 7 | | 30 | N/A | N/A | | 3 | 7 | | N/A | N/A | |
| | NORTHWEST | 4 | 13 | 8 | | N/A | N/A | 4 | 13 | 8 | | 0 | N/A | N/A | | 4 | 8 | | N/A | N/A | |
| ***Tenth Ave @ 33rd St*** | NORTHEAST | 1 | 15 | 5 | 15 | 388 | A | 1 | 15 | 5 | 15 | 32 | 11 | E | Yes | 1 | 5 | | 11 | E | Yes |
| | SOUTHEAST | 2 | 15 | 6 | 15 | 332 | A | 2 | 15 | 6 | 15 | 48 | 7 | E | Yes | 2 | 6 | | 7 | E | Yes |
| | SOUTHWEST | 3 | 13 | 7 | 13 | 357 | A | 3 | 13 | 7 | 13 | 32 | 9 | E | Yes | 3 | 7 | | 9 | E | Yes |
| | NORTHWEST | 4 | 13 | 8 | 13 | 468 | A | 4 | 13 | 8 | 18 | 48 | 26 | C | | 4 | 8 | | 26 | C | |
| ***Tenth Ave @ 34th St*** | NORTHEAST | 1 | 15 | 5 | 15 | 266 | A | 1 | 15 | 5 | 15 | 30 | 27 | C | | 1 | 5 | 43 | 30 | C | |
| | SOUTHEAST | 2 | 15 | 6 | 15 | 279 | A | 2 | 15 | 6 | 15 | 50 | 19 | D | | 2 | 6 | 37 | 23 | D | |
| | SOUTHWEST | 3 | 20 | 7 | 20 | 346 | A | 3 | 20 | 7 | 30 | 30 | 40 | B | | 3 | 7 | 43 | 39 | C | |
| | NORTHWEST | 4 | 20 | 8 | 20 | 289 | A | 4 | 20 | 8 | 30 | 50 | 44 | B | | 4 | 8 | 37 | 42 | B | |
| ***Tenth Ave @ 35th St*** | NORTHEAST | 1 | 16 | 5 | 15 | 568 | A | 1 | 16 | 5 | 15 | 30 | 32 | C | | 1 | 5 | 34 | 33 | C | |
| | SOUTHEAST | 2 | 15 | 6 | 15 | 616 | A | 2 | 15 | 6 | 15 | 50 | 14 | E | Yes | 2 | 6 | 46 | 15 | D | |
| | SOUTHWEST | 3 | 15 | 7 | 13 | 654 | A | 3 | 15 | 7 | 18 | 30 | 42 | B | | 3 | 7 | 34 | 42 | B | |
| | NORTHWEST | 4 | 9 | 8 | 14 | 509 | A | 4 | 9 | 8 | 24 | 50 | 61 | B | | 4 | 8 | 46 | 61 | B | |

# Appendix S.5.4

**Pedestrian Improvement Analysis - Corner Level of Service**

**2025 Future Conditions (AM)**

| Intersection | Corner Location | 2025 Future without the Proposed Action | | | | | 2025 Future with the Proposed Action | | | | | | | 2025 Future with the Proposed Action (Improvement) | | | | | |
|---|---|---|---|---|---|---|---|---|---|---|---|---|---|---|---|---|---|---|---|
| | | Sidewalk Width for No Build Condition | | | | Pedestrian Flow Rate (s.f./ped.) | Level of Service | Sidewalk Width for Build Condition | | Pedestrian Green | Pedestrian Flow Rate (s.f./ped.) | Level of Service | Impact? | Proposed Sidewalk Width Improvement | | Signal Timing | Pedestrian Flow Rate (s.f./ped.) | Level of Service | Still Impact? |
| ***Tenth Ave @ 36th St*** | NORTHEAST | 1 | 15 | 5 | 15 | 290 | A | 1 | 15 | 5 | 15 | 30 | 48 | B | | 1 | 5 | 31 | 48 | B | |
| | SOUTHEAST | 2 | 16 | 6 | 15 | 167 | A | 2 | 16 | 6 | 15 | 50 | 41 | B | | 2 | 6 | 49 | 41 | B | |
| | SOUTHWEST | 3 | 12 | 7 | 12 | 219 | A | 3 | 12 | 7 | 18 | 30 | 65 | B | | 3 | 7 | 31 | 65 | B | |
| | NORTHWEST | 4 | 12 | 8 | 12 | 352 | A | 4 | 12 | 8 | 22 | 50 | 78 | B | | 4 | 8 | 49 | 78 | B | |
| ***Tenth Ave @ 37th St*** | NORTHEAST | 1 | 15 | 5 | 15 | 360 | A | 1 | 15 | 5 | 15 | 32 | 32 | C | | 1 | 5 | | 32 | C | |
| | SOUTHEAST | 2 | 15 | 6 | 15 | 408 | A | 2 | 15 | 6 | 15 | 48 | 28 | C | | 2 | 6 | | 28 | C | |
| | SOUTHWEST | 3 | 12 | 7 | 12 | 697 | A | 3 | 12 | 7 | 17 | 32 | 49 | B | | 3 | 7 | | 49 | B | |
| | NORTHWEST | 4 | 12 | 8 | 12 | 479 | A | 4 | 12 | 8 | 22 | 48 | 70 | B | | 4 | 8 | | 70 | B | |
| ***Tenth Ave @ 38th St*** | NORTHEAST | 1 | 15 | 5 | 15 | 1226 | A | 1 | 15 | 5 | 15 | 30 | 38 | C | | 1 | 5 | | 38 | C | |
| | SOUTHEAST | 2 | 15 | 6 | 15 | 1968 | A | 2 | 15 | 6 | 15 | 50 | 47 | B | | 2 | 6 | | 47 | B | |
| | SOUTHWEST | 3 | 12 | 7 | 12 | 1557 | A | 3 | 12 | 7 | 17 | 30 | 64 | B | | 3 | 7 | | 64 | B | |
| | NORTHWEST | 4 | 12 | 8 | 12 | 1128 | A | 4 | 12 | 8 | 22 | 50 | 72 | B | | 4 | 8 | | 72 | B | |
| ***Tenth Ave @ 39th St*** | NORTHEAST | 1 | 15 | 5 | 15 | 793 | A | 1 | 15 | 5 | 15 | 35 | 39 | C | | 1 | 5 | | 39 | C | |
| | SOUTHEAST | 2 | 15 | 6 | 15 | 583 | A | 2 | 15 | 6 | 15 | 45 | 33 | C | | 2 | 6 | | 33 | C | |
| | SOUTHWEST | 3 | 12 | 7 | 13 | 1057 | A | 3 | 12 | 7 | 18 | 35 | 64 | B | | 3 | 7 | | 64 | B | |
| | NORTHWEST | 4 | 12 | 8 | 10 | 870 | A | 4 | 12 | 8 | 10 | 45 | 25 | C | | 4 | 8 | | 25 | C | |
| ***Tenth Ave @ 40th St*** | NORTHEAST | 1 | 15 | 5 | 15 | 584 | A | 1 | 15 | 5 | 15 | 36 | 27 | C | | 1 | 5 | | 27 | C | |
| | SOUTHEAST | 2 | 15 | 6 | 15 | 735 | A | 2 | 15 | 6 | 15 | 44 | 46 | B | | 2 | 6 | | 46 | B | |
| | SOUTHWEST | 3 | 12 | 7 | 13 | 2350 | A | 3 | 12 | 7 | 13 | 36 | 59 | B | | 3 | 7 | | 59 | B | |
| | NORTHWEST | 4 | 12 | 8 | 13 | 1726 | A | 4 | 12 | 8 | 18 | 44 | 60 | B | | 4 | 8 | | 60 | B | |
| ***Tenth Ave @ 41st St*** | NORTHEAST | 1 | 15 | 5 | 16 | 247 | A | 1 | 15 | 5 | 16 | 45 | 47 | B | | 1 | 5 | | 47 | B | |
| | SOUTHEAST | 2 | 16 | 6 | 10 | 1070 | A | 2 | 16 | 6 | 10 | 35 | 38 | C | | 2 | 6 | | 38 | C | |
| | SOUTHWEST | 3 | 10 | 7 | 17 | 1197 | A | 3 | 10 | 7 | 17 | 45 | 27 | C | | 3 | 7 | | 27 | C | |
| | NORTHWEST | 4 | 14 | 8 | 12 | 333 | A | 4 | 14 | 8 | 12 | 35 | 56 | B | | 4 | 8 | | 56 | B | |
| ***Tenth Ave @ 42nd St*** | NORTHEAST | 1 | 20 | 5 | 16 | 271 | A | 1 | 20 | 5 | 16 | 28 | 138 | A | | 1 | 5 | 34 | 138 | A | |
| | SOUTHEAST | 2 | 22 | 6 | 16 | 275 | A | 2 | 22 | 6 | 16 | 52 | 58 | B | | 2 | 6 | 46 | 59 | B | |
| | SOUTHWEST | 3 | 21 | 7 | 15 | 230 | A | 3 | 21 | 7 | 15 | 28 | 45 | B | | 3 | 7 | 34 | 46 | B | |
| | NORTHWEST | 4 | 20 | 8 | 15 | 156 | A | 4 | 20 | 8 | 15 | 52 | 80 | B | | 4 | 8 | 46 | 81 | B | |
| ***Dyer @ 42nd St*** | NORTHEAST | 1 | | 5 | 6 | N/A | N/A | 1 | | 5 | 6 | 34 | N/A | N/A | | 1 | 5 | | N/A | N/A | |
| | SOUTHEAST | 2 | | 6 | 4 | 61 | B | 2 | | 6 | 4 | 46 | 66 | B | | 2 | 6 | | 66 | B | |
| | SOUTHWEST | 3 | 21 | 7 | 20 | 142 | A | 3 | 21 | 7 | 20 | 34 | 155 | A | | 3 | 7 | | 155 | A | |
| | NORTHWEST | 4 | 20 | 8 | 21 | N/A | N/A | 4 | 20 | 8 | 21 | 46 | N/A | N/A | | 4 | 8 | | N/A | N/A | |
| ***Ninth Ave @ 30th St*** | NORTHEAST | 1 | 16 | 5 | 16 | 151 | A | 1 | 16 | 5 | 16 | 36 | 73 | B | | 1 | 5 | 38 | 73 | B | |
| | SOUTHEAST | 2 | 15 | 6 | 16 | 148 | A | 2 | 15 | 6 | 16 | 44 | 86 | B | | 2 | 6 | 42 | 86 | B | |
| | SOUTHWEST | 3 | 13 | 7 | 14 | 74 | B | 3 | 13 | 7 | 14 | 36 | 53 | B | | 3 | 7 | 38 | 53 | B | |
| | NORTHWEST | 4 | 13 | 8 | 12 | 89 | B | 4 | 13 | 8 | 12 | 44 | 55 | B | | 4 | 8 | 42 | 55 | B | |
| ***Ninth Ave @ 31st St*** | NORTHEAST | 1 | 15 | 5 | 15 | 57 | B | 1 | 20 | 5 | 15 | 30 | 25 | C | | 1 | 5 | | 25 | C | |
| | SOUTHEAST | 2 | 13 | 6 | 15 | 69 | B | 2 | 13 | 6 | 15 | 50 | 46 | B | | 2 | 6 | | 46 | B | |
| | SOUTHWEST | 3 | 13 | 7 | 13 | 116 | B | 3 | 13 | 7 | 13 | 30 | 60 | B | | 3 | 7 | | 60 | B | |
| | NORTHWEST | 4 | 13 | 8 | 13 | 109 | B | 4 | 13 | 8 | 13 | 50 | 51 | B | | 4 | 8 | | 51 | B | |
| ***Ninth Ave @ 33rd St*** | NORTHEAST | 1 | 15 | 5 | 15 | 43 | B | 1 | 15 | 5 | 15 | 30 | 11 | E | Yes | 1 | 5 | 33 | 11 | E | Yes |
| | SOUTHEAST | 2 | 15 | 6 | 15 | 18 | D | 2 | 15 | 6 | 20 | 50 | 1 | F | Yes | 2 | 6 | 47 | 1 | F | Yes |
| | SOUTHWEST | 3 | 13 | 7 | 13 | 29 | C | 3 | 13 | 7 | 18 | 30 | 20 | D | | 3 | 7 | 33 | 20 | D | |
| | NORTHWEST | 4 | 13 | 8 | 13 | 50 | B | 4 | 13 | 8 | 13 | 50 | 15 | D | | 4 | 8 | 47 | 15 | D | |

# Appendix S.5.4

**Pedestrian Improvement Analysis - Corner Level of Service**

**2025 Future Conditions (AM)**

| Intersection | Corner Location | 2025 Future without the Proposed Action | | | | | 2025 Future with the Proposed Action | | | | | | | 2025 Future with the Proposed Action (Improvement) | | | | | |
|---|---|---|---|---|---|---|---|---|---|---|---|---|---|---|---|---|---|---|---|
| | | Sidewalk Width for No Build Condition | | | | Pedestrian Flow Rate (s.f./ped.) | Level of Service | Sidewalk Width for Build Condition | | | | Pedestrian Green | Pedestrian Flow Rate (s.f./ped.) | Level of Service | Impact? | Proposed Sidewalk Width Improvement | | Signal Timing | Pedestrian Flow Rate (s.f./ped.) | Level of Service | Still Impact? |
| ***Ninth Ave @ 34th St*** | NORTHEAST | 1 | 15 | 5 | 15 | 60 | B | 1 | 15 | 5 | 15 | 30 | 29 | C | | 1 | 5 | 35 | 29 | C | |
| | SOUTHEAST | 2 | 15 | 6 | 15 | 60 | B | 2 | 15 | 6 | 15 | 35 | 22 | D | | 2 | 6 | 25 | 22 | D | |
| | SOUTHWEST | 3 | 23 | 7 | 20 | 64 | B | 3 | 23 | 7 | 20 | 30 | 21 | D | | 3 | 7 | 35 | 21 | D | |
| | NORTHWEST | 4 | 23 | 8 | 20 | 56 | B | 4 | 23 | 8 | 20 | 35 | 29 | C | | 4 | 8 | 25 | 28 | C | |
| ***Ninth Ave @ 37th St*** | NORTHEAST | 1 | 15 | 5 | 15 | 132 | A | 1 | 15 | 5 | 15 | 30 | 43 | B | | 1 | 5 | 32 | 43 | B | |
| | SOUTHEAST | 2 | 15 | 6 | 15 | 124 | B | 2 | 15 | 6 | 15 | 50 | 46 | B | | 2 | 6 | 48 | 46 | B | |
| | SOUTHWEST | 3 | 12 | 7 | 12 | 95 | B | 3 | 12 | 7 | 12 | 30 | 45 | B | | 3 | 7 | 32 | 45 | B | |
| | NORTHWEST | 4 | 12 | 8 | 12 | 70 | B | 4 | 12 | 8 | 12 | 50 | 33 | C | | 4 | 8 | 48 | 33 | C | |
| ***Ninth Ave @ 38th St*** | NORTHEAST | 1 | 15 | 5 | 15 | 132 | A | 1 | 15 | 5 | 15 | 30 | 37 | C | | 1 | 5 | | 37 | C | |
| | SOUTHEAST | 2 | 15 | 6 | 15 | 130 | A | 2 | 15 | 6 | 15 | 50 | 37 | C | | 2 | 6 | | 37 | C | |
| | SOUTHWEST | 3 | 11 | 7 | 11 | 285 | A | 3 | 11 | 7 | 11 | 30 | 77 | B | | 3 | 7 | | 77 | B | |
| | NORTHWEST | 4 | 11 | 8 | 11 | 256 | A | 4 | 11 | 8 | 11 | 50 | 73 | B | | 4 | 8 | | 73 | B | |
| ***Ninth Ave @ 39th St*** | NORTHEAST | 1 | 15 | 5 | 15 | 121 | B | 1 | 15 | 5 | 15 | 30 | 40 | B | | 1 | 5 | | 40 | B | |
| | SOUTHEAST | 2 | 15 | 6 | 15 | 122 | B | 2 | 15 | 6 | 15 | 50 | 40 | B | | 2 | 6 | | 40 | B | |
| | SOUTHWEST | 3 | 12 | 7 | 12 | 213 | A | 3 | 12 | 7 | 12 | 30 | 88 | B | | 3 | 7 | | 88 | B | |
| | NORTHWEST | 4 | 12 | 8 | 12 | 211 | A | 4 | 12 | 8 | 12 | 50 | 99 | B | | 4 | 8 | | 99 | B | |
| ***Ninth Ave @ 42nd St*** | NORTHEAST | 1 | 16 | 5 | 14 | 18 | D | 1 | 16 | 5 | 14 | 29 | 9 | E | Yes | 1 | 5 | | 9 | E | Yes |
| | SOUTHEAST | 2 | 10 | 6 | 15 | 79 | B | 2 | 10 | 6 | 15 | 35 | 47 | B | | 2 | 6 | | 47 | B | |
| | SOUTHWEST | 3 | 11 | 7 | 20 | 101 | B | 3 | 11 | 7 | 20 | 29 | 58 | B | | 3 | 7 | | 58 | B | |
| | NORTHWEST | 4 | 19 | 8 | 21 | 102 | B | 4 | 19 | 8 | 21 | 35 | 72 | B | | 4 | 8 | | 72 | B | |
| ***Eighth Ave @ 30th St*** | NORTHEAST | 1 | 14 | 5 | 15 | 101 | B | 1 | 14 | 5 | 15 | 38 | 52 | B | | 1 | 5 | | 52 | B | |
| | SOUTHEAST | 2 | 15 | 6 | 14 | 144 | A | 2 | 15 | 6 | 14 | 42 | 74 | B | | 2 | 6 | | 74 | B | |
| | SOUTHWEST | 3 | 13 | 7 | 14 | 165 | A | 3 | 13 | 7 | 14 | 38 | 104 | B | | 3 | 7 | | 104 | B | |
| | NORTHWEST | 4 | 14 | 8 | 13 | 129 | B | 4 | 14 | 8 | 13 | 42 | 85 | B | | 4 | 8 | | 85 | B | |
| ***Eighth Ave @ 31st St*** | NORTHEAST | 1 | 16 | 5 | 15 | 328 | A | 1 | 16 | 5 | 15 | 40 | 51 | B | | 1 | 5 | | 51 | B | |
| | SOUTHEAST | 2 | 24 | 6 | 15 | 69 | B | 2 | 20 | 6 | 15 | 40 | 29 | C | | 2 | 6 | | 29 | C | |
| | SOUTHWEST | 3 | 49 | 7 | 13 | 85 | B | 3 | 18 | 7 | 13 | 40 | 55 | B | | 3 | 7 | | 55 | B | |
| | NORTHWEST | 4 | 14 | 8 | 24 | 104 | B | 4 | 14 | 8 | 24 | 40 | 87 | B | | 4 | 8 | | 87 | B | |
| ***Eighth Ave @ 33rd St*** | NORTHEAST | 1 | 15 | 5 | 43 | 50 | B | 1 | 15 | 5 | 20 | 47 | 25 | C | | 1 | 5 | 42 | 25 | C | |
| | SOUTHEAST | 2 | 19 | 6 | 16 | 283 | A | 2 | 19 | 6 | 16 | 33 | 25 | C | | 2 | 6 | 38 | 25 | C | |
| | SOUTHWEST | 3 | 17 | 7 | 24 | 24 | C | 3 | 17 | 7 | 24 | 47 | 20 | D | | 3 | 7 | 42 | 20 | D | |
| | NORTHWEST | 4 | 43 | 8 | 14 | 12 | E | 4 | 18 | 8 | 14 | 33 | 9 | E | Yes | 4 | 8 | 38 | 9 | E | Yes |
| ***Eighth Ave @ 34th St*** | NORTHEAST | 1 | 15 | 5 | 15 | 61 | B | 1 | 15 | 5 | 15 | 40 | 32 | C | | 1 | 5 | 33 | 30 | C | |
| | SOUTHEAST | 2 | 15 | 6 | 15 | 71 | B | 2 | 15 | 6 | 15 | 40 | 36 | C | | 2 | 6 | 35 | 34 | C | |
| | SOUTHWEST | 3 | 22 | 7 | 22 | 57 | B | 3 | 22 | 7 | 22 | 40 | 41 | B | | 3 | 7 | 33 | 39 | C | |
| | NORTHWEST | 4 | 22 | 8 | 22 | 51 | B | 4 | 22 | 8 | 22 | 40 | 36 | C | | 4 | 8 | 35 | 34 | C | |
| ***Eighth Ave @ 37th St*** | NORTHEAST | 1 | 15 | 5 | 15 | 45 | B | 1 | 15 | 5 | 15 | 36 | 36 | C | | 1 | 5 | | 36 | C | |
| | SOUTHEAST | 2 | 15 | 6 | 15 | 49 | B | 2 | 15 | 6 | 15 | 44 | 36 | C | | 2 | 6 | | 36 | C | |
| | SOUTHWEST | 3 | 12 | 7 | 12 | 35 | C | 3 | 12 | 7 | 12 | 36 | 29 | C | | 3 | 7 | | 29 | C | |
| | NORTHWEST | 4 | 12 | 8 | 13 | 42 | B | 4 | 12 | 8 | 13 | 44 | 36 | C | | 4 | 8 | | 36 | C | |
| ***Eighth Ave @ 38th St*** | NORTHEAST | 1 | 15 | 5 | 15 | 87 | B | 1 | 15 | 5 | 15 | 38 | 71 | B | | 1 | 5 | | 71 | B | |
| | SOUTHEAST | 2 | 15 | 6 | 15 | 101 | B | 2 | 15 | 6 | 15 | 42 | 73 | B | | 2 | 6 | | 73 | B | |
| | SOUTHWEST | 3 | 12 | 7 | 11 | 61 | B | 3 | 12 | 7 | 11 | 38 | 43 | B | | 3 | 7 | | 43 | B | |
| | NORTHWEST | 4 | 12 | 8 | 11 | 48 | B | 4 | 12 | 8 | 11 | 42 | 39 | C | | 4 | 8 | | 39 | C | |

# Appendix S.5.4

**Pedestrian Improvement Analysis - Corner Level of Service**

**2025 Future Conditions (AM)**

| Intersection | Corner Location | 2025 Future without the Proposed Action | | | | 2025 Future with the Proposed Action | | | | | | 2025 Future with the Proposed Action (Improvement) | | | | |
|---|---|---|---|---|---|---|---|---|---|---|---|---|---|---|---|---|
| | | Sidewalk Width for No Build Condition | | Pedestrian Flow Rate (s.f./ped.) | Level of Service | Sidewalk Width for Build Condition | | Pedestrian Green | Pedestrian Flow Rate (s.f./ped.) | Level of Service | Impact? | Proposed Sidewalk Width Improvement | | Signal Timing | Pedestrian Flow Rate (s.f./ped.) | Level of Service | Still Impact? |
| ***Eighth Ave @ 39th St*** | NORTHEAST | 1 15 | 5 15 | 17.0 | D | 1 15 | 5 15 | 40 | 17.0 | D | | 1 | 5 | | 17 | D | |
| | SOUTHEAST | 2 15 | 6 15 | 26 | C | 2 15 | 6 15 | 40 | 24 | C | | 2 | 6 | | 24 | C | |
| | SOUTHWEST | 3 12 | 7 12 | 27 | C | 3 12 | 7 12 | 40 | 24 | C | | 3 | 7 | | 24 | C | |
| | NORTHWEST | 4 12 | 8 12 | 21 | D | 4 12 | 8 12 | 40 | 22 | D | | 4 | 8 | | 22 | D | |
| ***Eighth Ave @ 42nd St*** | NORTHEAST | 1 15 | 5 12 | 45 | B | 1 15 | 5 12 | 25 | 42 | B | | 1 | 5 | 30 | 43 | B | |
| | SOUTHEAST | 2 16 | 6 29 | 8 | E | 2 16 | 6 29 | 35 | 7 | E | Yes | 2 | 6 | 37 | 8 | E | |
| | SOUTHWEST | 3 23 | 7 34 | 58 | B | 3 23 | 7 34 | 25 | 55 | B | | 3 | 7 | 30 | 57 | B | |
| | NORTHWEST | 4 16 | 8 20 | 23 | D | 4 16 | 8 20 | 35 | 21 | D | | 4 | 8 | 37 | 22 | D | |
| ***Seventh Ave @ 31st St*** | NORTHEAST | 1 23 | 5 20 | 34 | C | 1 23 | 5 20 | 38 | 29 | C | | 1 | 5 | 40 | 29 | C | |
| | SOUTHEAST | 2 23 | 6 20 | 51 | B | 2 23 | 6 20 | 42 | 44 | B | | 2 | 6 | 40 | 44 | B | |
| | SOUTHWEST | 3 13 | 7 13 | 46 | B | 3 13 | 7 13 | 38 | 38 | C | | 3 | 7 | 40 | 38 | C | |
| | NORTHWEST | 4 13 | 8 18 | 52 | B | 4 13 | 8 18 | 42 | 43 | B | | 4 | 8 | 40 | 43 | B | |
| ***Seventh Ave @ 33rd St*** | NORTHEAST | 1 20 | 5 20 | 24 | C | 1 20 | 5 20 | 22 | 21 | D | | 1 | 5 | 23 | 21 | D | |
| | SOUTHEAST | 2 20 | 6 40 | 16 | D | 2 20 | 6 40 | 58 | 13 | E | Yes | 2 | 6 | 57 | 13 | E | Yes |
| | SOUTHWEST | 3 13 | 7 40 | 177 | A | 3 13 | 7 40 | 22 | 149 | A | | 3 | 7 | 23 | 149 | A | |
| | NORTHWEST | 4 13 | 8 15 | 28 | C | 4 13 | 8 15 | 58 | 22 | D | | 4 | 8 | 57 | 22 | D | |
| ***Seventh Ave @ 34th St*** | NORTHEAST | 1 20 | 5 20 | 67 | B | 1 20 | 5 20 | 35 | 60 | B | | 1 | 5 | 38 | 60 | B | |
| | SOUTHEAST | 2 20 | 6 20 | 60 | B | 2 20 | 6 20 | 44 | 55 | B | | 2 | 6 | 41 | 55 | B | |
| | SOUTHWEST | 3 23 | 7 23 | 31 | C | 3 23 | 7 23 | 35 | 29 | C | | 3 | 7 | 38 | 28 | C | |
| | NORTHWEST | 4 23 | 8 23 | 35 | C | 4 23 | 8 23 | 44 | 32 | C | | 4 | 8 | 41 | 33 | C | |
| ***Sixth Ave @ 33rd St*** | NORTHEAST | 1 34 | 5 27 | 75 | B | 1 34 | 5 27 | 27 | 70 | B | | 1 | 5 | 25 | 70 | B | |
| | SOUTHEAST | 2 28 | 6 24 | 62 | B | 2 28 | 6 24 | 90 | 49 | B | | 2 | 6 | | 48 | B | |
| | SOUTHWEST | 3 13 | 7 13 | 34 | C | 3 13 | 7 13 | 27 | 27 | C | | 3 | 7 | 25 | 26 | C | |
| | NORTHWEST | 4 13 | 8 13 | 74 | B | 4 13 | 8 13 | 39 | 71 | B | | 4 | 8 | 37 | 70 | B | |
| ***Sixth Ave @ 34th St*** | NORTHEAST | 1 | 5 17 | 41 | B | 1 | 5 17 | 27 | 39 | C | | 1 | 5 | | 39 | C | |
| | SOUTHEAST | 2 17 | 6 | 45 | B | 2 17 | 6 | 53 | 44 | B | | 2 | 6 | | 44 | B | |
| | SOUTHWEST | 3 23 | 7 | N/A | N/A | 3 23 | 7 | 27 | N/A | N/A | | 3 | 7 | | N/A | N/A | |
| | NORTHWEST | 4 23 | 8 | N/A | N/A | 4 23 | 8 | 53 | N/A | N/A | | 4 | 8 | | N/A | N/A | |
| ***Broadway @ 34th St*** | NORTHEAST | 1 30 | 5 | N/A | N/A | 1 30 | 5 | 27 | N/A | N/A | | 1 | 5 | | N/A | N/A | |
| | SOUTHEAST | 2 | 6 30 | N/A | N/A | 2 | 6 30 | 53 | N/A | N/A | | 2 | 6 | | N/A | N/A | |
| | SOUTHWEST | 3 | 7 23 | 70 | B | 3 | 7 23 | 27 | 68 | B | | 3 | 7 | | 68 | B | |
| | NORTHWEST | 4 | 8 23 | 48 | B | 4 | 8 23 | 53 | 46 | B | | 4 | 8 | | 46 | B | |
| ***Blvd @ 33rd St*** | NORTHEAST | | | N/A | N/A | 1 15 | 5 | 30 | 22 | D | | 1 | 5 | 45 | 23 | D | |
| | SOUTHEAST | | | N/A | N/A | 2 18 | 6 | 50 | N/A | N/A | | 2 | 6 | 45 | N/A | N/A | |
| | SOUTHWEST | | | N/A | N/A | 3 18 | 7 13 | 30 | N/A | N/A | | 3 | 7 | 45 | N/A | N/A | |
| | NORTHWEST | | | N/A | N/A | 4 13 | 8 18 | 50 | 8 | E | | 4 | 8 | 45 | 10 | E | |
| ***Blvd @ 34th St*** | NORTHEAST | | | N/A | N/A | 1 18 | 5 18 | 30 | 89 | B | | 1 | 5 | | 89 | B | |
| | SOUTHEAST | | | N/A | N/A | 2 18 | 6 18 | 50 | 80 | B | | 2 | 6 | | 80 | B | |
| | SOUTHWEST | | | N/A | N/A | 3 30 | 7 30 | 30 | 80 | B | | 3 | 7 | | 80 | B | |
| | NORTHWEST | | | N/A | N/A | 4 30 | 8 30 | 50 | 95 | B | | 4 | 8 | | 95 | B | |
| ***N.Blvd @ 35th St*** | NORTHEAST | | | N/A | N/A | 1 | 5 18 | 40 | 57 | B | | 1 | 5 | | 57 | B | |
| | SOUTHEAST | | | N/A | N/A | 2 18 | 6 18 | 40 | 30 | C | | 2 | 6 | | 30 | C | |
| | SOUTHWEST | | | N/A | N/A | 3 24 | 7 18 | 40 | 62 | B | | 3 | 7 | | 62 | B | |
| | NORTHWEST | | | N/A | N/A | 4 18 | 8 | 40 | N/A | N/A | | 4 | 8 | | N/A | N/A | |

# Appendix S.5.4

**Pedestrian Improvement Analysis - Corner Level of Service**

**2025 Future Conditions (AM)**

| Intersection | Corner Location | 2025 Future without the Proposed Action | | | | 2025 Future with the Proposed Action | | | | | | | | 2025 Future with the Proposed Action (Improvement) | | | | | |
|---|---|---|---|---|---|---|---|---|---|---|---|---|---|---|---|---|---|---|---|
| | | Sidewalk Width for No Build Condition | | Pedestrian Flow Rate (s.f./ped.) | Level of Service | Sidewalk Width for Build Condition | | | | Pedestrian Green | Pedestrian Flow Rate (s.f./ped.) | Level of Service | Impact? | Proposed Sidewalk Width Improvement | | Signal Timing | Pedestrian Flow Rate (s.f./ped.) | Level of Service | Still Impact? |
| ***N.Blvd @ 36th St*** | NORTHEAST | | | N/A | N/A | 1 | | 5 | 18 | 40 | 148 | A | | 1 | 5 | | 148 | A | |
| | SOUTHEAST | | | N/A | N/A | 2 | 18 | 6 | | 40 | 71 | B | | 2 | 6 | | 71 | B | |
| | SOUTHWEST | | | N/A | N/A | 3 | 22 | 7 | | 40 | N/A | N/A | | 3 | 7 | | N/A | N/A | |
| | NORTHWEST | | | N/A | N/A | 4 | 18 | 8 | | 40 | N/A | N/A | | 4 | 8 | | N/A | N/A | |
| ***N.Blvd @ 37th St*** | NORTHEAST | | | N/A | N/A | 1 | | 5 | 18 | 32 | 123 | B | | 1 | 5 | | 123 | B | |
| | SOUTHEAST | | | N/A | N/A | 2 | 18 | 6 | | 48 | 100 | B | | 2 | 6 | | 100 | B | |
| | SOUTHWEST | | | N/A | N/A | 3 | 22 | 7 | | 32 | N/A | N/A | | 3 | 7 | | N/A | N/A | |
| | NORTHWEST | | | N/A | N/A | 4 | 17 | 8 | | 48 | N/A | N/A | | 4 | 8 | | N/A | N/A | |
| ***Blvd @ 38th St*** | NORTHEAST | | | N/A | N/A | 1 | 18 | 5 | 18 | 40 | 121 | B | | 1 | 5 | | 121 | B | |
| | SOUTHEAST | | | N/A | N/A | 2 | 18 | 6 | 18 | 40 | 78 | B | | 2 | 6 | | 78 | B | |
| | SOUTHWEST | | | N/A | N/A | 3 | 22 | 7 | 17 | 40 | 40 | B | | 3 | 7 | | 40 | B | |
| | NORTHWEST | | | N/A | N/A | 4 | 17 | 8 | 22 | 40 | 50 | B | | 4 | 8 | | 50 | B | |
| ***S.Blvd @ 35th St*** | NORTHEAST | | | N/A | N/A | 1 | 18 | 5 | | 30 | N/A | N/A | | 1 | 5 | | N/A | N/A | |
| | SOUTHEAST | | | N/A | N/A | 2 | | 6 | | 50 | N/A | N/A | | 2 | 6 | | N/A | N/A | |
| | SOUTHWEST | | | N/A | N/A | 3 | | 7 | 18 | 30 | N/A | N/A | | 3 | 7 | | N/A | N/A | |
| | NORTHWEST | | | N/A | N/A | 4 | | 8 | 24 | 50 | 45 | B | | 4 | 8 | | 45 | B | |
| ***S.Blvd @ 36th St*** | NORTHEAST | | | N/A | N/A | 1 | 18 | 5 | | 30 | N/A | N/A | | 1 | 5 | | N/A | N/A | |
| | SOUTHEAST | | | N/A | N/A | 2 | | 6 | 18 | 50 | N/A | N/A | | 2 | 6 | | N/A | N/A | |
| | SOUTHWEST | | | N/A | N/A | 3 | | 7 | 18 | 30 | 66 | B | | 3 | 7 | | 66 | B | |
| | NORTHWEST | | | N/A | N/A | 4 | | 8 | 22 | 50 | 126 | B | | 4 | 8 | | 126 | B | |
| ***S.Blvd @ 37th St*** | NORTHEAST | | | N/A | N/A | 1 | 18 | 5 | | 32 | N/A | N/A | | 1 | 5 | | N/A | N/A | |
| | SOUTHEAST | | | N/A | N/A | 2 | | 6 | 18 | 48 | N/A | N/A | | 2 | 6 | | N/A | N/A | |
| | SOUTHWEST | | | N/A | N/A | 3 | | 7 | 17 | 32 | 59 | B | | 3 | 7 | | 59 | B | |
| | NORTHWEST | | | N/A | N/A | 4 | | 8 | 22 | 48 | 70 | B | | 4 | 8 | | 70 | B | |

# Appendix S.5.4

**Pedestrian Improvement Analysis - Corner Level of Service**

**2025 Future Conditions (MD)**

| Intersection | Corner Location | 2025 Future without the Proposed Action | | | | | 2025 Future with the Proposed Action | | | | | | | 2025 Future with the Proposed Action (Improvement) | | | | | |
|---|---|---|---|---|---|---|---|---|---|---|---|---|---|---|---|---|---|---|---|
| | | Sidewalk Width for No Build Condition | | | | Pedestrian Flow Rate (s.f./ped.) | Level of Service | Sidewalk Width for Build Condition | | Pedestrian Green | Pedestrian Flow Rate (s.f./ped.) | Level of Service | Impact? | Proposed Sidewalk Width | | Signal Timing | Pedestrian Flow Rate (s.f./ped.) | Level of Service | Still Impact? |
| ***Twelfth Ave @ 30th St*** | NORTHEAST | 1 | 15 | 5 | 15 | 7991 | A | 1 | 15 | 5 | 15 | 24 | 3993 | A | | 1 | 5 | | 3993 | A | |
| | SOUTHEAST | 2 | 11 | 6 | 15 | 7128 | A | 2 | 11 | 6 | 15 | 70 | 3233 | A | | 2 | 6 | 69 | 3233 | A | |
| | SOUTHWEST | 3 | 13 | 7 | | N/A | N/A | 3 | 13 | 7 | | 24 | N/A | N/A | | 3 | 7 | | N/A | N/A | |
| | NORTHWEST | 4 | 13 | 8 | | N/A | N/A | 4 | 13 | 8 | | 70 | N/A | N/A | | 4 | 8 | 69 | N/A | N/A | |
| ***Twelfth Ave @ 34th St*** | NORTHEAST | 1 | 15 | 5 | 12 | 2080 | A | 1 | 15 | 5 | 12 | 29 | 1807 | A | | 1 | 5 | 33 | 1980 | A | |
| | SOUTHEAST | 2 | 12 | 6 | 15 | 338 | A | 2 | 12 | 6 | 15 | 60 | 321 | A | | 2 | 6 | 54 | 328 | A | |
| | SOUTHWEST | 3 | 18 | 7 | | N/A | N/A | 3 | 18 | 7 | | 29 | N/A | N/A | | 3 | 7 | 33 | N/A | N/A | |
| | NORTHWEST | 4 | 18 | 8 | | N/A | N/A | 4 | 18 | 8 | | 60 | N/A | N/A | | 4 | 8 | 54 | N/A | N/A | |
| ***Twelfth Ave @ 39th St*** | NORTHEAST | 1 | 15 | 5 | 18 | 3098 | A | 1 | 15 | 5 | 18 | 30 | N/A | N/A | | 1 | 5 | | N/A | N/A | |
| | SOUTHEAST | 2 | 13 | 6 | 15 | 597 | A | 2 | 13 | 6 | 15 | 49 | N/A | N/A | | 2 | 6 | 67 | N/A | N/A | |
| | SOUTHWEST | 3 | 13 | 7 | | N/A | N/A | 3 | | 7 | | 30 | N/A | N/A | | 3 | 7 | | N/A | N/A | |
| | NORTHWEST | 4 | 13 | 8 | | N/A | N/A | 4 | | 8 | | 49 | N/A | N/A | | 4 | 8 | 67 | N/A | N/A | |
| ***Twelfth Ave @ 40th St*** | NORTHEAST | 1 | 15 | 5 | 14 | 4195 | A | 1 | 15 | 5 | 14 | 0 | N/A | N/A | | 1 | 5 | | N/A | N/A | |
| | SOUTHEAST | 2 | 13 | 6 | 15 | 4702 | A | 2 | 13 | 6 | 15 | 63 | N/A | N/A | | 2 | 6 | | N/A | N/A | |
| | SOUTHWEST | 3 | 11 | 7 | | N/A | N/A | 3 | | 7 | | 0 | N/A | N/A | | 3 | 7 | | N/A | N/A | |
| | NORTHWEST | 4 | 12 | 8 | | N/A | N/A | 4 | | 8 | | 63 | N/A | N/A | | 4 | 8 | | N/A | N/A | |
| ***Twelfth Ave @ 42nd St*** | NORTHEAST | 1 | 15 | 5 | 20 | 385 | A | 1 | 15 | 5 | 20 | 33 | 417 | A | | 1 | 5 | | 417 | A | |
| | SOUTHEAST | 2 | 20 | 6 | 15 | 927 | A | 2 | 20 | 6 | 15 | 45 | 910 | A | | 2 | 6 | | 910 | A | |
| | SOUTHWEST | 3 | 15 | 7 | | N/A | N/A | 3 | 15 | 7 | | 33 | N/A | N/A | | 3 | 7 | | N/A | N/A | |
| | NORTHWEST | 4 | 26 | 8 | | N/A | N/A | 4 | 26 | 8 | | 45 | N/A | N/A | | 4 | 8 | | N/A | N/A | |
| ***Eleventh Ave @ 29th St*** | NORTHEAST | 1 | 15 | 5 | 15 | 265 | A | 1 | 15 | 5 | 15 | 40 | 53 | B | | 1 | 5 | | 53 | B | |
| | SOUTHEAST | 2 | 15 | 6 | 15 | 264 | A | 2 | 15 | 6 | 15 | 40 | 62 | B | | 2 | 6 | | 62 | B | |
| | SOUTHWEST | 3 | 13 | 7 | 13 | 679 | A | 3 | 13 | 7 | 13 | 40 | 96 | B | | 3 | 7 | | 96 | B | |
| | NORTHWEST | 4 | 13 | 8 | 13 | 678 | A | 4 | 13 | 8 | 13 | 40 | 92 | B | | 4 | 8 | | 93 | B | |
| ***Eleventh Ave @ 30th St*** | NORTHEAST | 1 | 15 | 5 | 15 | 146 | A | 1 | 15 | 5 | 15 | 40 | 38 | C | | 1 | 5 | | 38 | C | |
| | SOUTHEAST | 2 | 15 | 6 | 15 | 266 | A | 2 | 20 | 6 | 15 | 40 | 29 | C | | 2 | 6 | | 29 | C | |
| | SOUTHWEST | 3 | 13 | 7 | 13 | 328 | A | 3 | 13 | 7 | 13 | 40 | 57 | B | | 3 | 7 | | 57 | B | |
| | NORTHWEST | 4 | 13 | 8 | 13 | 170 | A | 4 | 13 | 8 | 13 | 40 | 47 | B | | 4 | 8 | | 47 | B | |
| ***Eleventh Ave @ 33rd St*** | NORTHEAST | 1 | 15 | 5 | 15 | 138 | A | 1 | 15 | 5 | 20 | 25 | 84 | B | | 1 | 5 | | 84 | B | |
| | SOUTHEAST | 2 | 15 | 6 | 15 | 587 | A | 2 | 20 | 6 | 15 | 55 | 52 | B | | 2 | 6 | | 52 | B | |
| | SOUTHWEST | 3 | 13 | 7 | 13 | 3297 | A | 3 | 18 | 7 | | 25 | N/A | N/A | | 3 | 7 | | N/A | N/A | |
| | NORTHWEST | 4 | 13 | 8 | 13 | 2743 | A | 4 | 13 | 8 | | 55 | N/A | N/A | | 4 | 8 | | N/A | N/A | |
| ***Eleventh Ave @ 34th St*** | NORTHEAST | 1 | 15 | 5 | 15 | 135 | A | 1 | 15 | 5 | 20 | 27 | 82 | B | | 1 | 5 | 28 | 79 | B | |
| | SOUTHEAST | 2 | 12 | 6 | 15 | 182 | A | 2 | 17 | 6 | 15 | 53 | 109 | B | | 2 | 6 | 40 | 106 | B | |
| | SOUTHWEST | 3 | 20 | 7 | 20 | 398 | A | 3 | 30 | 7 | 20 | 27 | 84 | B | | 3 | 7 | 28 | 82 | B | |
| | NORTHWEST | 4 | 20 | 8 | 20 | 345 | A | 4 | 30 | 8 | 20 | 53 | 81 | B | | 4 | 8 | 40 | 79 | B | |
| ***Eleventh Ave @ 35th St*** | NORTHEAST | 1 | 19 | 5 | 11 | 241 | A | 1 | 19 | 5 | 16 | 40 | 72 | B | | 1 | 5 | | 72 | B | |
| | SOUTHEAST | 2 | 15 | 6 | 15 | 168 | A | 2 | 15 | 6 | 15 | 40 | 61 | B | | 2 | 6 | | 61 | B | |
| | SOUTHWEST | 3 | 14 | 7 | | N/A | N/A | 3 | 24 | 7 | | 40 | N/A | N/A | | 3 | 7 | | N/A | N/A | |
| | NORTHWEST | 4 | 14 | 8 | | N/A | N/A | 4 | 19 | 8 | | 40 | N/A | N/A | | 4 | 8 | | N/A | N/A | |
| ***Eleventh Ave @ 36th St*** | NORTHEAST | 1 | 15 | 5 | 15 | 130 | A | 1 | 15 | 5 | 20 | 22 | 68 | B | | 1 | 5 | | 68 | B | |
| | SOUTHEAST | 2 | 9 | 6 | 17 | 152 | A | 2 | 15 | 6 | 17 | 22 | 64 | B | | 2 | 6 | | 64 | B | |
| | SOUTHWEST | 3 | 13 | 7 | | N/A | N/A | 3 | 22 | 7 | | 22 | N/A | N/A | | 3 | 7 | | N/A | N/A | |
| | NORTHWEST | 4 | 10 | 8 | | N/A | N/A | 4 | 18 | 8 | | 22 | N/A | N/A | | 4 | 8 | | N/A | N/A | |

# Appendix S.5.4

**Pedestrian Improvement Analysis - Corner Level of Service**

**2025 Future Conditions (MD)**

| Intersection | Corner Location | 2025 Future without the Proposed Action | | | | | | 2025 Future with the Proposed Action | | | | | | | | 2025 Future with the Proposed Action (Improvement) | | | | | |
|---|---|---|---|---|---|---|---|---|---|---|---|---|---|---|---|---|---|---|---|---|---|
| | | Sidewalk Width for No Build Condition | | | | Pedestrian Flow Rate (s.f./ped.) | Level of Service | Sidewalk Width for Build Condition | | | | Pedestrian Green | Pedestrian Flow Rate (s.f./ped.) | Level of Service | Impact? | Proposed Sidewalk Width | | Signal Timing | Pedestrian Flow Rate (s.f./ped.) | Level of Service | Still Impact? |
| ***Eleventh Ave @ 37th St*** | NORTHEAST | 1 | 15 | 5 | 10 | 123 | B | 1 | 15 | 5 | 15 | 22 | 76 | B | | 1 | 5 | 30 | 75 | B | |
| | SOUTHEAST | 2 | 10 | 6 | 15 | 108 | B | 2 | 15 | 6 | 15 | 58 | 59 | B | | 2 | 6 | 50 | 57 | B | |
| | SOUTHWEST | 3 | 12 | 7 | | N/A | N/A | 3 | 22 | 7 | | 22 | N/A | N/A | | 3 | 7 | 30 | N/A | N/A | |
| | NORTHWEST | 4 | 12 | 8 | | N/A | N/A | 4 | 17 | 8 | | 58 | N/A | N/A | | 4 | 8 | 50 | N/A | N/A | |
| ***Eleventh Ave @ 38th St*** | NORTHEAST | 1 | 15 | 5 | 10 | 388 | A | 1 | 15 | 5 | 15 | 22 | 92 | B | | 1 | 5 | | 92 | B | |
| | SOUTHEAST | 2 | 10 | 6 | 15 | 640 | A | 2 | 15 | 6 | 15 | 22 | 77 | B | | 2 | 6 | | 77 | B | |
| | SOUTHWEST | 3 | 11 | 7 | | N/A | N/A | 3 | 22 | 7 | | 22 | N/A | N/A | | 3 | 7 | | N/A | N/A | |
| | NORTHWEST | 4 | 11 | 8 | | N/A | N/A | 4 | 17 | 8 | | 22 | N/A | N/A | | 4 | 8 | | N/A | N/A | |
| ***Eleventh Ave @ 39th St*** | NORTHEAST | 1 | 14 | 5 | 10 | 777 | A | 1 | 14 | 5 | 15 | 31 | 88 | B | | 1 | 5 | 41 | 85 | B | |
| | SOUTHEAST | 2 | 10 | 6 | 15 | 253 | A | 2 | 15 | 6 | 15 | 49 | 121 | B | | 2 | 6 | 39 | 119 | B | |
| | SOUTHWEST | 3 | 12 | 7 | 13 | 485 | A | 3 | 12 | 7 | | 31 | N/A | N/A | | 3 | 7 | 41 | N/A | N/A | |
| | NORTHWEST | 4 | 11 | 8 | 15 | 1246 | A | 4 | 18 | 8 | | 49 | N/A | N/A | | 4 | 8 | 39 | N/A | N/A | |
| ***Eleventh Ave @ 40th St*** | NORTHEAST | 1 | 15 | 5 | 10 | 1527 | A | 1 | 15 | 5 | 15 | 22 | 105 | B | | 1 | 5 | | 105 | B | |
| | SOUTHEAST | 2 | 10 | 6 | 15 | 1212 | A | 2 | 15 | 6 | 15 | 22 | 145 | A | | 2 | 6 | | 145 | A | |
| | SOUTHWEST | 3 | 13 | 7 | 13 | 1568 | A | 3 | 18 | 7 | | 22 | N/A | N/A | | 3 | 7 | | N/A | N/A | |
| | NORTHWEST | 4 | 13 | 8 | 13 | 1494 | A | 4 | 18 | 8 | | 22 | N/A | N/A | | 4 | 8 | | N/A | N/A | |
| ***Eleventh Ave @ 42nd St*** | NORTHEAST | 1 | 16 | 5 | 16 | 163 | A | 1 | 16 | 5 | 16 | 33 | 77 | B | | 1 | 5 | | 77 | B | |
| | SOUTHEAST | 2 | 16 | 6 | 15 | 219 | A | 2 | 16 | 6 | 15 | 35 | 47 | B | | 2 | 6 | | 47 | B | |
| | SOUTHWEST | 3 | 15 | 7 | 16 | 208 | A | 3 | 15 | 7 | 16 | 33 | 67 | B | | 3 | 7 | | 67 | B | |
| | NORTHWEST | 4 | 15 | 8 | 16 | 167 | A | 4 | 15 | 8 | 16 | 35 | 110 | B | | 4 | 8 | | 110 | B | |
| ***Tenth Ave @ 29th St*** | NORTHEAST | 1 | 15 | 5 | 15 | 152 | A | 1 | 15 | 5 | 15 | 30 | 52 | B | | 1 | 5 | | 52 | B | |
| | SOUTHEAST | 2 | 15 | 6 | 15 | 127 | B | 2 | 15 | 6 | 15 | 50 | 48 | B | | 2 | 6 | | 48 | B | |
| | SOUTHWEST | 3 | 13 | 7 | 13 | 113 | B | 3 | 13 | 7 | 13 | 30 | 23 | D | | 3 | 7 | | 23 | D | |
| | NORTHWEST | 4 | 13 | 8 | 13 | 122 | B | 4 | 13 | 8 | 13 | 50 | 22 | D | | 4 | 8 | | 22 | D | |
| ***Tenth Ave @ 30th St*** | NORTHEAST | 1 | 16 | 5 | 15 | 103 | B | 1 | 16 | 5 | 15 | 30 | 18 | D | | 1 | 5 | 31 | 18 | D | |
| | SOUTHEAST | 2 | 15 | 6 | 15 | 218 | A | 2 | 15 | 6 | 15 | 50 | 51 | B | | 2 | 6 | 49 | 51 | B | |
| | SOUTHWEST | 3 | 13 | 7 | 14 | 175 | A | 3 | 13 | 7 | 14 | 30 | 19 | D | | 3 | 7 | 31 | 18 | D | |
| | NORTHWEST | 4 | 15 | 8 | 14 | 98 | B | 4 | 15 | 8 | 14 | 50 | 11 | E | Yes | 4 | 8 | 49 | 11 | E | Yes |
| ***Tenth Ave @ 31st St*** | NORTHEAST | 1 | 15 | 5 | 15 | 117 | B | 1 | 15 | 5 | 15 | 30 | 27 | C | | 1 | 5 | 33 | 28 | C | |
| | SOUTHEAST | 2 | 15 | 6 | 15 | 221 | A | 2 | 15 | 6 | 15 | 50 | 47 | B | | 2 | 6 | 47 | 47 | B | |
| | SOUTHWEST | 3 | 13 | 7 | | N/A | N/A | 3 | 13 | 7 | | 30 | N/A | N/A | | 3 | 7 | 33 | N/A | N/A | |
| | NORTHWEST | 4 | 13 | 8 | | N/A | N/A | 4 | 13 | 8 | | 50 | N/A | N/A | | 4 | 8 | 47 | N/A | N/A | |
| ***Tenth Ave @ 33rd St*** | NORTHEAST | 1 | 15 | 5 | 15 | 63 | B | 1 | 15 | 5 | 15 | 32 | 14 | E | Yes | 1 | 5 | | 14 | E | Yes |
| | SOUTHEAST | 2 | 15 | 6 | 15 | 64 | B | 2 | 15 | 6 | 15 | 48 | 10 | E | Yes | 2 | 6 | | 10 | E | Yes |
| | SOUTHWEST | 3 | 13 | 7 | 13 | 59 | B | 3 | 13 | 7 | 13 | 32 | 3 | F | Yes | 3 | 7 | | 3 | F | Yes |
| | NORTHWEST | 4 | 13 | 8 | 13 | 63 | B | 4 | 13 | 8 | 18 | 48 | 12 | E | Yes | 4 | 8 | | 12 | E | Yes |
| ***Tenth Ave @ 34th St*** | NORTHEAST | 1 | 15 | 5 | 15 | 115 | B | 1 | 15 | 5 | 15 | 30 | 15 | D | | 1 | 5 | 40 | 15 | D | |
| | SOUTHEAST | 2 | 15 | 6 | 15 | 130 | A | 2 | 15 | 6 | 15 | 50 | 9 | E | Yes | 2 | 6 | 40 | 10 | E | Yes |
| | SOUTHWEST | 3 | 20 | 7 | 20 | 151 | A | 3 | 20 | 7 | 30 | 30 | 14 | E | Yes | 3 | 7 | 40 | 14 | E | Yes |
| | NORTHWEST | 4 | 20 | 8 | 20 | 112 | B | 4 | 20 | 8 | 30 | 50 | 18 | D | | 4 | 8 | 40 | 17 | D | |
| ***Tenth Ave @ 35th St*** | NORTHEAST | 1 | 16 | 5 | 15 | 232 | A | 1 | 16 | 5 | 15 | 30 | 19 | D | | 1 | 5 | | 19 | D | |
| | SOUTHEAST | 2 | 15 | 6 | 15 | 179 | A | 2 | 15 | 6 | 15 | 50 | 6 | E | Yes | 2 | 6 | | 6 | E | Yes |
| | SOUTHWEST | 3 | 15 | 7 | 13 | 209 | A | 3 | 15 | 7 | 18 | 30 | 16 | D | | 3 | 7 | | 16 | D | |
| | NORTHWEST | 4 | 9 | 8 | 14 | 182 | A | 4 | 9 | 8 | 24 | 50 | 27 | C | | 4 | 8 | | 27 | C | |

# Appendix S.5.4

**Pedestrian Improvement Analysis - Corner Level of Service**

**2025 Future Conditions (MD)**

| Intersection | Corner Location | 2025 Future without the Proposed Action | | | | | 2025 Future with the Proposed Action | | | | | | | 2025 Future with the Proposed Action (Improvement) | | | | | |
|---|---|---|---|---|---|---|---|---|---|---|---|---|---|---|---|---|---|---|---|
| | | Sidewalk Width for No Build Condition | | | | Pedestrian Flow Rate (s.f./ped.) | Level of Service | Sidewalk Width for Build Condition | | | | Pedestrian Green | Pedestrian Flow Rate (s.f./ped.) | Level of Service | Impact? | Proposed Sidewalk Width | | Signal Timing | Pedestrian Flow Rate (s.f./ped.) | Level of Service | Still Impact? |
| ***Tenth Ave @ 36th St*** | NORTHEAST | 1 | 15 | 5 | 15 | 292 | A | 1 | 15 | 5 | 15 | 30 | 26 | C | | 1 | 5 | | 26 | C | |
| | SOUTHEAST | 2 | 16 | 6 | 15 | 359 | A | 2 | 16 | 6 | 15 | 50 | 20 | D | | 2 | 6 | | 20 | D | |
| | SOUTHWEST | 3 | 12 | 7 | 12 | 287 | A | 3 | 12 | 7 | 18 | 30 | 25 | C | | 3 | 7 | | 25 | C | |
| | NORTHWEST | 4 | 12 | 8 | 12 | 204 | A | 4 | 12 | 8 | 22 | 50 | 34 | C | | 4 | 8 | | 34 | C | |
| ***Tenth Ave @ 37th St*** | NORTHEAST | 1 | 15 | 5 | 15 | 218 | A | 1 | 15 | 5 | 15 | 32 | 13 | E | Yes | 1 | 5 | | 13 | E | Yes |
| | SOUTHEAST | 2 | 15 | 6 | 15 | 268 | A | 2 | 15 | 6 | 15 | 48 | 21 | D | | 2 | 6 | | 21 | D | |
| | SOUTHWEST | 3 | 12 | 7 | 12 | 298 | A | 3 | 12 | 7 | 17 | 32 | 30 | C | | 3 | 7 | | 30 | C | |
| | NORTHWEST | 4 | 12 | 8 | 12 | 227 | A | 4 | 12 | 8 | 22 | 48 | 31 | C | | 4 | 8 | | 31 | C | |
| ***Tenth Ave @ 38th St*** | NORTHEAST | 1 | 15 | 5 | 15 | 285 | A | 1 | 15 | 5 | 15 | 30 | 15 | D | | 1 | 5 | | 15 | D | |
| | SOUTHEAST | 2 | 15 | 6 | 15 | 358 | A | 2 | 15 | 6 | 15 | 50 | 20 | D | | 2 | 6 | | 20 | D | |
| | SOUTHWEST | 3 | 12 | 7 | 12 | 399 | A | 3 | 12 | 7 | 17 | 30 | 34 | C | | 3 | 7 | | 34 | C | |
| | NORTHWEST | 4 | 12 | 8 | 12 | 326 | A | 4 | 12 | 8 | 22 | 50 | 39 | C | | 4 | 8 | | 39 | C | |
| ***Tenth Ave @ 39th St*** | NORTHEAST | 1 | 15 | 5 | 15 | 263 | A | 1 | 15 | 5 | 15 | 35 | 31 | C | | 1 | 5 | | 31 | C | |
| | SOUTHEAST | 2 | 15 | 6 | 15 | 283 | A | 2 | 15 | 6 | 15 | 45 | 21 | D | | 2 | 6 | | 21 | D | |
| | SOUTHWEST | 3 | 12 | 7 | 13 | 355 | A | 3 | 12 | 7 | 18 | 35 | 45 | B | | 3 | 7 | | 45 | B | |
| | NORTHWEST | 4 | 12 | 8 | 10 | 227 | A | 4 | 12 | 8 | 10 | 45 | 24 | C | | 4 | 8 | | 24 | C | |
| ***Tenth Ave @ 40th St*** | NORTHEAST | 1 | 15 | 5 | 15 | 325 | A | 1 | 15 | 5 | 15 | 36 | 19 | D | | 1 | 5 | | 19 | D | |
| | SOUTHEAST | 2 | 15 | 6 | 15 | 413 | A | 2 | 15 | 6 | 15 | 44 | 34 | C | | 2 | 6 | | 34 | C | |
| | SOUTHWEST | 3 | 12 | 7 | 13 | 451 | A | 3 | 12 | 7 | 13 | 36 | 53 | B | | 3 | 7 | | 53 | B | |
| | NORTHWEST | 4 | 12 | 8 | 13 | 297 | A | 4 | 12 | 8 | 18 | 44 | 48 | B | | 4 | 8 | | 48 | B | |
| ***Tenth Ave @ 41st St*** | NORTHEAST | 1 | 15 | 5 | 16 | 161 | A | 1 | 15 | 5 | 16 | 45 | 23 | D | | 1 | 5 | | 23 | D | |
| | SOUTHEAST | 2 | 16 | 6 | 10 | 392 | A | 2 | 16 | 6 | 10 | 35 | 27 | C | | 2 | 6 | | 27 | C | |
| | SOUTHWEST | 3 | 10 | 7 | 17 | 260 | A | 3 | 10 | 7 | 17 | 45 | 23 | D | | 3 | 7 | | 23 | D | |
| | NORTHWEST | 4 | 14 | 8 | 12 | 213 | A | 4 | 14 | 8 | 12 | 35 | 40 | B | | 4 | 8 | | 40 | B | |
| ***Tenth Ave @ 42nd St*** | NORTHEAST | 1 | 20 | 5 | 16 | 201 | A | 1 | 20 | 5 | 16 | 28 | 89 | B | | 1 | 5 | | 89 | B | |
| | SOUTHEAST | 2 | 22 | 6 | 16 | 185 | A | 2 | 22 | 6 | 16 | 52 | 35 | C | | 2 | 6 | | 35 | C | |
| | SOUTHWEST | 3 | 21 | 7 | 15 | 136 | A | 3 | 21 | 7 | 15 | 28 | 34 | C | | 3 | 7 | | 34 | C | |
| | NORTHWEST | 4 | 20 | 8 | 15 | 115 | B | 4 | 20 | 8 | 15 | 52 | 64 | B | | 4 | 8 | | 64 | B | |
| ***Dyer @ 42nd St*** | NORTHEAST | 1 | | 5 | 6 | N/A | N/A | 1 | | 5 | 6 | 34 | N/A | N/A | | 1 | 5 | | N/A | N/A | |
| | SOUTHEAST | 2 | | 6 | 4 | 53 | B | 2 | | 6 | 4 | 46 | 53 | B | | 2 | 6 | | 53 | B | |
| | SOUTHWEST | 3 | 21 | 7 | 20 | 123 | B | 3 | 21 | 7 | 20 | 34 | 123 | B | | 3 | 7 | | 123 | B | |
| | NORTHWEST | 4 | 20 | 8 | 21 | N/A | N/A | 4 | 20 | 8 | 21 | 46 | N/A | N/A | | 4 | 8 | | N/A | N/A | |
| ***Ninth Ave @ 30th St*** | NORTHEAST | 1 | 16 | 5 | 16 | 44 | B | 1 | 16 | 5 | 16 | 36 | 19 | D | | 1 | 5 | | 19 | D | |
| | SOUTHEAST | 2 | 15 | 6 | 16 | 62 | B | 2 | 15 | 6 | 16 | 44 | 31 | C | | 2 | 6 | | 31 | C | |
| | SOUTHWEST | 3 | 13 | 7 | 14 | 67 | B | 3 | 13 | 7 | 14 | 36 | 30 | C | | 3 | 7 | | 30 | C | |
| | NORTHWEST | 4 | 13 | 8 | 12 | 53 | B | 4 | 13 | 8 | 12 | 44 | 20 | D | | 4 | 8 | | 20 | D | |
| ***Ninth Ave @ 31st St*** | NORTHEAST | 1 | 15 | 5 | 15 | 13 | E | 1 | 20 | 5 | 15 | 30 | 7 | E | Yes | 1 | 5 | | 7 | E | Yes |
| | SOUTHEAST | 2 | 13 | 6 | 15 | 26 | C | 2 | 13 | 6 | 15 | 50 | 16 | D | | 2 | 6 | | 16 | D | |
| | SOUTHWEST | 3 | 13 | 7 | 13 | 39 | C | 3 | 13 | 7 | 13 | 30 | 20 | D | | 3 | 7 | | 20 | D | |
| | NORTHWEST | 4 | 13 | 8 | 13 | 30 | C | 4 | 13 | 8 | 13 | 50 | 23 | D | | 4 | 8 | | 23 | D | |
| ***Ninth Ave @ 33rd St*** | NORTHEAST | 1 | 15 | 5 | 15 | 18 | D | 1 | 15 | 5 | 15 | 30 | 8 | E | Yes | 1 | 5 | | 8 | E | Yes |
| | SOUTHEAST | 2 | 15 | 6 | 15 | 12 | E | 2 | 15 | 6 | 20 | 50 | 4 | F | Yes | 2 | 6 | | 4 | F | Yes |
| | SOUTHWEST | 3 | 13 | 7 | 13 | 16 | D | 3 | 13 | 7 | 18 | 30 | 19 | D | | 3 | 7 | | 19 | D | |
| | NORTHWEST | 4 | 13 | 8 | 13 | 27 | C | 4 | 13 | 8 | 13 | 50 | 10 | E | Yes | 4 | 8 | | 10 | E | Yes |

# Appendix S.5.4

**Pedestrian Improvement Analysis - Corner Level of Service**

**2025 Future Conditions (MD)**

| Intersection | Corner Location | 2025 Future without the Proposed Action | | | | | 2025 Future with the Proposed Action | | | | | | | 2025 Future with the Proposed Action (Improvement) | | | | | |
|---|---|---|---|---|---|---|---|---|---|---|---|---|---|---|---|---|---|---|---|
| | | Sidewalk Width for No Build Condition | | | | Pedestrian Flow Rate (s.f./ped.) | Level of Service | Sidewalk Width for Build Condition | | | | Pedestrian Green | Pedestrian Flow Rate (s.f./ped.) | Level of Service | Impact? | Proposed Sidewalk Width | | Signal Timing | Pedestrian Flow Rate (s.f./ped.) | Level of Service | Still Impact? |
| ***Ninth Ave @ 34th St*** | NORTHEAST | 1 | 15 | 5 | 15 | 43 | B | 1 | 15 | 5 | 15 | 30 | 22 | D | | 1 | 5 | | 22 | D | |
| | SOUTHEAST | 2 | 15 | 6 | 15 | 43 | B | 2 | 15 | 6 | 15 | 35 | 17 | D | | 2 | 6 | | 17 | D | |
| | SOUTHWEST | 3 | 23 | 7 | 20 | 46 | B | 3 | 23 | 7 | 20 | 30 | 13 | E | Yes | 3 | 7 | | 13 | E | Yes |
| | NORTHWEST | 4 | 23 | 8 | 20 | 40 | B | 4 | 23 | 8 | 20 | 35 | 16 | D | | 4 | 8 | | 16 | D | |
| ***Ninth Ave @ 37th St*** | NORTHEAST | 1 | 15 | 5 | 15 | 61 | B | 1 | 15 | 5 | 15 | 30 | 17 | D | | 1 | 5 | | 17 | D | |
| | SOUTHEAST | 2 | 15 | 6 | 15 | 65 | B | 2 | 15 | 6 | 15 | 50 | 20 | D | | 2 | 6 | | 20 | D | |
| | SOUTHWEST | 3 | 12 | 7 | 12 | 68 | B | 3 | 12 | 7 | 12 | 30 | 23 | D | | 3 | 7 | | 23 | D | |
| | NORTHWEST | 4 | 12 | 8 | 12 | 50 | B | 4 | 12 | 8 | 12 | 50 | 15 | D | | 4 | 8 | | 15 | D | |
| ***Ninth Ave @ 38th St*** | NORTHEAST | 1 | 15 | 5 | 15 | 139 | A | 1 | 15 | 5 | 15 | 30 | 23 | D | | 1 | 5 | 31 | 23 | D | |
| | SOUTHEAST | 2 | 15 | 6 | 15 | 130 | A | 2 | 15 | 6 | 15 | 50 | 23 | D | | 2 | 6 | 49 | 23 | D | |
| | SOUTHWEST | 3 | 11 | 7 | 11 | 156 | A | 3 | 11 | 7 | 11 | 30 | 32 | C | | 3 | 7 | 31 | 32 | C | |
| | NORTHWEST | 4 | 11 | 8 | 11 | 142 | A | 4 | 11 | 8 | 11 | 50 | 30 | C | | 4 | 8 | 49 | 30 | C | |
| ***Ninth Ave @ 39th St*** | NORTHEAST | 1 | 15 | 5 | 15 | 92 | B | 1 | 15 | 5 | 15 | 30 | 30 | C | | 1 | 5 | | 30 | C | |
| | SOUTHEAST | 2 | 15 | 6 | 15 | 78 | B | 2 | 15 | 6 | 15 | 50 | 24 | C | | 2 | 6 | | 24 | C | |
| | SOUTHWEST | 3 | 12 | 7 | 12 | 152 | A | 3 | 12 | 7 | 12 | 30 | 45 | B | | 3 | 7 | | 45 | B | |
| | NORTHWEST | 4 | 12 | 8 | 12 | 188 | A | 4 | 12 | 8 | 12 | 50 | 62 | B | | 4 | 8 | | 62 | B | |
| ***Ninth Ave @ 42nd St*** | NORTHEAST | 1 | 16 | 5 | 14 | 11 | E | 1 | 16 | 5 | 14 | 29 | 5 | F | Yes | 1 | 5 | 28 | 5 | F | Yes |
| | SOUTHEAST | 2 | 10 | 6 | 15 | 53 | B | 2 | 10 | 6 | 15 | 35 | 29 | C | | 2 | 6 | | 29 | C | |
| | SOUTHWEST | 3 | 11 | 7 | 20 | 66 | B | 3 | 11 | 7 | 20 | 29 | 37 | C | | 3 | 7 | 28 | 37 | C | |
| | NORTHWEST | 4 | 19 | 8 | 21 | 74 | B | 4 | 19 | 8 | 21 | 35 | 52 | B | | 4 | 8 | | 52 | B | |
| ***Eighth Ave @ 30th St*** | NORTHEAST | 1 | 14 | 5 | 15 | 72 | B | 1 | 14 | 5 | 15 | 40 | 33 | C | | 1 | 5 | | 33 | C | |
| | SOUTHEAST | 2 | 15 | 6 | 14 | 91 | B | 2 | 15 | 6 | 14 | 40 | 42 | B | | 2 | 6 | | 42 | B | |
| | SOUTHWEST | 3 | 13 | 7 | 14 | 88 | B | 3 | 13 | 7 | 14 | 40 | 62 | B | | 3 | 7 | | 62 | B | |
| | NORTHWEST | 4 | 14 | 8 | 13 | 78 | B | 4 | 14 | 8 | 13 | 40 | 55 | B | | 4 | 8 | | 55 | B | |
| ***Eighth Ave @ 31st St*** | NORTHEAST | 1 | 16 | 5 | 15 | 259 | A | 1 | 16 | 5 | 15 | 40 | 34 | C | | 1 | 5 | | 34 | C | |
| | SOUTHEAST | 2 | 24 | 6 | 15 | 55 | B | 2 | 20 | 6 | 15 | 40 | 19 | D | | 2 | 6 | | 19 | D | |
| | SOUTHWEST | 3 | 49 | 7 | 13 | 41 | B | 3 | 18 | 7 | 13 | 40 | 28 | C | | 3 | 7 | | 28 | C | |
| | NORTHWEST | 4 | 14 | 8 | 24 | 59 | B | 4 | 14 | 8 | 24 | 40 | 47 | B | | 4 | 8 | | 47 | B | |
| ***Eighth Ave @ 33rd St*** | NORTHEAST | 1 | 15 | 5 | 43 | 36 | C | 1 | 15 | 5 | 20 | 47 | 17 | D | | 1 | 5 | 40 | 18 | D | |
| | SOUTHEAST | 2 | 19 | 6 | 16 | 206 | A | 2 | 19 | 6 | 16 | 33 | 16 | D | | 2 | 6 | 40 | 16 | D | |
| | SOUTHWEST | 3 | 17 | 7 | 24 | 24 | C | 3 | 17 | 7 | 24 | 47 | 21 | D | | 3 | 7 | 40 | 21 | D | |
| | NORTHWEST | 4 | 43 | 8 | 14 | 14 | E | 4 | 18 | 8 | 14 | 33 | 11 | E | Yes | 4 | 8 | 40 | 11 | E | Yes |
| ***Eighth Ave @ 34th St*** | NORTHEAST | 1 | 15 | 5 | 15 | 35 | C | 1 | 15 | 5 | 15 | 40 | 21 | D | | 1 | 5 | 32 | 19 | D | |
| | SOUTHEAST | 2 | 15 | 6 | 15 | 47 | B | 2 | 15 | 6 | 15 | 40 | 26 | C | | 2 | 6 | 32 | 23 | D | |
| | SOUTHWEST | 3 | 22 | 7 | 22 | 35 | C | 3 | 22 | 7 | 22 | 40 | 30 | C | | 3 | 7 | 32 | 27 | C | |
| | NORTHWEST | 4 | 22 | 8 | 22 | 25 | C | 4 | 22 | 8 | 22 | 40 | 22 | D | | 4 | 8 | 32 | 19 | D | |
| ***Eighth Ave @ 37th St*** | NORTHEAST | 1 | 15 | 5 | 15 | 30 | C | 1 | 15 | 5 | 15 | 40 | 24 | C | | 1 | 5 | | 24 | C | |
| | SOUTHEAST | 2 | 15 | 6 | 15 | 28 | C | 2 | 15 | 6 | 15 | 40 | 21 | D | | 2 | 6 | | 21 | D | |
| | SOUTHWEST | 3 | 12 | 7 | 12 | 22 | D | 3 | 12 | 7 | 12 | 40 | 18 | D | | 3 | 7 | | 18 | D | |
| | NORTHWEST | 4 | 12 | 8 | 13 | 28 | C | 4 | 12 | 8 | 13 | 40 | 24 | C | | 4 | 8 | | 24 | C | |
| ***Eighth Ave @ 38th St*** | NORTHEAST | 1 | 15 | 5 | 15 | 46 | B | 1 | 15 | 5 | 15 | 40 | 40 | B | | 1 | 5 | | 40 | B | |
| | SOUTHEAST | 2 | 15 | 6 | 15 | 39 | C | 2 | 15 | 6 | 15 | 40 | 33 | C | | 2 | 6 | | 33 | C | |
| | SOUTHWEST | 3 | 12 | 7 | 11 | 45 | B | 3 | 12 | 7 | 11 | 40 | 33 | C | | 3 | 7 | | 33 | C | |
| | NORTHWEST | 4 | 12 | 8 | 11 | 42 | B | 4 | 12 | 8 | 11 | 40 | 33 | C | | 4 | 8 | | 33 | C | |

# Appendix S.5.4

**Pedestrian Improvement Analysis - Corner Level of Service**

**2025 Future Conditions (MD)**

| Intersection | Corner Location | 2025 Future without the Proposed Action | | | | | 2025 Future with the Proposed Action | | | | | | | | 2025 Future with the Proposed Action (Improvement) | | | | | |
|---|---|---|---|---|---|---|---|---|---|---|---|---|---|---|---|---|---|---|---|---|
| | | Sidewalk Width for No Build Condition | | | | Pedestrian Flow Rate (s.f./ped.) | Level of Service | Sidewalk Width for Build Condition | | | | Pedestrian Green | Pedestrian Flow Rate (s.f./ped.) | Level of Service | Impact? | Proposed Sidewalk Width | | Signal Timing | Pedestrian Flow Rate (s.f./ped.) | Level of Service | Still Impact? |
| ***Eighth Ave @ 39th St*** | NORTHEAST | 1 | 15 | 5 | 15 | 26 | C | 1 | 15 | 5 | 15 | 40 | 23 | D | | 1 | 5 | | 23 | D | |
| | SOUTHEAST | 2 | 15 | 6 | 15 | 8 | E | 2 | 15 | 6 | 15 | 40 | 7 | E | Yes | 2 | 6 | | 7 | E | Yes |
| | SOUTHWEST | 3 | 12 | 7 | 12 | 13 | E | 3 | 12 | 7 | 12 | 40 | 11 | E | Yes | 3 | 7 | | 11 | E | Yes |
| | NORTHWEST | 4 | 12 | 8 | 12 | 22 | D | 4 | 12 | 8 | 12 | 40 | 17 | D | | 4 | 8 | | 17 | D | |
| ***Eighth Ave @ 42nd St*** | NORTHEAST | 1 | 15 | 5 | 12 | 38 | C | 1 | 15 | 5 | 12 | 25 | 35 | C | | 1 | 5 | | 35 | C | |
| | SOUTHEAST | 2 | 16 | 6 | 29 | 7 | E | 2 | 16 | 6 | 29 | 35 | 5 | F | Yes | 2 | 6 | | 5 | F | Yes |
| | SOUTHWEST | 3 | 23 | 7 | 34 | 120 | B | 3 | 23 | 7 | 34 | 25 | 108 | B | | 3 | 7 | | 108 | B | |
| | NORTHWEST | 4 | 16 | 8 | 20 | 34 | C | 4 | 16 | 8 | 20 | 35 | 31 | C | | 4 | 8 | | 31 | C | |
| ***Seventh Ave @ 31st St*** | NORTHEAST | 1 | 23 | 5 | 20 | 38 | C | 1 | 23 | 5 | 20 | 38 | 29 | C | | 1 | 5 | | 29 | C | |
| | SOUTHEAST | 2 | 23 | 6 | 20 | 46 | B | 2 | 23 | 6 | 20 | 42 | 36 | C | | 2 | 6 | | 36 | C | |
| | SOUTHWEST | 3 | 13 | 7 | 13 | 63 | B | 3 | 13 | 7 | 13 | 38 | 36 | C | | 3 | 7 | | 36 | C | |
| | NORTHWEST | 4 | 13 | 8 | 18 | 79 | B | 4 | 13 | 8 | 18 | 42 | 50 | B | | 4 | 8 | | 50 | B | |
| ***Seventh Ave @ 33rd St*** | NORTHEAST | 1 | 20 | 5 | 20 | 23 | D | 1 | 20 | 5 | 20 | 22 | 19 | D | | 1 | 5 | 24 | 20 | D | |
| | SOUTHEAST | 2 | 20 | 6 | 40 | 19 | D | 2 | 20 | 6 | 40 | 58 | 15 | D | | 2 | 6 | 56 | 15 | D | |
| | SOUTHWEST | 3 | 13 | 7 | 40 | 195 | A | 3 | 13 | 7 | 40 | 22 | 152 | A | | 3 | 7 | 24 | 152 | A | |
| | NORTHWEST | 4 | 13 | 8 | 15 | 30 | C | 4 | 13 | 8 | 15 | 58 | 22 | D | | 4 | 8 | 56 | 23 | D | |
| ***Seventh Ave @ 34th St*** | NORTHEAST | 1 | 20 | 5 | 20 | 40 | B | 1 | 20 | 5 | 20 | 35 | 37 | C | | 1 | 5 | 39 | 37 | C | |
| | SOUTHEAST | 2 | 20 | 6 | 20 | 52 | B | 2 | 20 | 6 | 20 | 44 | 47 | B | | 2 | 6 | 40 | 47 | B | |
| | SOUTHWEST | 3 | 23 | 7 | 23 | 54 | B | 3 | 23 | 7 | 23 | 35 | 47 | B | | 3 | 7 | 39 | 47 | B | |
| | NORTHWEST | 4 | 23 | 8 | 23 | 36 | C | 4 | 23 | 8 | 23 | 44 | 33 | C | | 4 | 8 | 40 | 34 | C | |
| ***Sixth Ave @ 33rd St*** | NORTHEAST | 1 | 34 | 5 | 27 | 50 | B | 1 | 34 | 5 | 27 | 27 | 48 | B | | 1 | 5 | | 48 | B | |
| | SOUTHEAST | 2 | 28 | 6 | 24 | 51 | B | 2 | 28 | 6 | 24 | 90 | 48 | B | | 2 | 6 | | 48 | B | |
| | SOUTHWEST | 3 | 13 | 7 | 13 | 31 | C | 3 | 13 | 7 | 13 | 27 | 29 | C | | 3 | 7 | | 29 | C | |
| | NORTHWEST | 4 | 13 | 8 | 13 | 53 | B | 4 | 13 | 8 | 13 | 39 | 52 | B | | 4 | 8 | | 52 | B | |
| ***Sixth Ave @ 34th St*** | NORTHEAST | 1 | | 5 | 17 | 15 | D | 1 | | 5 | 17 | 27 | 15 | D | | 1 | 5 | | 15 | D | |
| | SOUTHEAST | 2 | 17 | 6 | | 17 | D | 2 | 17 | 6 | | 53 | 17 | D | | 2 | 6 | | 17 | D | |
| | SOUTHWEST | 3 | 23 | 7 | | N/A | N/A | 3 | 23 | 7 | | 27 | N/A | N/A | | 3 | 7 | | N/A | N/A | |
| | NORTHWEST | 4 | 23 | 8 | | N/A | N/A | 4 | 23 | 8 | | 53 | N/A | N/A | | 4 | 8 | | N/A | N/A | |
| ***Broadway @ 34th St*** | NORTHEAST | 1 | 30 | 5 | | N/A | N/A | 1 | 30 | 5 | | 27 | N/A | N/A | | 1 | 5 | | N/A | N/A | |
| | SOUTHEAST | 2 | | 6 | 30 | N/A | N/A | 2 | | 6 | 30 | 53 | N/A | N/A | | 2 | 6 | | N/A | N/A | |
| | SOUTHWEST | 3 | | 7 | 23 | 28 | C | 3 | | 7 | 23 | 27 | 26 | C | | 3 | 7 | | 26 | C | |
| | NORTHWEST | 4 | | 8 | 23 | 26 | C | 4 | | 8 | 23 | 53 | 25 | C | | 4 | 8 | | 25 | C | |
| ***Blvd @ 33rd St*** | NORTHEAST | | | | | N/A | N/A | 1 | 15 | 5 | | 45 | 24 | C | | 1 | 5 | | 24 | C | |
| | SOUTHEAST | | | | | N/A | N/A | 2 | 18 | 6 | | 45 | N/A | N/A | | 2 | 6 | | N/A | N/A | |
| | SOUTHWEST | | | | | N/A | N/A | 3 | 18 | 7 | 13 | 45 | N/A | N/A | | 3 | 7 | | N/A | N/A | |
| | NORTHWEST | | | | | N/A | N/A | 4 | 13 | 8 | 18 | 45 | 23 | D | | 4 | 8 | | 23 | D | |
| ***Blvd @ 34th St*** | NORTHEAST | | | | | N/A | N/A | 1 | 18 | 5 | 18 | 30 | 50 | B | | 1 | 5 | | 50 | B | |
| | SOUTHEAST | | | | | N/A | N/A | 2 | 18 | 6 | 18 | 50 | 53 | B | | 2 | 6 | | 53 | B | |
| | SOUTHWEST | | | | | N/A | N/A | 3 | 30 | 7 | 30 | 30 | 50 | B | | 3 | 7 | | 50 | B | |
| | NORTHWEST | | | | | N/A | N/A | 4 | 30 | 8 | 30 | 50 | 48 | B | | 4 | 8 | | 48 | B | |
| ***N.Blvd @ 35th St*** | NORTHEAST | | | | | N/A | N/A | 1 | | 5 | 18 | 40 | 40 | B | | 1 | 5 | | 40 | B | |
| | SOUTHEAST | | | | | N/A | N/A | 2 | 18 | 6 | 18 | 40 | 29 | C | | 2 | 6 | | 29 | C | |
| | SOUTHWEST | | | | | N/A | N/A | 3 | 24 | 7 | 18 | 40 | 76 | B | | 3 | 7 | | 76 | B | |
| | NORTHWEST | | | | | N/A | N/A | 4 | 18 | 8 | | 40 | N/A | N/A | | 4 | 8 | | N/A | N/A | |

# Appendix S.5.4

**Pedestrian Improvement Analysis - Corner Level of Service**

**2025 Future Conditions (MD)**

| Intersection | Corner Location | 2025 Future without the Proposed Action | | | | 2025 Future with the Proposed Action | | | | | | | | 2025 Future with the Proposed Action (Improvement) | | | | | |
|---|---|---|---|---|---|---|---|---|---|---|---|---|---|---|---|---|---|---|---|
| | | Sidewalk Width for No Build Condition | | Pedestrian Flow Rate (s.f./ped.) | Level of Service | Sidewalk Width for Build Condition | | | | Pedestrian Green | Pedestrian Flow Rate (s.f./ped.) | Level of Service | Impact? | Proposed Sidewalk Width | | Signal Timing | Pedestrian Flow Rate (s.f./ped.) | Level of Service | Still Impact? |
| ***N.Blvd @ 36th St*** | NORTHEAST | | | N/A | N/A | 1 | 5 | 18 | | 40 | 68 | B | | 1 | 5 | | 68 | B | |
| | SOUTHEAST | | | N/A | N/A | 2 | 18 | 6 | | 40 | 44 | B | | 2 | 6 | | 44 | B | |
| | SOUTHWEST | | | N/A | N/A | 3 | 22 | 7 | | 40 | N/A | N/A | | 3 | 7 | | N/A | N/A | |
| | NORTHWEST | | | N/A | N/A | 4 | 18 | 8 | | 40 | N/A | N/A | | 4 | 8 | | N/A | N/A | |
| ***N.Blvd @ 37th St*** | NORTHEAST | | | N/A | N/A | 1 | 5 | 18 | | 32 | 51 | B | | 1 | 5 | | 51 | B | |
| | SOUTHEAST | | | N/A | N/A | 2 | 18 | 6 | | 48 | 64 | B | | 2 | 6 | | 64 | B | |
| | SOUTHWEST | | | N/A | N/A | 3 | 22 | 7 | | 32 | N/A | N/A | | 3 | 7 | | N/A | N/A | |
| | NORTHWEST | | | N/A | N/A | 4 | 17 | 8 | | 48 | N/A | N/A | | 4 | 8 | | N/A | N/A | |
| ***Blvd @ 38th St*** | NORTHEAST | | | N/A | N/A | 1 | 18 | 5 | 18 | 40 | 63 | B | | 1 | 5 | | 63 | B | |
| | SOUTHEAST | | | N/A | N/A | 2 | 18 | 6 | 18 | 40 | 56 | B | | 2 | 6 | | 56 | B | |
| | SOUTHWEST | | | N/A | N/A | 3 | 22 | 7 | 17 | 40 | 38 | C | | 3 | 7 | | 38 | C | |
| | NORTHWEST | | | N/A | N/A | 4 | 17 | 8 | 22 | 40 | 43 | B | | 4 | 8 | | 43 | B | |
| ***S.Blvd @ 35th St*** | NORTHEAST | | | N/A | N/A | 1 | 18 | 5 | | 30 | N/A | N/A | | 1 | 5 | | N/A | N/A | |
| | SOUTHEAST | | | N/A | N/A | 2 | | 6 | | 50 | N/A | N/A | | 2 | 6 | | N/A | N/A | |
| | SOUTHWEST | | | N/A | N/A | 3 | | 7 | 18 | 30 | N/A | N/A | | 3 | 7 | | N/A | N/A | |
| | NORTHWEST | | | N/A | N/A | 4 | | 8 | 24 | 50 | 30 | C | | 4 | 8 | | 30 | C | |
| ***S.Blvd @ 36th St*** | NORTHEAST | | | N/A | N/A | 1 | 18 | 5 | | 30 | N/A | N/A | | 1 | 5 | | N/A | N/A | |
| | SOUTHEAST | | | N/A | N/A | 2 | | 6 | 18 | 50 | N/A | N/A | | 2 | 6 | | N/A | N/A | |
| | SOUTHWEST | | | N/A | N/A | 3 | | 7 | 18 | 30 | 32 | C | | 3 | 7 | | 32 | C | |
| | NORTHWEST | | | N/A | N/A | 4 | | 8 | 22 | 50 | 45 | B | | 4 | 8 | | 45 | B | |
| ***S.Blvd @ 37th St*** | NORTHEAST | | | N/A | N/A | 1 | 18 | 5 | | 32 | N/A | N/A | | 1 | 5 | | N/A | N/A | |
| | SOUTHEAST | | | N/A | N/A | 2 | | 6 | 18 | 48 | N/A | N/A | | 2 | 6 | | N/A | N/A | |
| | SOUTHWEST | | | N/A | N/A | 3 | | 7 | 17 | 32 | 38 | C | | 3 | 7 | | 38 | C | |
| | NORTHWEST | | | N/A | N/A | 4 | | 8 | 22 | 48 | 35 | C | | 4 | 8 | | 35 | C | |

# Appendix S.5.4

**Pedestrian Improvement Analysis - Corner Level of Service**

**2025 Future Conditions (PM)**

| Intersection | Corner Location | 2025 Future without the Proposed Action | | | | | 2025 Future with the Proposed Action | | | | | | 2025 Future with the Proposed Action (Improvement) | | | | |
|---|---|---|---|---|---|---|---|---|---|---|---|---|---|---|---|---|---|
| | | Sidewalk Width for No Build Condition | | | Pedestrian Flow Rate (s.f./ped.) | Level of Service | Sidewalk Width for Build Condition | | Signal Timing | Pedestrian Flow Rate (s.f./ped.) | Level of Service | Impact? | Proposed Sidewalk Width Improvement | | Signal Timing | Pedestrian Flow Rate (s.f./ped.) | Level of Service | Still Impact? |
| ***Twelfth Ave @ 30th St*** | NORTHEAST | 1 | 5 | 15 | 2995 | A | 1 | 5 | 15 | 1994 | A | | 1 | 5 | | 1994 | A | |
| | SOUTHEAST | 2 | 11 | 6 | 5092 | A | 2 | 11 | 6 | 78 | 2362 | A | | 2 | 6 | 77 | 2362 | A | |
| | SOUTHWEST | 3 | 13 | 7 | N/A | N/A | 3 | 13 | 7 | 18 | N/A | N/A | | 3 | 7 | | N/A | N/A | |
| | NORTHWEST | 4 | 13 | 8 | N/A | N/A | 4 | 13 | 8 | 78 | N/A | N/A | | 4 | 8 | 77 | N/A | N/A | |
| ***Twelfth Ave @ 34th St*** | NORTHEAST | 1 | 5 | 12 | 1541 | A | 1 | 5 | 12 | 29 | 1343 | A | | 1 | 5 | 35 | 1343 | A | |
| | SOUTHEAST | 2 | 12 | 6 | 361 | A | 2 | 12 | 6 | 67 | 337 | A | | 2 | 6 | 56 | 339 | A | |
| | SOUTHWEST | 3 | 18 | 7 | N/A | N/A | 3 | 18 | 7 | 29 | N/A | N/A | | 3 | 7 | 35 | N/A | N/A | |
| | NORTHWEST | 4 | 18 | 8 | N/A | N/A | 4 | 18 | 8 | 67 | N/A | N/A | | 4 | 8 | 56 | N/A | N/A | |
| ***Twelfth Ave @ 39th St*** | NORTHEAST | 1 | 5 | 18 | 6202 | A | 1 | 5 | 18 | 30 | N/A | N/A | | 1 | 5 | | N/A | N/A | |
| | SOUTHEAST | 2 | 13 | 6 | 659 | A | 2 | 13 | 6 | 53 | N/A | N/A | | 2 | 6 | 68 | N/A | N/A | |
| | SOUTHWEST | 3 | 13 | 7 | N/A | N/A | 3 | | 7 | 30 | N/A | N/A | | 3 | 7 | | N/A | N/A | |
| | NORTHWEST | 4 | 13 | 8 | N/A | N/A | 4 | | 8 | 53 | N/A | N/A | | 4 | 8 | 68 | N/A | N/A | |
| ***Twelfth Ave @ 40th St*** | NORTHEAST | 1 | 5 | 14 | 6298 | A | 1 | 5 | 14 | 0 | N/A | N/A | | 1 | 5 | | N/A | N/A | |
| | SOUTHEAST | 2 | 13 | 6 | 5478 | A | 2 | 13 | 6 | 66 | N/A | N/A | | 2 | 6 | | N/A | N/A | |
| | SOUTHWEST | 3 | 11 | 7 | N/A | N/A | 3 | | 7 | 0 | N/A | N/A | | 3 | 7 | | N/A | N/A | |
| | NORTHWEST | 4 | 12 | 8 | N/A | N/A | 4 | | 8 | 66 | N/A | N/A | | 4 | 8 | | N/A | N/A | |
| ***Twelfth Ave @ 42nd St*** | NORTHEAST | 1 | 5 | 20 | 391 | A | 1 | 5 | 20 | 33 | 394 | A | | 1 | 5 | 31 | 393 | A | |
| | SOUTHEAST | 2 | 20 | 6 | 906 | A | 2 | 20 | 6 | 60 | 921 | A | | 2 | 6 | 59 | 920 | A | |
| | SOUTHWEST | 3 | 15 | 7 | N/A | N/A | 3 | 15 | 7 | 33 | N/A | N/A | | 3 | 7 | 31 | N/A | N/A | |
| | NORTHWEST | 4 | 26 | 8 | N/A | N/A | 4 | 26 | 8 | 60 | N/A | N/A | | 4 | 8 | 59 | N/A | N/A | |
| ***Eleventh Ave @ 29th St*** | NORTHEAST | 1 | 15 | 5 | 15 | 703 | A | 1 | 15 | 5 | 15 | 40 | 128 | B | | 1 | 5 | | 130 | A | |
| | SOUTHEAST | 2 | 15 | 6 | 15 | 620 | A | 2 | 15 | 6 | 15 | 40 | 194 | A | | 2 | 6 | | 194 | A | |
| | SOUTHWEST | 3 | 13 | 7 | 13 | 1262 | A | 3 | 13 | 7 | 13 | 40 | 329 | A | | 3 | 7 | | 329 | A | |
| | NORTHWEST | 4 | 13 | 8 | 13 | 1364 | A | 4 | 13 | 8 | 13 | 40 | 236 | A | | 4 | 8 | | 240 | A | |
| ***Eleventh Ave @ 30th St*** | NORTHEAST | 1 | 15 | 5 | 15 | 594 | A | 1 | 15 | 5 | 15 | 40 | 152 | A | | 1 | 5 | | 152 | A | |
| | SOUTHEAST | 2 | 15 | 6 | 15 | 817 | A | 2 | 20 | 6 | 15 | 40 | 122 | B | | 2 | 6 | | 122 | B | |
| | SOUTHWEST | 3 | 13 | 7 | 13 | 1025 | A | 3 | 13 | 7 | 13 | 40 | 156 | A | | 3 | 7 | | 156 | A | |
| | NORTHWEST | 4 | 13 | 8 | 13 | 642 | A | 4 | 13 | 8 | 13 | 40 | 124 | B | | 4 | 8 | | 124 | B | |
| ***Eleventh Ave @ 33rd St*** | NORTHEAST | 1 | 15 | 5 | 15 | 443 | A | 1 | 15 | 5 | 20 | 25 | 184 | A | | 1 | 5 | 27 | 184 | A | |
| | SOUTHEAST | 2 | 15 | 6 | 15 | 940 | A | 2 | 20 | 6 | 15 | 55 | 131 | A | | 2 | 6 | 53 | 131 | A | |
| | SOUTHWEST | 3 | 13 | 7 | 13 | 4118 | A | 3 | 18 | 7 | | 25 | N/A | N/A | | 3 | 7 | 27 | N/A | N/A | |
| | NORTHWEST | 4 | 13 | 8 | 13 | 4112 | A | 4 | 13 | 8 | | 55 | N/A | N/A | | 4 | 8 | 53 | N/A | N/A | |
| ***Eleventh Ave @ 34th St*** | NORTHEAST | 1 | 15 | 5 | 15 | 350 | A | 1 | 15 | 5 | 20 | 24 | 184 | A | | 1 | 5 | 21 | 180 | A | |
| | SOUTHEAST | 2 | 12 | 6 | 15 | 458 | A | 2 | 17 | 6 | 15 | 56 | 187 | A | | 2 | 6 | 38 | 184 | A | |
| | SOUTHWEST | 3 | 20 | 7 | 20 | 519 | A | 3 | 30 | 7 | 20 | 24 | 79 | B | | 3 | 7 | 21 | 76 | B | |
| | NORTHWEST | 4 | 20 | 8 | 20 | 478 | A | 4 | 30 | 8 | 20 | 56 | 99 | B | | 4 | 8 | 38 | 96 | B | |
| ***Eleventh Ave @ 35th St*** | NORTHEAST | 1 | 19 | 5 | 11 | 1082 | A | 1 | 19 | 5 | 16 | 40 | 250 | A | | 1 | 5 | 45 | 249 | A | |
| | SOUTHEAST | 2 | 15 | 6 | 15 | 837 | A | 2 | 15 | 6 | 15 | 40 | 169 | A | | 2 | 6 | 35 | 168 | A | |
| | SOUTHWEST | 3 | 14 | 7 | | N/A | N/A | 3 | 24 | 7 | | 40 | N/A | N/A | | 3 | 7 | 45 | N/A | N/A | |
| | NORTHWEST | 4 | 14 | 8 | | N/A | N/A | 4 | 19 | 8 | | 40 | N/A | N/A | | 4 | 8 | 35 | N/A | N/A | |
| ***Eleventh Ave @ 36th St*** | NORTHEAST | 1 | 15 | 5 | 15 | 588 | A | 1 | 15 | 5 | 20 | 22 | 164 | A | | 1 | 5 | | 164 | A | |
| | SOUTHEAST | 2 | 9 | 6 | 17 | 640 | A | 2 | 15 | 6 | 17 | 22 | 122 | B | | 2 | 6 | | 122 | B | |
| | SOUTHWEST | 3 | 13 | 7 | | N/A | N/A | 3 | 22 | 7 | | 22 | N/A | N/A | | 3 | 7 | | N/A | N/A | |
| | NORTHWEST | 4 | 10 | 8 | | N/A | N/A | 4 | 18 | 8 | | 22 | N/A | N/A | | 4 | 8 | | N/A | N/A | |

# Appendix S.5.4

**Pedestrian Improvement Analysis - Corner Level of Service**

**2025 Future Conditions (PM)**

| Intersection | Corner Location | 2025 Future without the Proposed Action | | | | | | 2025 Future with the Proposed Action | | | | | | | | 2025 Future with the Proposed Action (Improvement) | | | | | |
|---|---|---|---|---|---|---|---|---|---|---|---|---|---|---|---|---|---|---|---|---|---|
| | | Sidewalk Width for No Build Condition | | | | Pedestrian Flow Rate (s.f./ped.) | Level of Service | Sidewalk Width for Build Condition | | | | Signal Timing | Pedestrian Flow Rate (s.f./ped.) | Level of Service | Impact? | Proposed Sidewalk Width Improvement | | Signal Timing | Pedestrian Flow Rate (s.f./ped.) | Level of Service | Still Impact? |
| ***Eleventh Ave @ 37th St*** | NORTHEAST | 1 | 15 | 5 | 10 | 471 | A | 1 | 15 | 5 | 15 | 22 | 151 | A | | 1 | 5 | 47 | 149 | A | |
| | SOUTHEAST | 2 | 10 | 6 | 15 | 570 | A | 2 | 15 | 6 | 15 | 58 | 116 | B | | 2 | 6 | 33 | 107 | B | |
| | SOUTHWEST | 3 | 12 | 7 | | N/A | N/A | 3 | 22 | 7 | | 22 | N/A | N/A | | 3 | 7 | 47 | N/A | N/A | |
| | NORTHWEST | 4 | 12 | 8 | | N/A | N/A | 4 | 17 | 8 | | 58 | N/A | N/A | | 4 | 8 | 33 | N/A | N/A | |
| ***Eleventh Ave @ 38th St*** | NORTHEAST | 1 | 15 | 5 | 10 | 3458 | A | 1 | 15 | 5 | 15 | 22 | 198 | A | | 1 | 5 | | 198 | A | |
| | SOUTHEAST | 2 | 10 | 6 | 15 | 1231 | A | 2 | 15 | 6 | 15 | 22 | 111 | B | | 2 | 6 | | 111 | B | |
| | SOUTHWEST | 3 | 11 | 7 | | N/A | N/A | 3 | 22 | 7 | | 22 | N/A | N/A | | 3 | 7 | | N/A | N/A | |
| | NORTHWEST | 4 | 11 | 8 | | N/A | N/A | 4 | 17 | 8 | | 22 | N/A | N/A | | 4 | 8 | | N/A | N/A | |
| ***Eleventh Ave @ 39th St*** | NORTHEAST | 1 | 14 | 5 | 10 | 1921 | A | 1 | 14 | 5 | 15 | 31 | 97 | B | | 1 | 5 | | 97 | B | |
| | SOUTHEAST | 2 | 10 | 6 | 15 | 295 | A | 2 | 15 | 6 | 15 | 49 | 103 | B | | 2 | 6 | | 103 | B | |
| | SOUTHWEST | 3 | 12 | 7 | 13 | 616 | A | 3 | 12 | 7 | | 31 | N/A | N/A | | 3 | 7 | | N/A | N/A | |
| | NORTHWEST | 4 | 11 | 8 | 15 | 3353 | A | 4 | 18 | 8 | | 49 | N/A | N/A | | 4 | 8 | | N/A | N/A | |
| ***Eleventh Ave @ 40th St*** | NORTHEAST | 1 | 15 | 5 | 10 | 4588 | A | 1 | 15 | 5 | 15 | 22 | 93 | B | | 1 | 5 | | 93 | B | |
| | SOUTHEAST | 2 | 10 | 6 | 15 | 819 | A | 2 | 15 | 6 | 15 | 22 | 117 | B | | 2 | 6 | | 117 | B | |
| | SOUTHWEST | 3 | 13 | 7 | 13 | 835 | A | 3 | 18 | 7 | | 22 | N/A | N/A | | 3 | 7 | | N/A | N/A | |
| | NORTHWEST | 4 | 13 | 8 | 13 | 1568 | A | 4 | 18 | 8 | | 22 | N/A | N/A | | 4 | 8 | | N/A | N/A | |
| ***Eleventh Ave @ 42nd St*** | NORTHEAST | 1 | 16 | 5 | 16 | 160 | A | 1 | 16 | 5 | 16 | 33 | 77 | B | | 1 | 5 | 35 | 77 | B | |
| | SOUTHEAST | 2 | 16 | 6 | 15 | 217 | A | 2 | 16 | 6 | 15 | 35 | 42 | B | | 2 | 6 | 31 | 43 | B | |
| | SOUTHWEST | 3 | 15 | 7 | 16 | 177 | A | 3 | 15 | 7 | 16 | 33 | 59 | B | | 3 | 7 | 35 | 59 | B | |
| | NORTHWEST | 4 | 15 | 8 | 16 | 149 | A | 4 | 15 | 8 | 16 | 35 | 88 | B | | 4 | 8 | 31 | 88 | B | |
| ***Tenth Ave @ 29th St*** | NORTHEAST | 1 | 15 | 5 | 15 | 269 | A | 1 | 15 | 5 | 15 | 30 | 144 | A | | 1 | 5 | | 144 | A | |
| | SOUTHEAST | 2 | 15 | 6 | 15 | 213 | A | 2 | 15 | 6 | 15 | 50 | 133 | A | | 2 | 6 | | 133 | A | |
| | SOUTHWEST | 3 | 13 | 7 | 13 | 154 | A | 3 | 13 | 7 | 13 | 30 | 73 | B | | 3 | 7 | | 73 | B | |
| | NORTHWEST | 4 | 13 | 8 | 13 | 169 | A | 4 | 13 | 8 | 13 | 50 | 73 | B | | 4 | 8 | | 73 | B | |
| ***Tenth Ave @ 30th St*** | NORTHEAST | 1 | 16 | 5 | 15 | 285 | A | 1 | 16 | 5 | 15 | 30 | 82 | B | | 1 | 5 | 32 | 82 | B | |
| | SOUTHEAST | 2 | 15 | 6 | 15 | 409 | A | 2 | 15 | 6 | 15 | 50 | 153 | A | | 2 | 6 | 48 | 154 | A | |
| | SOUTHWEST | 3 | 13 | 7 | 14 | 275 | A | 3 | 13 | 7 | 14 | 30 | 82 | B | | 3 | 7 | 32 | 82 | B | |
| | NORTHWEST | 4 | 15 | 8 | 14 | 231 | A | 4 | 15 | 8 | 14 | 50 | 61 | B | | 4 | 8 | 48 | 61 | B | |
| ***Tenth Ave @ 31st St*** | NORTHEAST | 1 | 15 | 5 | 15 | 393 | A | 1 | 15 | 5 | 15 | 30 | 44 | B | | 1 | 5 | 43 | 43 | B | |
| | SOUTHEAST | 2 | 15 | 6 | 15 | 421 | A | 2 | 15 | 6 | 15 | 50 | 108 | B | | 2 | 6 | 37 | 108 | B | |
| | SOUTHWEST | 3 | 13 | 7 | | N/A | N/A | 3 | 13 | 7 | | 30 | N/A | N/A | | 3 | 7 | 43 | N/A | N/A | |
| | NORTHWEST | 4 | 13 | 8 | | N/A | N/A | 4 | 13 | 8 | | 50 | N/A | N/A | | 4 | 8 | 37 | N/A | N/A | |
| ***Tenth Ave @ 33rd St*** | NORTHEAST | 1 | 15 | 5 | 15 | 303 | A | 1 | 15 | 5 | 15 | 32 | 14 | E | Yes | 1 | 5 | 34 | 14 | E | Yes |
| | SOUTHEAST | 2 | 15 | 6 | 15 | 207 | A | 2 | 15 | 6 | 15 | 48 | 9 | E | Yes | 2 | 6 | 46 | 10 | E | Yes |
| | SOUTHWEST | 3 | 13 | 7 | 13 | 203 | A | 3 | 13 | 7 | 13 | 32 | 1 | F | Yes | 3 | 7 | 34 | 1 | F | Yes |
| | NORTHWEST | 4 | 13 | 8 | 13 | 304 | A | 4 | 13 | 8 | 18 | 48 | 13 | E | Yes | 4 | 8 | 46 | 13 | E | Yes |
| ***Tenth Ave @ 34th St*** | NORTHEAST | 1 | 15 | 5 | 15 | 216 | A | 1 | 15 | 5 | 15 | 30 | 25 | C | | 1 | 5 | 42 | 24 | C | |
| | SOUTHEAST | 2 | 15 | 6 | 15 | 189 | A | 2 | 15 | 6 | 15 | 50 | 19 | D | | 2 | 6 | 38 | 19 | D | |
| | SOUTHWEST | 3 | 20 | 7 | 20 | 216 | A | 3 | 20 | 7 | 30 | 30 | 21 | D | | 3 | 7 | 42 | 25 | C | |
| | NORTHWEST | 4 | 20 | 8 | 20 | 222 | A | 4 | 20 | 8 | 30 | 50 | 33 | C | | 4 | 8 | 38 | 35 | C | |
| ***Tenth Ave @ 35th St*** | NORTHEAST | 1 | 16 | 5 | 15 | 343 | A | 1 | 16 | 5 | 15 | 30 | 45 | B | | 1 | 5 | | 45 | B | |
| | SOUTHEAST | 2 | 15 | 6 | 15 | 275 | A | 2 | 15 | 6 | 15 | 50 | 22 | D | | 2 | 6 | | 22 | D | |
| | SOUTHWEST | 3 | 15 | 7 | 13 | 362 | A | 3 | 15 | 7 | 18 | 30 | 38 | C | | 3 | 7 | | 38 | C | |
| | NORTHWEST | 4 | 9 | 8 | 14 | 336 | A | 4 | 9 | 8 | 24 | 50 | 60 | B | | 4 | 8 | | 60 | B | |

# Appendix S.5.4

**Pedestrian Improvement Analysis - Corner Level of Service**

**2025 Future Conditions (PM)**

| Intersection | Corner Location | 2025 Future without the Proposed Action | | | | | 2025 Future with the Proposed Action | | | | | | | 2025 Future with the Proposed Action (Improvement) | | | | | |
|---|---|---|---|---|---|---|---|---|---|---|---|---|---|---|---|---|---|---|---|
| | | Sidewalk Width for No Build Condition | | | | Pedestrian Flow Rate (s.f./ped.) | Level of Service | Sidewalk Width for Build Condition | | | | Signal Timing | Pedestrian Flow Rate (s.f./ped.) | Level of Service | Impact? | Proposed Sidewalk Width Improvement | | Signal Timing | Pedestrian Flow Rate (s.f./ped.) | Level of Service | Still Impact? |
| ***Tenth Ave @ 36th St*** | NORTHEAST | 1 | 15 | 5 | 15 | 485 | A | 1 | 15 | 5 | 15 | 30 | 58 | B | | 1 | 5 | | 58 | B | |
| | SOUTHEAST | 2 | 16 | 6 | 15 | 246 | A | 2 | 16 | 6 | 15 | 50 | 54 | B | | 2 | 6 | | 54 | B | |
| | SOUTHWEST | 3 | 12 | 7 | 12 | 192 | A | 3 | 12 | 7 | 18 | 30 | 66 | B | | 3 | 7 | | 66 | B | |
| | NORTHWEST | 4 | 12 | 8 | 12 | 314 | A | 4 | 12 | 8 | 22 | 50 | 81 | B | | 4 | 8 | | 81 | B | |
| ***Tenth Ave @ 37th St*** | NORTHEAST | 1 | 15 | 5 | 15 | 384 | A | 1 | 15 | 5 | 15 | 32 | 42 | B | | 1 | 5 | 35 | 42 | B | |
| | SOUTHEAST | 2 | 15 | 6 | 15 | 582 | A | 2 | 15 | 6 | 15 | 48 | 41 | B | | 2 | 6 | 45 | 41 | B | |
| | SOUTHWEST | 3 | 12 | 7 | 12 | 575 | A | 3 | 12 | 7 | 17 | 32 | 53 | B | | 3 | 7 | 35 | 53 | B | |
| | NORTHWEST | 4 | 12 | 8 | 12 | 475 | A | 4 | 12 | 8 | 22 | 48 | 87 | B | | 4 | 8 | 45 | 88 | B | |
| ***Tenth Ave @ 38th St*** | NORTHEAST | 1 | 15 | 5 | 15 | 599 | A | 1 | 15 | 5 | 15 | 30 | 48 | B | | 1 | 5 | | 48 | B | |
| | SOUTHEAST | 2 | 15 | 6 | 15 | 575 | A | 2 | 15 | 6 | 15 | 50 | 51 | B | | 2 | 6 | | 51 | B | |
| | SOUTHWEST | 3 | 12 | 7 | 12 | 606 | A | 3 | 12 | 7 | 17 | 30 | 69 | B | | 3 | 7 | | 69 | B | |
| | NORTHWEST | 4 | 12 | 8 | 12 | 663 | A | 4 | 12 | 8 | 22 | 50 | 90 | B | | 4 | 8 | | 90 | B | |
| ***Tenth Ave @ 39th St*** | NORTHEAST | 1 | 15 | 5 | 15 | 455 | A | 1 | 15 | 5 | 15 | 35 | 44 | B | | 1 | 5 | 33 | 44 | B | |
| | SOUTHEAST | 2 | 15 | 6 | 15 | 362 | A | 2 | 15 | 6 | 15 | 45 | 35 | C | | 2 | 6 | 47 | 35 | C | |
| | SOUTHWEST | 3 | 12 | 7 | 13 | 418 | A | 3 | 12 | 7 | 18 | 35 | 62 | B | | 3 | 7 | 33 | 61 | B | |
| | NORTHWEST | 4 | 12 | 8 | 10 | 361 | A | 4 | 12 | 8 | 10 | 45 | 25 | C | | 4 | 8 | 47 | 25 | C | |
| ***Tenth Ave @ 40th St*** | NORTHEAST | 1 | 15 | 5 | 15 | 383 | A | 1 | 15 | 5 | 15 | 36 | 30 | C | | 1 | 5 | 31 | 31 | C | |
| | SOUTHEAST | 2 | 15 | 6 | 15 | 638 | A | 2 | 15 | 6 | 15 | 44 | 44 | B | | 2 | 6 | 49 | 46 | B | |
| | SOUTHWEST | 3 | 12 | 7 | 13 | 858 | A | 3 | 12 | 7 | 13 | 36 | 58 | B | | 3 | 7 | 31 | 60 | B | |
| | NORTHWEST | 4 | 12 | 8 | 13 | 605 | A | 4 | 12 | 8 | 18 | 44 | 68 | B | | 4 | 8 | 49 | 68 | B | |
| ***Tenth Ave @ 41st St*** | NORTHEAST | 1 | 15 | 5 | 16 | 191 | A | 1 | 15 | 5 | 16 | 45 | 50 | B | | 1 | 5 | 35 | 50 | B | |
| | SOUTHEAST | 2 | 16 | 6 | 10 | 496 | A | 2 | 16 | 6 | 10 | 35 | 34 | C | | 2 | 6 | 45 | 34 | C | |
| | SOUTHWEST | 3 | 10 | 7 | 17 | 518 | A | 3 | 10 | 7 | 17 | 45 | 24 | C | | 3 | 7 | 35 | 23 | D | |
| | NORTHWEST | 4 | 14 | 8 | 12 | 271 | A | 4 | 14 | 8 | 12 | 35 | 68 | B | | 4 | 8 | 45 | 69 | B | |
| ***Tenth Ave @ 42nd St*** | NORTHEAST | 1 | 20 | 5 | 16 | 182 | A | 1 | 20 | 5 | 16 | 28 | 118 | B | | 1 | 5 | | 118 | B | |
| | SOUTHEAST | 2 | 22 | 6 | 16 | 154 | A | 2 | 22 | 6 | 16 | 52 | 39 | C | | 2 | 6 | | 39 | C | |
| | SOUTHWEST | 3 | 21 | 7 | 15 | 169 | A | 3 | 21 | 7 | 15 | 28 | 43 | B | | 3 | 7 | | 43 | B | |
| | NORTHWEST | 4 | 20 | 8 | 15 | 117 | B | 4 | 20 | 8 | 15 | 52 | 75 | B | | 4 | 8 | | 75 | B | |
| ***Dyer @ 42nd St*** | NORTHEAST | 1 | | 5 | 6 | N/A | N/A | 1 | | 5 | 6 | 34 | N/A | N/A | | 1 | 5 | | N/A | N/A | |
| | SOUTHEAST | 2 | | 6 | 4 | 27 | C | 2 | | 6 | 4 | 46 | 30 | C | | 2 | 6 | | 30 | C | |
| | SOUTHWEST | 3 | 21 | 7 | 20 | 64 | B | 3 | 21 | 7 | 20 | 34 | 69 | B | | 3 | 7 | | 69 | B | |
| | NORTHWEST | 4 | 20 | 8 | 21 | N/A | N/A | 4 | 20 | 8 | 21 | 46 | N/A | N/A | | 4 | 8 | | N/A | N/A | |
| ***Ninth Ave @ 30th St*** | NORTHEAST | 1 | 16 | 5 | 16 | 125 | B | 1 | 16 | 5 | 16 | 36 | 74 | B | | 1 | 5 | | 74 | B | |
| | SOUTHEAST | 2 | 15 | 6 | 16 | 137 | A | 2 | 15 | 6 | 16 | 44 | 89 | B | | 2 | 6 | | 89 | B | |
| | SOUTHWEST | 3 | 13 | 7 | 14 | 157 | A | 3 | 13 | 7 | 14 | 36 | 101 | B | | 3 | 7 | | 101 | B | |
| | NORTHWEST | 4 | 13 | 8 | 12 | 173 | A | 4 | 13 | 8 | 12 | 44 | 92 | B | | 4 | 8 | | 92 | B | |
| ***Ninth Ave @ 31st St*** | NORTHEAST | 1 | 15 | 5 | 15 | 40 | B | 1 | 20 | 5 | 15 | 30 | 24 | C | | 1 | 5 | 35 | 24 | C | |
| | SOUTHEAST | 2 | 13 | 6 | 15 | 69 | B | 2 | 13 | 6 | 15 | 50 | 48 | B | | 2 | 6 | 45 | 48 | B | |
| | SOUTHWEST | 3 | 13 | 7 | 13 | 117 | B | 3 | 13 | 7 | 13 | 30 | 63 | B | | 3 | 7 | 35 | 63 | B | |
| | NORTHWEST | 4 | 13 | 8 | 13 | 55 | B | 4 | 13 | 8 | 13 | 50 | 32 | C | | 4 | 8 | 45 | 33 | C | |
| ***Ninth Ave @ 33rd St*** | NORTHEAST | 1 | 15 | 5 | 15 | 34 | C | 1 | 15 | 5 | 15 | 30 | 13 | E | Yes | 1 | 5 | 35 | 13 | E | Yes |
| | SOUTHEAST | 2 | 15 | 6 | 15 | 18 | D | 2 | 15 | 6 | 20 | 50 | 6 | E | Yes | 2 | 6 | 45 | 6 | E | Yes |
| | SOUTHWEST | 3 | 13 | 7 | 13 | 15 | D | 3 | 13 | 7 | 18 | 30 | 12 | E | Yes | 3 | 7 | 35 | 13 | E | Yes |
| | NORTHWEST | 4 | 13 | 8 | 13 | 47 | B | 4 | 13 | 8 | 13 | 50 | 10 | E | Yes | 4 | 8 | 45 | 10 | E | Yes |

# Appendix S.5.4

**Pedestrian Improvement Analysis - Corner Level of Service**

**2025 Future Conditions (PM)**

| Intersection | Corner Location | 2025 Future without the Proposed Action | | | | | 2025 Future with the Proposed Action | | | | | | | 2025 Future with the Proposed Action (Improvement) | | | | | |
|---|---|---|---|---|---|---|---|---|---|---|---|---|---|---|---|---|---|---|---|
| | | Sidewalk Width for No Build Condition | | | | Pedestrian Flow Rate (s.f./ped.) | Level of Service | Sidewalk Width for Build Condition | | | | Signal Timing | Pedestrian Flow Rate (s.f./ped.) | Level of Service | Impact? | Proposed Sidewalk Width Improvement | | Signal Timing | Pedestrian Flow Rate (s.f./ped.) | Level of Service | Still Impact? |
| ***Ninth Ave @ 34th St*** | NORTHEAST | 1 | 15 | 5 | 15 | 39 | C | 1 | 15 | 5 | 15 | 30 | 24 | C | | 1 | 5 | 39 | 23 | D | |
| | SOUTHEAST | 2 | 15 | 6 | 15 | 49 | B | 2 | 15 | 6 | 15 | 35 | 25 | C | | 2 | 6 | 24 | 24 | C | |
| | SOUTHWEST | 3 | 23 | 7 | 20 | 43 | B | 3 | 23 | 7 | 20 | 30 | 13 | E | Yes | 3 | 7 | 39 | 14 | E | Yes |
| | NORTHWEST | 4 | 23 | 8 | 20 | 31 | C | 4 | 23 | 8 | 20 | 35 | 12 | E | Yes | 4 | 8 | 24 | 14 | E | Yes |
| ***Ninth Ave @ 37th St*** | NORTHEAST | 1 | 15 | 5 | 15 | 64 | B | 1 | 15 | 5 | 15 | 30 | 34 | C | | 1 | 5 | | 34 | C | |
| | SOUTHEAST | 2 | 15 | 6 | 15 | 66 | B | 2 | 15 | 6 | 15 | 50 | 37 | C | | 2 | 6 | | 37 | C | |
| | SOUTHWEST | 3 | 12 | 7 | 12 | 72 | B | 3 | 12 | 7 | 12 | 30 | 38 | C | | 3 | 7 | | 38 | C | |
| | NORTHWEST | 4 | 12 | 8 | 12 | 51 | B | 4 | 12 | 8 | 12 | 50 | 27 | C | | 4 | 8 | | 27 | C | |
| ***Ninth Ave @ 38th St*** | NORTHEAST | 1 | 15 | 5 | 15 | 95 | B | 1 | 15 | 5 | 15 | 30 | 40 | B | | 1 | 5 | | 40 | B | |
| | SOUTHEAST | 2 | 15 | 6 | 15 | 99 | B | 2 | 15 | 6 | 15 | 50 | 38 | C | | 2 | 6 | | 38 | C | |
| | SOUTHWEST | 3 | 11 | 7 | 11 | 190 | A | 3 | 11 | 7 | 11 | 30 | 62 | B | | 3 | 7 | | 62 | B | |
| | NORTHWEST | 4 | 11 | 8 | 11 | 172 | A | 4 | 11 | 8 | 11 | 50 | 62 | B | | 4 | 8 | | 62 | B | |
| ***Ninth Ave @ 39th St*** | NORTHEAST | 1 | 15 | 5 | 15 | 63 | B | 1 | 15 | 5 | 15 | 30 | 37 | C | | 1 | 5 | | 37 | C | |
| | SOUTHEAST | 2 | 15 | 6 | 15 | 60 | B | 2 | 15 | 6 | 15 | 50 | 32 | C | | 2 | 6 | | 32 | C | |
| | SOUTHWEST | 3 | 12 | 7 | 12 | 116 | B | 3 | 12 | 7 | 12 | 30 | 62 | B | | 3 | 7 | | 62 | B | |
| | NORTHWEST | 4 | 12 | 8 | 12 | 117 | B | 4 | 12 | 8 | 12 | 50 | 66 | B | | 4 | 8 | | 66 | B | |
| ***Ninth Ave @ 42nd St*** | NORTHEAST | 1 | 16 | 5 | 14 | 5 | F | 1 | 16 | 5 | 14 | 29 | 3 | F | Yes | 1 | 5 | 31 | 3 | F | Yes |
| | SOUTHEAST | 2 | 10 | 6 | 15 | 49 | B | 2 | 10 | 6 | 15 | 35 | 32 | C | | 2 | 6 | 34 | 32 | C | |
| | SOUTHWEST | 3 | 11 | 7 | 20 | 58 | B | 3 | 11 | 7 | 20 | 29 | 39 | C | | 3 | 7 | 31 | 39 | C | |
| | NORTHWEST | 4 | 19 | 8 | 21 | 51 | B | 4 | 19 | 8 | 21 | 35 | 41 | B | | 4 | 8 | 34 | 42 | B | |
| ***Eighth Ave @ 30th St*** | NORTHEAST | 1 | 14 | 5 | 15 | 65 | B | 1 | 14 | 5 | 15 | 38 | 38 | C | | 1 | 5 | 42 | 37 | C | |
| | SOUTHEAST | 2 | 15 | 6 | 14 | 89 | B | 2 | 15 | 6 | 14 | 42 | 54 | B | | 2 | 6 | 38 | 54 | B | |
| | SOUTHWEST | 3 | 13 | 7 | 14 | 113 | B | 3 | 13 | 7 | 14 | 38 | 78 | B | | 3 | 7 | 42 | 77 | B | |
| | NORTHWEST | 4 | 14 | 8 | 13 | 92 | B | 4 | 14 | 8 | 13 | 42 | 64 | B | | 4 | 8 | 38 | 63 | B | |
| ***Eighth Ave @ 31st St*** | NORTHEAST | 1 | 16 | 5 | 15 | 309 | A | 1 | 16 | 5 | 15 | 40 | 48 | B | | 1 | 5 | 38 | 48 | B | |
| | SOUTHEAST | 2 | 24 | 6 | 15 | 67 | B | 2 | 20 | 6 | 15 | 40 | 29 | C | | 2 | 6 | 42 | 30 | C | |
| | SOUTHWEST | 3 | 49 | 7 | 13 | 60 | B | 3 | 18 | 7 | 13 | 40 | 42 | B | | 3 | 7 | 38 | 42 | B | |
| | NORTHWEST | 4 | 14 | 8 | 24 | 79 | B | 4 | 14 | 8 | 24 | 40 | 67 | B | | 4 | 8 | 42 | 66 | B | |
| ***Eighth Ave @ 33rd St*** | NORTHEAST | 1 | 15 | 5 | 43 | 30 | C | 1 | 15 | 5 | 20 | 47 | 18 | D | | 1 | 5 | 40 | 19 | D | |
| | SOUTHEAST | 2 | 19 | 6 | 16 | 194 | A | 2 | 19 | 6 | 16 | 33 | 13 | E | Yes | 2 | 6 | 40 | 15 | D | |
| | SOUTHWEST | 3 | 17 | 7 | 24 | 21 | D | 3 | 17 | 7 | 24 | 47 | 17 | D | | 3 | 7 | 40 | 17 | D | |
| | NORTHWEST | 4 | 43 | 8 | 14 | 9 | E | 4 | 18 | 8 | 14 | 33 | 6 | E | Yes | 4 | 8 | 40 | 6 | E | Yes |
| ***Eighth Ave @ 34th St*** | NORTHEAST | 1 | 15 | 5 | 15 | 30 | C | 1 | 15 | 5 | 15 | 40 | 19 | D | | 1 | 5 | 29 | 17 | D | |
| | SOUTHEAST | 2 | 15 | 6 | 15 | 46 | B | 2 | 15 | 6 | 15 | 40 | 24 | C | | 2 | 6 | 35 | 22 | D | |
| | SOUTHWEST | 3 | 22 | 7 | 22 | 32 | C | 3 | 22 | 7 | 22 | 40 | 23 | D | | 3 | 7 | 29 | 20 | D | |
| | NORTHWEST | 4 | 22 | 8 | 22 | 23 | D | 4 | 22 | 8 | 22 | 40 | 16 | D | | 4 | 8 | 35 | 13 | E | Yes |
| ***Eighth Ave @ 37th St*** | NORTHEAST | 1 | 15 | 5 | 15 | 29 | C | 1 | 15 | 5 | 15 | 36 | 24 | C | | 1 | 5 | | 24 | C | |
| | SOUTHEAST | 2 | 15 | 6 | 15 | 26 | C | 2 | 15 | 6 | 15 | 44 | 20 | D | | 2 | 6 | | 20 | D | |
| | SOUTHWEST | 3 | 12 | 7 | 12 | 19 | D | 3 | 12 | 7 | 12 | 36 | 15 | D | | 3 | 7 | | 15 | D | |
| | NORTHWEST | 4 | 12 | 8 | 13 | 26 | C | 4 | 12 | 8 | 13 | 44 | 22 | D | | 4 | 8 | | 22 | D | |
| ***Eighth Ave @ 38th St*** | NORTHEAST | 1 | 15 | 5 | 15 | 278 | A | 1 | 15 | 5 | 15 | 38 | 120 | B | | 1 | 5 | | 120 | B | |
| | SOUTHEAST | 2 | 15 | 6 | 15 | 169 | A | 2 | 15 | 6 | 15 | 42 | 85 | B | | 2 | 6 | | 85 | B | |
| | SOUTHWEST | 3 | 12 | 7 | 11 | 84 | B | 3 | 12 | 7 | 11 | 38 | 46 | B | | 3 | 7 | | 46 | B | |
| | NORTHWEST | 4 | 12 | 8 | 11 | 97 | B | 4 | 12 | 8 | 11 | 42 | 50 | B | | 4 | 8 | | 50 | B | |

# Appendix S.5.4

**Pedestrian Improvement Analysis - Corner Level of Service**

**2025 Future Conditions (PM)**

| Intersection | Corner Location | 2025 Future without the Proposed Action | | | | | 2025 Future with the Proposed Action | | | | | | | 2025 Future with the Proposed Action (Improvement) | | | | | |
|---|---|---|---|---|---|---|---|---|---|---|---|---|---|---|---|---|---|---|---|
| | | Sidewalk Width for No Build Condition | | | | Pedestrian Flow Rate (s.f./ped.) | Level of Service | Sidewalk Width for Build Condition | | | Signal Timing | Pedestrian Flow Rate (s.f./ped.) | Level of Service | Impact? | Proposed Sidewalk Width Improvement | | Signal Timing | Pedestrian Flow Rate (s.f./ped.) | Level of Service | Still Impact? |
| ***Eighth Ave @ 39th St*** | NORTHEAST | 1 | 15 | 5 | 15 | 20 | D | 1 | 15 | 5 | 15 | 40 | 18 | D | | 1 | 5 | | 18 | D | |
| | SOUTHEAST | 2 | 15 | 6 | 15 | 16 | D | 2 | 15 | 6 | 15 | 40 | 14 | E | Yes | 2 | 6 | | 14 | E | Yes |
| | SOUTHWEST | 3 | 12 | 7 | 12 | 5 | F | 3 | 12 | 7 | 12 | 40 | 4 | F | Yes | 3 | 7 | | 4 | F | Yes |
| | NORTHWEST | 4 | 12 | 8 | 12 | 13 | E | 4 | 12 | 8 | 12 | 40 | 11 | E | Yes | 4 | 8 | | 11 | E | Yes |
| ***Eighth Ave @ 42nd St*** | NORTHEAST | 1 | 15 | 5 | 12 | 22 | D | 1 | 15 | 5 | 12 | 25 | 20 | D | | 1 | 5 | 30 | 21 | D | |
| | SOUTHEAST | 2 | 16 | 6 | 29 | -4 | F | 2 | 16 | 6 | 29 | 35 | -4 | F | | 2 | 6 | 38 | -2 | F | |
| | SOUTHWEST | 3 | 23 | 7 | 34 | 59 | B | 3 | 23 | 7 | 34 | 25 | 55 | B | | 3 | 7 | 30 | 56 | B | |
| | NORTHWEST | 4 | 16 | 8 | 20 | 5 | F | 4 | 16 | 8 | 20 | 35 | 5 | F | | 4 | 8 | 38 | 7 | E | |
| ***Seventh Ave @ 31st St*** | NORTHEAST | 1 | 23 | 5 | 20 | 28 | C | 1 | 23 | 5 | 20 | 38 | 24 | C | | 1 | 5 | 42 | 24 | C | |
| | SOUTHEAST | 2 | 23 | 6 | 20 | 28 | C | 2 | 23 | 6 | 20 | 42 | 26 | C | | 2 | 6 | 38 | 26 | C | |
| | SOUTHWEST | 3 | 13 | 7 | 13 | 27 | C | 3 | 13 | 7 | 13 | 38 | 24 | C | | 3 | 7 | 42 | 24 | C | |
| | NORTHWEST | 4 | 13 | 8 | 18 | 43 | B | 4 | 13 | 8 | 18 | 42 | 36 | C | | 4 | 8 | 38 | 36 | C | |
| ***Seventh Ave @ 33rd St*** | NORTHEAST | 1 | 20 | 5 | 20 | 17 | D | 1 | 20 | 5 | 20 | 22 | 15 | D | | 1 | 5 | 25 | 16 | D | |
| | SOUTHEAST | 2 | 20 | 6 | 40 | 16 | D | 2 | 20 | 6 | 40 | 58 | 14 | E | Yes | 2 | 6 | 55 | 14 | E | Yes |
| | SOUTHWEST | 3 | 13 | 7 | 40 | 176 | A | 3 | 13 | 7 | 40 | 22 | 144 | A | | 3 | 7 | 25 | 144 | A | |
| | NORTHWEST | 4 | 13 | 8 | 15 | 23 | D | 4 | 13 | 8 | 15 | 58 | 18 | D | | 4 | 8 | 55 | 19 | D | |
| ***Seventh Ave @ 34th St*** | NORTHEAST | 1 | 20 | 5 | 20 | 59 | B | 1 | 20 | 5 | 20 | 35 | 55 | B | | 1 | 5 | 38 | 55 | B | |
| | SOUTHEAST | 2 | 20 | 6 | 20 | 61 | B | 2 | 20 | 6 | 20 | 44 | 56 | B | | 2 | 6 | 41 | 56 | B | |
| | SOUTHWEST | 3 | 23 | 7 | 23 | 66 | B | 3 | 23 | 7 | 23 | 35 | 57 | B | | 3 | 7 | 38 | 57 | B | |
| | NORTHWEST | 4 | 23 | 8 | 23 | 53 | B | 4 | 23 | 8 | 23 | 44 | 49 | B | | 4 | 8 | 41 | 49 | B | |
| ***Sixth Ave @ 33rd St*** | NORTHEAST | 1 | 34 | 5 | 27 | 31 | C | 1 | 34 | 5 | 27 | 27 | 29 | C | | 1 | 5 | | 29 | C | |
| | SOUTHEAST | 2 | 28 | 6 | 24 | 23 | D | 2 | 28 | 6 | 24 | 90 | 20 | D | | 2 | 6 | | 20 | D | |
| | SOUTHWEST | 3 | 13 | 7 | 13 | 17 | D | 3 | 13 | 7 | 13 | 27 | 12 | E | Yes | 3 | 7 | | 12 | E | Yes |
| | NORTHWEST | 4 | 13 | 8 | 13 | 42 | B | 4 | 13 | 8 | 13 | 39 | 40 | B | | 4 | 8 | | 40 | B | |
| ***Sixth Ave @ 34th St*** | NORTHEAST | 1 | | 5 | 17 | 18 | D | 1 | | 5 | 17 | 27 | 17 | D | | 1 | 5 | | 17 | D | |
| | SOUTHEAST | 2 | 17 | 6 | | 20 | D | 2 | 17 | 6 | | 53 | 19 | D | | 2 | 6 | | 19 | D | |
| | SOUTHWEST | 3 | 23 | 7 | | N/A | N/A | 3 | 23 | 7 | | 27 | N/A | N/A | | 3 | 7 | | N/A | N/A | |
| | NORTHWEST | 4 | 23 | 8 | | N/A | N/A | 4 | 23 | 8 | | 53 | N/A | N/A | | 4 | 8 | | N/A | N/A | |
| ***Broadway @ 34th St*** | NORTHEAST | 1 | 30 | 5 | | N/A | N/A | 1 | 30 | 5 | | 27 | N/A | N/A | | 1 | 5 | | N/A | N/A | |
| | SOUTHEAST | 2 | | 6 | 30 | N/A | N/A | 2 | | 6 | 30 | 53 | N/A | N/A | | 2 | 6 | | N/A | N/A | |
| | SOUTHWEST | 3 | | 7 | 23 | 26 | C | 3 | | 7 | 23 | 27 | 25 | C | | 3 | 7 | | 25 | C | |
| | NORTHWEST | 4 | | 8 | 23 | 29 | C | 4 | | 8 | 23 | 53 | 28 | C | | 4 | 8 | | 28 | C | |
| ***Blvd @ 33rd St*** | NORTHEAST | | | | | N/A | N/A | 1 | 15 | 5 | | 30 | 19 | D | | 1 | 5 | 45 | 23 | D | |
| | SOUTHEAST | | | | | N/A | N/A | 2 | 18 | 6 | | 50 | N/A | N/A | | 2 | 6 | 45 | N/A | N/A | |
| | SOUTHWEST | | | | | N/A | N/A | 3 | 18 | 7 | 13 | 30 | N/A | N/A | | 3 | 7 | 45 | N/A | N/A | |
| | NORTHWEST | | | | | N/A | N/A | 4 | 13 | 8 | 18 | 50 | 12 | E | | 4 | 8 | 45 | 14 | E | |
| ***Blvd @ 34th St*** | NORTHEAST | | | | | N/A | N/A | 1 | 18 | 5 | 18 | 30 | 85 | B | | 1 | 5 | | 85 | B | |
| | SOUTHEAST | | | | | N/A | N/A | 2 | 18 | 6 | 18 | 50 | 72 | B | | 2 | 6 | | 72 | B | |
| | SOUTHWEST | | | | | N/A | N/A | 3 | 30 | 7 | 30 | 30 | 70 | B | | 3 | 7 | | 70 | B | |
| | NORTHWEST | | | | | N/A | N/A | 4 | 30 | 8 | 30 | 50 | 80 | B | | 4 | 8 | | 80 | B | |
| ***N.Blvd @ 35th St*** | NORTHEAST | | | | | N/A | N/A | 1 | | 5 | 18 | 40 | 62 | B | | 1 | 5 | | 62 | B | |
| | SOUTHEAST | | | | | N/A | N/A | 2 | 18 | 6 | 18 | 40 | 35 | C | | 2 | 6 | | 35 | C | |
| | SOUTHWEST | | | | | N/A | N/A | 3 | 24 | 7 | 18 | 40 | 71 | B | | 3 | 7 | | 71 | B | |
| | NORTHWEST | | | | | N/A | N/A | 4 | 18 | 8 | | 40 | N/A | N/A | | 4 | 8 | | N/A | N/A | |

# Appendix S.5.4

**Pedestrian Improvement Analysis - Corner Level of Service**

**2025 Future Conditions (PM)**

| Intersection | Corner Location | 2025 Future without the Proposed Action | | | | 2025 Future with the Proposed Action | | | | | | | | 2025 Future with the Proposed Action (Improvement) | | | | | |
|---|---|---|---|---|---|---|---|---|---|---|---|---|---|---|---|---|---|---|---|
| | | Sidewalk Width for No Build Condition | | Pedestrian Flow Rate (s.f./ped.) | Level of Service | Sidewalk Width for Build Condition | | | | Signal Timing | Pedestrian Flow Rate (s.f./ped.) | Level of Service | Impact? | Proposed Sidewalk Width Improvement | | | Signal Timing | Pedestrian Flow Rate (s.f./ped.) | Level of Service | Still Impact? |
| ***N.Blvd @ 36th St*** | NORTHEAST | | | N/A | N/A | 1 | 5 | 18 | | 40 | 141 | A | | 1 | 5 | | | 141 | A | |
| | SOUTHEAST | | | N/A | N/A | 2 | 18 | 6 | | 40 | 95 | B | | 2 | 6 | | | 95 | B | |
| | SOUTHWEST | | | N/A | N/A | 3 | 22 | 7 | | 40 | N/A | N/A | | 3 | 7 | | | N/A | N/A | |
| | NORTHWEST | | | N/A | N/A | 4 | 18 | 8 | | 40 | N/A | N/A | | 4 | 8 | | | N/A | N/A | |
| ***N.Blvd @ 37th St*** | NORTHEAST | | | N/A | N/A | 1 | 5 | 18 | | 32 | 133 | A | | 1 | 5 | | | 133 | A | |
| | SOUTHEAST | | | N/A | N/A | 2 | 18 | 6 | | 48 | 108 | B | | 2 | 6 | | | 108 | B | |
| | SOUTHWEST | | | N/A | N/A | 3 | 22 | 7 | | 32 | N/A | N/A | | 3 | 7 | | | N/A | N/A | |
| | NORTHWEST | | | N/A | N/A | 4 | 17 | 8 | | 48 | N/A | N/A | | 4 | 8 | | | N/A | N/A | |
| ***Blvd @ 38th St*** | NORTHEAST | | | N/A | N/A | 1 | 18 | 5 | 18 | 40 | 147 | A | | 1 | 5 | | | 147 | A | |
| | SOUTHEAST | | | N/A | N/A | 2 | 18 | 6 | 18 | 40 | 91 | B | | 2 | 6 | | | 91 | B | |
| | SOUTHWEST | | | N/A | N/A | 3 | 22 | 7 | 17 | 40 | 32 | C | | 3 | 7 | | | 32 | C | |
| | NORTHWEST | | | N/A | N/A | 4 | 17 | 8 | 22 | 40 | 60 | B | | 4 | 8 | | | 60 | B | |
| ***S.Blvd @ 35th St*** | NORTHEAST | | | N/A | N/A | 1 | 18 | 5 | | 30 | N/A | N/A | | 1 | 5 | | | N/A | N/A | |
| | SOUTHEAST | | | N/A | N/A | 2 | | 6 | | 50 | N/A | N/A | | 2 | 6 | | | N/A | N/A | |
| | SOUTHWEST | | | N/A | N/A | 3 | | 7 | 18 | 30 | N/A | N/A | | 3 | 7 | | | N/A | N/A | |
| | NORTHWEST | | | N/A | N/A | 4 | | 8 | 24 | 50 | 45 | B | | 4 | 8 | | | 45 | B | |
| ***S.Blvd @ 36th St*** | NORTHEAST | | | N/A | N/A | 1 | 18 | 5 | | 30 | N/A | N/A | | 1 | 5 | | | N/A | N/A | |
| | SOUTHEAST | | | N/A | N/A | 2 | | 6 | 18 | 50 | N/A | N/A | | 2 | 6 | | | N/A | N/A | |
| | SOUTHWEST | | | N/A | N/A | 3 | | 7 | 18 | 30 | 83 | B | | 3 | 7 | | | 83 | B | |
| | NORTHWEST | | | N/A | N/A | 4 | | 8 | 22 | 50 | 114 | B | | 4 | 8 | | | 114 | B | |
| ***S.Blvd @ 37th St*** | NORTHEAST | | | N/A | N/A | 1 | 18 | 5 | | 32 | N/A | N/A | | 1 | 5 | | | N/A | N/A | |
| | SOUTHEAST | | | N/A | N/A | 2 | | 6 | 18 | 48 | N/A | N/A | | 2 | 6 | | | N/A | N/A | |
| | SOUTHWEST | | | N/A | N/A | 3 | | 7 | 17 | 32 | 54 | B | | 3 | 7 | | | 54 | B | |
| | NORTHWEST | | | N/A | N/A | 4 | | 8 | 22 | 48 | 74 | B | | 4 | 8 | | | 74 | B | |

# Appendix S.5.4

**Pedestrian Improvement Analysis - Corner Level of Service**

**2025 Future Conditions (EVE)**

| Intersection | Corner Location | 2025 Future without the Proposed Action | | | | 2025 Future with the Proposed Action | | | | | | 2025 Future with the Proposed Action (Improvement) | | | | | |
|---|---|---|---|---|---|---|---|---|---|---|---|---|---|---|---|---|---|
| | | Sidewalk Width for No Build Condition | | Pedestrian Flow Rate (s.f./ped.) | Level of Service | Sidewalk Width for Build Condition | | Pedestrian Green | Pedestrian Flow Rate (s.f./ped.) | Level of Service | Impact? | Proposed Sidewalk Width | | Signal Timing | Pedestrian Flow Rate (s.f./ped.) | Level of Service | Still Impact? |
| ***Twelfth Ave @ 30th St*** | NORTHEAST | 1 15 | 5 15 | 2665 | A | 1 15 | 5 15 | 24 | 2665 | A | | 1 | 5 | | 8715 | A | |
| | SOUTHEAST | 2 11 | 6 15 | 7116 | A | 2 11 | 6 15 | 70 | 7116 | A | | 2 | 6 | | 7116 | A | |
| | SOUTHWEST | 3 13 | 7 | N/A | N/A | 3 13 | 7 | 24 | N/A | N/A | | 3 35 | 7 | | N/A | N/A | |
| | NORTHWEST | 4 13 | 8 | N/A | N/A | 4 13 | 8 | 70 | N/A | N/A | | 4 | 8 | | N/A | N/A | |
| ***Twelfth Ave @ 34th St*** | NORTHEAST | 1 15 | 5 12 | 5942 | A | 1 15 | 5 12 | 29 | 60 | B | | 1 | 5 | 11 | 67 | B | |
| | SOUTHEAST | 2 12 | 6 15 | 8306 | A | 2 12 | 6 15 | 60 | 28 | C | | 2 | 6 | 48 | 79 | B | |
| | SOUTHWEST | 3 18 | 7 | N/A | N/A | 3 18 | 7 | 29 | N/A | N/A | | 3 | 7 | 11 | N/A | N/A | |
| | NORTHWEST | 4 18 | 8 | N/A | N/A | 4 18 | 8 | 60 | N/A | N/A | | 4 | 8 | 48 | N/A | N/A | |
| ***Eleventh Ave @ 30th St*** | NORTHEAST | 1 15 | 5 15 | 2994 | A | 1 15 | 5 15 | 40 | 63 | B | | 1 | 5 | | 225 | A | |
| | SOUTHEAST | 2 15 | 6 15 | 4706 | A | 2 20 | 6 15 | 40 | 274 | A | | 2 | 6 | | 274 | A | |
| | SOUTHWEST | 3 13 | 7 13 | 4117 | A | 3 13 | 7 13 | 40 | 164 | A | | 3 35 | 7 | | 164 | A | |
| | NORTHWEST | 4 13 | 8 13 | 4701 | A | 4 13 | 8 13 | 40 | 48 | B | | 4 | 8 35 | | 157 | A | |
| ***Eleventh Ave @ 33rd St*** | NORTHEAST | 1 15 | 5 15 | 1433 | A | 1 15 | 5 20 | 25 | 51 | B | | 1 | 5 | | 51 | B | |
| | SOUTHEAST | 2 15 | 6 15 | 3657 | A | 2 20 | 6 15 | 55 | -3 | F | Yes | 2 | 6 | | 51 | B | |
| | SOUTHWEST | 3 13 | 7 13 | 4712 | A | 3 18 | 7 | 25 | N/A | N/A | | 3 | 7 | | N/A | N/A | |
| | NORTHWEST | 4 13 | 8 13 | 8231 | A | 4 13 | 8 | 55 | N/A | N/A | | 4 35 | 8 | | N/A | N/A | |
| ***Eleventh Ave @ 34th St*** | NORTHEAST | 1 15 | 5 15 | 1785 | A | 1 15 | 5 20 | 22 | 83 | B | | 1 | 5 | 30 | 72 | B | |
| | SOUTHEAST | 2 12 | 6 15 | 995 | A | 2 17 | 6 15 | 58 | 33 | C | | 2 | 6 | 30 | 37 | C | |
| | SOUTHWEST | 3 20 | 7 20 | 2343 | A | 3 30 | 7 20 | 22 | 14 | E | Yes | 3 | 7 | 30 | 19 | D | |
| | NORTHWEST | 4 20 | 8 20 | 2871 | A | 4 30 | 8 20 | 58 | 43 | B | | 4 | 8 | 30 | 30 | C | |
| ***Eleventh Ave @ 39th St*** | NORTHEAST | 1 14 | 5 10 | 3018 | A | 1 14 | 5 15 | 31 | 2470 | A | | 1 | 5 | | 2470 | A | |
| | SOUTHEAST | 2 10 | 6 15 | 1171 | A | 2 15 | 6 15 | 49 | 287 | A | | 2 | 6 | | 287 | A | |
| | SOUTHWEST | 3 12 | 7 13 | 1618 | A | 3 12 | 7 | 31 | N/A | N/A | | 3 | 7 | | N/A | N/A | |
| | NORTHWEST | 4 11 | 8 15 | 1435 | A | 4 18 | 8 | 49 | N/A | N/A | | 4 | 8 | | N/A | N/A | |
| ***Eleventh Ave @ 42nd St*** | NORTHEAST | 1 16 | 5 16 | 296 | A | 1 16 | 5 16 | 33 | 179 | A | | 1 | 5 | | 179 | A | |
| | SOUTHEAST | 2 16 | 6 15 | 424 | A | 2 16 | 6 15 | 35 | 215 | A | | 2 | 6 | | 215 | A | |
| | SOUTHWEST | 3 15 | 7 16 | 436 | A | 3 15 | 7 16 | 33 | 198 | A | | 3 | 7 | | 198 | A | |
| | NORTHWEST | 4 15 | 8 16 | 325 | A | 4 15 | 8 16 | 35 | 175 | A | | 4 | 8 | | 175 | A | |
| ***Tenth Ave @ 30th St*** | NORTHEAST | 1 16 | 5 15 | 1221 | A | 1 16 | 5 15 | 30 | 104 | B | | 1 | 5 | | 104 | B | |
| | SOUTHEAST | 2 15 | 6 15 | 1197 | A | 2 15 | 6 15 | 50 | 621 | A | | 2 | 6 | | 621 | A | |
| | SOUTHWEST | 3 13 | 7 14 | 874 | A | 3 13 | 7 14 | 30 | 416 | A | | 3 | 7 | | 416 | A | |
| | NORTHWEST | 4 15 | 8 14 | 975 | A | 4 15 | 8 14 | 50 | 76 | B | | 4 | 8 36 | | 221 | A | |
| ***Tenth Ave @ 31st St*** | NORTHEAST | 1 15 | 5 15 | 1849 | A | 1 15 | 5 15 | 30 | 28 | C | | 1 | 5 | | 24 | C | |
| | SOUTHEAST | 2 15 | 6 15 | 1579 | A | 2 15 | 6 15 | 50 | 88 | B | | 2 | 6 | 30 | 87 | B | |
| | SOUTHWEST | 3 13 | 7 | N/A | N/A | 3 13 | 7 | 30 | N/A | N/A | | 3 | 7 | | N/A | N/A | |
| | NORTHWEST | 4 13 | 8 | N/A | N/A | 4 13 | 8 | 50 | N/A | N/A | | 4 | 8 | 30 | N/A | N/A | |
| ***Tenth Ave @ 33rd St*** | NORTHEAST | 1 15 | 5 15 | 811 | A | 1 15 | 5 15 | 32 | 103 | B | | 1 | 5 | 31 | 102 | B | |
| | SOUTHEAST | 2 15 | 6 15 | 716 | A | 2 15 | 6 15 | 48 | -11 | F | Yes | 2 | 6 | 49 | 6 | E | Yes |
| | SOUTHWEST | 3 13 | 7 13 | 1047 | A | 3 13 | 7 13 | 32 | 9 | E | Yes | 3 | 7 35 | 31 | 28 | C | |
| | NORTHWEST | 4 13 | 8 13 | 1389 | A | 4 13 | 8 18 | 48 | 179 | A | | 4 35 | 8 | 49 | 179 | A | |
| ***Tenth Ave @ 34th St*** | NORTHEAST | 1 15 | 5 15 | 642 | A | 1 15 | 5 15 | 30 | 271 | A | | 1 | 5 | | 271 | A | |
| | SOUTHEAST | 2 15 | 6 15 | 434 | A | 2 15 | 6 15 | 50 | 119 | B | | 2 | 6 | | 119 | B | |
| | SOUTHWEST | 3 20 | 7 20 | 597 | A | 3 20 | 7 30 | 30 | 243 | A | | 3 | 7 | | 243 | A | |
| | NORTHWEST | 4 20 | 8 20 | 867 | A | 4 20 | 8 30 | 50 | 507 | A | | 4 | 8 | | 507 | A | |

# Appendix S.5.4

## Pedestrian Improvement Analysis - Corner Level of Service

### 2025 Future Conditions (EVE)

| Intersection | Corner Location | 2025 Future without the Proposed Action | | | | | | 2025 Future with the Proposed Action | | | | | | | | 2025 Future with the Proposed Action (Improvement) | | | | | |
|---|---|---|---|---|---|---|---|---|---|---|---|---|---|---|---|---|---|---|---|---|---|
| | | | Sidewalk Width for No Build Condition | | | Pedestrian Flow Rate (s.f./ped.) | Level of Service | | Sidewalk Width for Build Condition | | Pedestrian Green | Pedestrian Flow Rate (s.f./ped.) | Level of Service | Impact? | | Proposed Sidewalk Width | | Signal Timing | Pedestrian Flow Rate (s.f./ped.) | Level of Service | Still Impact? |
| ***Ninth Ave @ 30th St*** | NORTHEAST | 1 | 16 | 5 | 16 | 398 | A | 1 | 16 | 5 | 16 | 36 | 216 | A | | 1 | 5 | | 216 | A | |
| | SOUTHEAST | 2 | 15 | 6 | 16 | 449 | A | 2 | 15 | 6 | 16 | 44 | 303 | A | | 2 | 6 | | 303 | A | |
| | SOUTHWEST | 3 | 13 | 7 | 14 | 568 | A | 3 | 13 | 7 | 14 | 36 | 257 | A | | 3 | 7 | | 257 | A | |
| | NORTHWEST | 4 | 13 | 8 | 12 | 570 | A | 4 | 13 | 8 | 12 | 44 | 217 | A | | 4 | 8 | | 217 | A | |
| ***Ninth Ave @ 31st St*** | NORTHEAST | 1 | 15 | 5 | 15 | 310 | A | 1 | 20 | 5 | 15 | 30 | 30 | C | | 1 | 5 | | 30 | C | |
| | SOUTHEAST | 2 | 13 | 6 | 15 | 362 | A | 2 | 13 | 6 | 15 | 50 | 171 | A | | 2 | 6 | | 171 | A | |
| | SOUTHWEST | 3 | 13 | 7 | 13 | 653 | A | 3 | 13 | 7 | 13 | 30 | 147 | A | | 3 | 7 | | 147 | A | |
| | NORTHWEST | 4 | 13 | 8 | 13 | 494 | A | 4 | 13 | 8 | 13 | 50 | 51 | B | | 4 | 8 | | 51 | B | |
| ***Ninth Ave @ 33rd St*** | NORTHEAST | 1 | 15 | 5 | 15 | 207 | A | 1 | 15 | 5 | 15 | 30 | 29 | C | | 1 | 5 | | 29 | C | |
| | SOUTHEAST | 2 | 15 | 6 | 15 | 141 | A | 2 | 15 | 6 | 20 | 50 | -4 | F | Yes | 2 | 6 | | 32 | C | |
| | SOUTHWEST | 3 | 13 | 7 | 13 | 180 | A | 3 | 13 | 7 | 18 | 30 | 13 | E | Yes | 3 | 7 | 40 | 32 | C | |
| | NORTHWEST | 4 | 13 | 8 | 13 | 362 | A | 4 | 13 | 8 | 13 | 50 | 16 | D | | 4 | 35 8 | | 16 | D | |
| ***Ninth Ave @ 34th St*** | NORTHEAST | 1 | 15 | 5 | 15 | 234 | A | 1 | 15 | 5 | 15 | 25 | 78 | B | | 1 | 5 | 30 | 77 | B | |
| | SOUTHEAST | 2 | 15 | 6 | 15 | 228 | A | 2 | 15 | 6 | 15 | 40 | 72 | B | | 2 | 6 | 30 | 73 | B | |
| | SOUTHWEST | 3 | 23 | 7 | 20 | 305 | A | 3 | 23 | 7 | 20 | 25 | 50 | B | | 3 | 7 | 30 | 50 | B | |
| | NORTHWEST | 4 | 23 | 8 | 20 | 304 | A | 4 | 23 | 8 | 20 | 40 | 45 | B | | 4 | 8 | 30 | 41 | B | |
| ***Eighth Ave @ 30th St*** | NORTHEAST | 1 | 14 | 5 | 15 | 184 | A | 1 | 14 | 5 | 15 | 38 | 132 | A | | 1 | 5 | | 132 | A | |
| | SOUTHEAST | 2 | 15 | 6 | 14 | 272 | A | 2 | 15 | 6 | 14 | 42 | 203 | A | | 2 | 6 | | 203 | A | |
| | SOUTHWEST | 3 | 13 | 7 | 14 | 242 | A | 3 | 13 | 7 | 14 | 38 | 203 | A | | 3 | 7 | | 203 | A | |
| | NORTHWEST | 4 | 14 | 8 | 13 | 206 | A | 4 | 14 | 8 | 13 | 42 | 160 | A | | 4 | 8 | | 160 | A | |
| ***Eighth Ave @ 31st St*** | NORTHEAST | 1 | 16 | 5 | 15 | 503 | A | 1 | 16 | 5 | 15 | 40 | 87 | B | | 1 | 5 | | 87 | B | |
| | SOUTHEAST | 2 | 24 | 6 | 15 | 117 | B | 2 | 20 | 6 | 15 | 40 | 76 | B | | 2 | 6 | | 76 | B | |
| | SOUTHWEST | 3 | 49 | 7 | 13 | 104 | B | 3 | 18 | 7 | 13 | 40 | 84 | B | | 3 | 7 | | 84 | B | |
| | NORTHWEST | 4 | 14 | 8 | 24 | 209 | A | 4 | 14 | 8 | 24 | 40 | 134 | A | | 4 | 8 | | 134 | A | |
| ***Eighth Ave @ 33rd St*** | NORTHEAST | 1 | 15 | 5 | 43 | 78 | B | 1 | 15 | 5 | 20 | 47 | 52 | B | | 1 | 5 | 30 | 47 | B | |
| | SOUTHEAST | 2 | 19 | 6 | 16 | 464 | A | 2 | 19 | 6 | 16 | 33 | 62 | B | | 2 | 6 | 30 | 58 | B | |
| | SOUTHWEST | 3 | 17 | 7 | 24 | 58 | B | 3 | 17 | 7 | 24 | 47 | 51 | B | | 3 | 7 | 46 30 | 113 | B | |
| | NORTHWEST | 4 | 43 | 8 | 14 | 35 | C | 4 | 18 | 8 | 14 | 33 | 26 | C | | 4 | 8 | 30 | 24 | C | |
| ***Eighth Ave @ 34th St*** | NORTHEAST | 1 | 15 | 5 | 15 | 23 | D | 1 | 15 | 5 | 15 | 40 | 22 | D | | 1 | 5 | 30 | 20 | D | |
| | SOUTHEAST | 2 | 15 | 6 | 15 | 17 | D | 2 | 15 | 6 | 15 | 40 | 14 | E | Yes | 2 | 6 | 30 | 10 | E | Yes |
| | SOUTHWEST | 3 | 22 | 7 | 22 | 22 | D | 3 | 22 | 7 | 22 | 40 | 20 | D | | 3 | 7 | 30 | 17 | D | |
| | NORTHWEST | 4 | 22 | 8 | 22 | 77 | B | 4 | 22 | 8 | 22 | 40 | 70 | B | | 4 | 8 | 30 | 67 | B | |
| ***Sixth Ave @ 34th St*** | NORTHEAST | 1 | | 5 | 17 | 72 | B | 1 | | 5 | 17 | 27 | 72 | B | | 1 | 5 | | 72 | B | |
| | SOUTHEAST | 2 | 17 | 6 | | 66 | B | 2 | 17 | 6 | | 53 | 66 | B | | 2 | 6 | | 66 | B | |
| | SOUTHWEST | 3 | 23 | 7 | | N/A | N/A | 3 | 23 | 7 | | 27 | N/A | N/A | | 3 | 7 | | N/A | N/A | |
| | NORTHWEST | 4 | 23 | 8 | | N/A | N/A | 4 | 23 | 8 | | 53 | N/A | N/A | | 4 | 8 | | N/A | N/A | |
| ***Broadway @ 34th St*** | NORTHEAST | 1 | 30 | 5 | | N/A | N/A | 1 | 30 | 5 | | 27 | N/A | N/A | | 1 | 5 | | N/A | N/A | |
| | SOUTHEAST | 2 | | 6 | 30 | N/A | N/A | 2 | | 6 | 30 | 53 | N/A | N/A | | 2 | 6 | | N/A | N/A | |
| | SOUTHWEST | 3 | | 7 | 23 | 111 | B | 3 | | 7 | 23 | 27 | 110 | B | | 3 | 7 | | 110 | B | |
| | NORTHWEST | 4 | | 8 | 23 | 120 | B | 4 | | 8 | 23 | 53 | 120 | B | | 4 | 8 | | 120 | B | |

# Appendix S.5.4

**Pedestrian Improvement Analysis - Corner Level of Service**

**2025 Future Conditions (EVE)**

| Intersection | Corner Location | 2025 Future without the Proposed Action | | | | 2025 Future with the Proposed Action | | | | | | 2025 Future with the Proposed Action (Improvement) | | | | | |
|---|---|---|---|---|---|---|---|---|---|---|---|---|---|---|---|---|---|
| | | Sidewalk Width for No Build Condition | | Pedestrian Flow Rate (s.f./ped.) | Level of Service | Sidewalk Width for Build Condition | | Pedestrian Green | Pedestrian Flow Rate (s.f./ped.) | Level of Service | Impact? | Proposed Sidewalk Width | | Signal Timing | Pedestrian Flow Rate (s.f./ped.) | Level of Service | Still Impact? |
| ***Blvd @ 33rd St*** | NORTHEAST | | | N/A | N/A | 1 15 | 5 | 45 | 77 | B | | 1 | 5 | | 77 | B | |
| | SOUTHEAST | | | N/A | N/A | 2 18 | 6 | 45 | N/A | N/A | | 2 | 6 | | N/A | N/A | |
| | SOUTHWEST | | | N/A | N/A | 3 18 | 7 13 | 45 | N/A | N/A | | 3 | 7 35 | | N/A | N/A | |
| | NORTHWEST | | | N/A | N/A | 4 13 | 8 18 | 45 | 46 | B | | 4 35 | 8 | | 46 | B | |
| ***Blvd @ 34th St*** | NORTHEAST | | | N/A | N/A | 1 18 | 5 18 | 30 | 373 | A | | 1 | 5 | | 373 | A | |
| | SOUTHEAST | | | N/A | N/A | 2 18 | 6 18 | 32 | 283 | A | | 2 | 6 | | 283 | A | |
| | SOUTHWEST | | | N/A | N/A | 3 30 | 7 30 | 30 | 250 | A | | 3 | 7 | | 250 | A | |
| | NORTHWEST | | | N/A | N/A | 4 30 | 8 30 | 32 | 220 | A | | 4 | 8 | | 220 | A | |
| ***N.Blvd @ 35th St*** | NORTHEAST | | | N/A | N/A | 1 | 5 18 | 40 | 442 | A | | 1 | 5 | | 442 | A | |
| | SOUTHEAST | | | N/A | N/A | 2 18 | 6 18 | 40 | 113 | B | | 2 | 6 | | 113 | B | |
| | SOUTHWEST | | | N/A | N/A | 3 24 | 7 18 | 40 | 258 | A | | 3 | 7 | | 258 | A | |
| | NORTHWEST | | | N/A | N/A | 4 18 | 8 | 40 | N/A | N/A | | 4 | 8 | | N/A | N/A | |
| ***N.Blvd @ 36th St*** | NORTHEAST | | | N/A | N/A | 1 | 5 18 | 40 | 1413 | A | | 1 | 5 | | 1413 | A | |
| | SOUTHEAST | | | N/A | N/A | 2 18 | 6 | 40 | 197 | A | | 2 | 6 | | 197 | A | |
| | SOUTHWEST | | | N/A | N/A | 3 22 | 7 | 40 | N/A | N/A | | 3 | 7 | | N/A | N/A | |
| | NORTHWEST | | | N/A | N/A | 4 18 | 8 | 40 | N/A | N/A | | 4 | 8 | | N/A | N/A | |
| ***N.Blvd @ 37th St*** | NORTHEAST | | | N/A | N/A | 1 | 5 18 | 32 | 1125 | A | | 1 | 5 | | 1125 | A | |
| | SOUTHEAST | | | N/A | N/A | 2 18 | 6 | 48 | 1028 | A | | 2 | 6 | | 1028 | A | |
| | SOUTHWEST | | | N/A | N/A | 3 22 | 7 | 32 | N/A | N/A | | 3 | 7 | | N/A | N/A | |
| | NORTHWEST | | | N/A | N/A | 4 17 | 8 | 48 | N/A | N/A | | 4 | 8 | | N/A | N/A | |
| ***Blvd @ 38th St*** | NORTHEAST | | | N/A | N/A | 1 18 | 5 18 | 40 | 1177 | A | | 1 | 5 | | 1177 | A | |
| | SOUTHEAST | | | N/A | N/A | 2 18 | 6 18 | 40 | 690 | A | | 2 | 6 | | 690 | A | |
| | SOUTHWEST | | | N/A | N/A | 3 22 | 7 17 | 40 | 754 | A | | 3 | 7 | | 754 | A | |
| | NORTHWEST | | | N/A | N/A | 4 17 | 8 22 | 40 | 1177 | A | | 4 | 8 | | 1177 | A | |
| ***S.Blvd @ 35th St*** | NORTHEAST | | | N/A | N/A | 1 18 | 5 | 30 | N/A | N/A | | 1 | 5 | | N/A | N/A | |
| | SOUTHEAST | | | N/A | N/A | 2 | 6 | 50 | N/A | N/A | | 2 | 6 | | N/A | N/A | |
| | SOUTHWEST | | | N/A | N/A | 3 | 7 18 | 30 | N/A | N/A | | 3 | 7 | | N/A | N/A | |
| | NORTHWEST | | | N/A | N/A | 4 | 8 24 | 50 | 117 | B | | 4 | 8 | | 117 | B | |
| ***S.Blvd @ 36th St*** | NORTHEAST | | | N/A | N/A | 1 18 | 5 | 30 | N/A | N/A | | 1 | 5 | | N/A | N/A | |
| | SOUTHEAST | | | N/A | N/A | 2 | 6 18 | 50 | N/A | N/A | | 2 | 6 | | N/A | N/A | |
| | SOUTHWEST | | | N/A | N/A | 3 | 7 18 | 30 | 332 | A | | 3 | 7 | | 332 | A | |
| | NORTHWEST | | | N/A | N/A | 4 | 8 22 | 50 | 1233 | A | | 4 | 8 | | 1233 | A | |
| ***S.Blvd @ 37th St*** | NORTHEAST | | | N/A | N/A | 1 18 | 5 | 32 | N/A | N/A | | 1 | 5 | | N/A | N/A | |
| | SOUTHEAST | | | N/A | N/A | 2 | 6 18 | 48 | N/A | N/A | | 2 | 6 | | N/A | N/A | |
| | SOUTHWEST | | | N/A | N/A | 3 | 7 17 | 32 | 1153 | A | | 3 | 7 | | 1153 | A | |
| | NORTHWEST | | | N/A | N/A | 4 | 8 22 | 48 | 1196 | A | | 4 | 8 | | 1196 | A | |

# Appendix S.5.4

**Pedestrian Improvement Analysis - Corner Level of Service**

**2025 Future Conditions (SUN)**

| Intersection | Corner Location | 2025 Future without the Proposed Action | | | | | | 2025 Future with the Proposed Action | | | | | | | | 2025 Future with the Proposed Action (Improvement) | | | | | |
|---|---|---|---|---|---|---|---|---|---|---|---|---|---|---|---|---|---|---|---|---|---|
| | | Sidewalk Width for No Build Condition | | | | Pedestrian Flow Rate (s.f./ped.) | Level of Service | Sidewalk Width for Build Condition | | | | Pedestrian Green | Pedestrian Flow Rate (s.f./ped.) | Level of Service | Impact? | Proposed Sidewalk Width | | | Signal Timing | Pedestrian Flow Rate (s.f./ped.) | Level of Service | Still Impact? |
| ***Twelfth Ave @ 30th St*** | NORTHEAST | 1 | 15 | 5 | 15 | 2989 | A | 1 | 15 | 5 | 15 | 24 | 2989 | A | | 1 | | 5 | | 9795 | A | |
| | SOUTHEAST | 2 | 11 | 6 | 15 | 3956 | A | 2 | 11 | 6 | 15 | 70 | 3956 | A | | 2 | | 6 | | 3956 | A | |
| | SOUTHWEST | 3 | 13 | 7 | | N/A | N/A | 3 | 13 | 7 | | 24 | N/A | N/A | | 3 | 35 | 7 | | N/A | N/A | |
| | NORTHWEST | 4 | 13 | 8 | | N/A | N/A | 4 | 13 | 8 | | 70 | N/A | N/A | | 4 | | 8 | | N/A | N/A | |
| ***Twelfth Ave @ 34th St*** | NORTHEAST | 1 | 15 | 5 | 12 | 3782 | A | 1 | 15 | 5 | 12 | 29 | 67 | B | | 1 | | 5 | 31 | 67 | B | |
| | SOUTHEAST | 2 | 12 | 6 | 15 | 301 | A | 2 | 12 | 6 | 15 | 60 | -10 | F | Yes | 2 | | 6 | 53 | 34 | C | |
| | SOUTHWEST | 3 | 18 | 7 | | N/A | N/A | 3 | 18 | 7 | | 29 | N/A | N/A | | 3 | | 7 | 31 | N/A | N/A | |
| | NORTHWEST | 4 | 18 | 8 | | N/A | N/A | 4 | 18 | 8 | | 60 | N/A | N/A | | 4 | | 8 | 53 | N/A | N/A | |
| ***Eleventh Ave @ 30th St*** | NORTHEAST | 1 | 15 | 5 | 15 | 627 | A | 1 | 15 | 5 | 15 | 40 | 57 | B | | 1 | | 5 | | 184 | A | |
| | SOUTHEAST | 2 | 15 | 6 | 15 | 1092 | A | 2 | 20 | 6 | 15 | 40 | 95 | B | | 2 | | 6 | | 95 | B | |
| | SOUTHWEST | 3 | 13 | 7 | 13 | 1491 | A | 3 | 13 | 7 | 13 | 40 | 51 | B | | 3 | 35 | 7 | | 51 | B | |
| | NORTHWEST | 4 | 13 | 8 | 13 | 816 | A | 4 | 13 | 8 | 13 | 40 | 15 | D | | 4 | | 8 | 35 | 86 | B | |
| ***Eleventh Ave @ 33rd St*** | NORTHEAST | 1 | 15 | 5 | 15 | 353 | A | 1 | 15 | 5 | 20 | 25 | 64 | B | | 1 | | 5 | | 64 | B | |
| | SOUTHEAST | 2 | 15 | 6 | 15 | 763 | A | 2 | 20 | 6 | 15 | 55 | 15 | D | | 2 | | 6 | | 49 | B | |
| | SOUTHWEST | 3 | 13 | 7 | 13 | 4706 | A | 3 | 18 | 7 | | 25 | N/A | N/A | | 3 | | 7 | | N/A | N/A | |
| | NORTHWEST | 4 | 13 | 8 | 13 | 4113 | A | 4 | 13 | 8 | | 55 | N/A | N/A | | 4 | 35 | 8 | | N/A | N/A | |
| ***Eleventh Ave @ 34th St*** | NORTHEAST | 1 | 15 | 5 | 15 | 221 | A | 1 | 15 | 5 | 20 | 22 | 51 | B | | 1 | | 5 | 30 | 50 | B | |
| | SOUTHEAST | 2 | 12 | 6 | 15 | 314 | A | 2 | 17 | 6 | 15 | 58 | 33 | C | | 2 | | 6 | 30 | 26 | C | |
| | SOUTHWEST | 3 | 20 | 7 | 20 | 354 | A | 3 | 30 | 7 | 20 | 22 | -3 | F | Yes | 3 | | 7 | 30 | -6 | F | Yes |
| | NORTHWEST | 4 | 20 | 8 | 20 | 296 | A | 4 | 30 | 8 | 20 | 58 | 19 | D | | 4 | | 8 | 30 | 20 | D | |
| ***Eleventh Ave @ 39th St*** | NORTHEAST | 1 | 14 | 5 | 10 | 1510 | A | 1 | 14 | 5 | 15 | 31 | 59 | B | | 1 | | 5 | 50 | 49 | B | |
| | SOUTHEAST | 2 | 10 | 6 | 15 | 159 | A | 2 | 15 | 6 | 15 | 49 | 64 | B | | 2 | | 6 | 30 | 64 | B | |
| | SOUTHWEST | 3 | 12 | 7 | 13 | 279 | A | 3 | 12 | 7 | | 31 | N/A | N/A | | 3 | | 7 | 50 | N/A | N/A | |
| | NORTHWEST | 4 | 11 | 8 | 15 | 1248 | A | 4 | 18 | 8 | | 49 | N/A | N/A | | 4 | | 8 | 30 | N/A | N/A | |
| ***Eleventh Ave @ 42nd St*** | NORTHEAST | 1 | 16 | 5 | 16 | 141 | A | 1 | 16 | 5 | 16 | 33 | 63 | B | | 1 | | 5 | 40 | 63 | B | |
| | SOUTHEAST | 2 | 16 | 6 | 15 | 174 | A | 2 | 16 | 6 | 15 | 35 | 39 | C | | 2 | | 6 | 28 | 38 | C | |
| | SOUTHWEST | 3 | 15 | 7 | 16 | 156 | A | 3 | 15 | 7 | 16 | 33 | 55 | B | | 3 | | 7 | 40 | 56 | B | |
| | NORTHWEST | 4 | 15 | 8 | 16 | 146 | A | 4 | 15 | 8 | 16 | 35 | 100 | B | | 4 | | 8 | 28 | 102 | B | |
| ***Tenth Ave @ 30th St*** | NORTHEAST | 1 | 16 | 5 | 15 | 215 | A | 1 | 16 | 5 | 15 | 30 | 51 | B | | 1 | | 5 | | 51 | B | |
| | SOUTHEAST | 2 | 15 | 6 | 15 | 349 | A | 2 | 15 | 6 | 15 | 50 | 148 | A | | 2 | | 6 | | 148 | A | |
| | SOUTHWEST | 3 | 13 | 7 | 14 | 238 | A | 3 | 13 | 7 | 14 | 30 | 75 | B | | 3 | | 7 | | 75 | B | |
| | NORTHWEST | 4 | 15 | 8 | 14 | 183 | A | 4 | 15 | 8 | 14 | 50 | 29 | C | | 4 | | 8 | 36 | 102 | B | |
| ***Tenth Ave @ 31st St*** | NORTHEAST | 1 | 15 | 5 | 15 | 365 | A | 1 | 15 | 5 | 15 | 30 | 33 | C | | 1 | | 5 | | 32 | C | |
| | SOUTHEAST | 2 | 15 | 6 | 15 | 413 | A | 2 | 15 | 6 | 15 | 50 | 60 | B | | 2 | | 6 | 30 | 51 | B | |
| | SOUTHWEST | 3 | 13 | 7 | | N/A | N/A | 3 | 13 | 7 | | 30 | N/A | N/A | | 3 | | 7 | | N/A | N/A | |
| | NORTHWEST | 4 | 13 | 8 | | N/A | N/A | 4 | 13 | 8 | | 50 | N/A | N/A | | 4 | | 8 | 30 | N/A | N/A | |
| ***Tenth Ave @ 33rd St*** | NORTHEAST | 1 | 15 | 5 | 15 | 317 | A | 1 | 15 | 5 | 15 | 32 | 49 | B | | 1 | | 5 | | 49 | B | |
| | SOUTHEAST | 2 | 15 | 6 | 15 | 227 | A | 2 | 15 | 6 | 15 | 48 | 7 | E | Yes | 2 | | 6 | | 23 | D | |
| | SOUTHWEST | 3 | 13 | 7 | 13 | 197 | A | 3 | 13 | 7 | 13 | 32 | -12 | F | Yes | 3 | | 7 | 35 | 4 | F | Yes |
| | NORTHWEST | 4 | 13 | 8 | 13 | 279 | A | 4 | 13 | 8 | 18 | 48 | 54 | B | | 4 | 35 | 8 | | 54 | B | |
| ***Tenth Ave @ 34th St*** | NORTHEAST | 1 | 15 | 5 | 15 | 252 | A | 1 | 15 | 5 | 15 | 30 | 77 | B | | 1 | | 5 | | 77 | B | |
| | SOUTHEAST | 2 | 15 | 6 | 15 | 336 | A | 2 | 15 | 6 | 15 | 50 | 66 | B | | 2 | | 6 | | 66 | B | |
| | SOUTHWEST | 3 | 20 | 7 | 20 | 384 | A | 3 | 20 | 7 | 30 | 30 | 100 | B | | 3 | | 7 | | 100 | B | |
| | NORTHWEST | 4 | 20 | 8 | 20 | 269 | A | 4 | 20 | 8 | 30 | 50 | 113 | B | | 4 | | 8 | | 113 | B | |

# Appendix S.5.4

**Pedestrian Improvement Analysis - Corner Level of Service**

**2025 Future Conditions (SUN)**

| Intersection | Corner Location | 2025 Future without the Proposed Action | | | | | | 2025 Future with the Proposed Action | | | | | | | 2025 Future with the Proposed Action (Improvement) | | | | | |
|---|---|---|---|---|---|---|---|---|---|---|---|---|---|---|---|---|---|---|---|---|
| | | | Sidewalk Width for No Build Condition | | | Pedestrian Flow Rate (s.f./ped.) | Level of Service | | Sidewalk Width for Build Condition | | Pedestrian Green | Pedestrian Flow Rate (s.f./ped.) | Level of Service | Impact? | | Proposed Sidewalk Width | | Signal Timing | Pedestrian Flow Rate (s.f./ped.) | Level of Service | Still Impact? |
| ***Ninth Ave @ 30th St*** | NORTHEAST | 1 | 16 | 5 | 16 | 111 | B | 1 | 16 | 5 | 16 | 36 | 44 | B | | 1 | 5 | | | 44 | B | |
| | SOUTHEAST | 2 | 15 | 6 | 16 | 117 | B | 2 | 15 | 6 | 16 | 44 | 51 | B | | 2 | 6 | | | 51 | B | |
| | SOUTHWEST | 3 | 13 | 7 | 14 | 93 | B | 3 | 13 | 7 | 14 | 36 | 36 | C | | 3 | 7 | | | 36 | C | |
| | NORTHWEST | 4 | 13 | 8 | 12 | 121 | B | 4 | 13 | 8 | 12 | 44 | 44 | B | | 4 | 8 | | | 44 | B | |
| ***Ninth Ave @ 31st St*** | NORTHEAST | 1 | 15 | 5 | 15 | 44 | B | 1 | 20 | 5 | 15 | 30 | 15 | D | | 1 | 5 | | | 15 | D | |
| | SOUTHEAST | 2 | 13 | 6 | 15 | 80 | B | 2 | 13 | 6 | 15 | 50 | 40 | B | | 2 | 6 | | | 40 | B | |
| | SOUTHWEST | 3 | 13 | 7 | 13 | 213 | A | 3 | 13 | 7 | 13 | 30 | 33 | C | | 3 | 7 | | | 33 | C | |
| | NORTHWEST | 4 | 13 | 8 | 13 | 119 | B | 4 | 13 | 8 | 13 | 50 | 22 | D | | 4 | 8 | | | 22 | D | |
| ***Ninth Ave @ 33rd St*** | NORTHEAST | 1 | 15 | 5 | 15 | 59 | B | 1 | 15 | 5 | 15 | 30 | 13 | E | Yes | 1 | 5 | | | 13 | E | Yes |
| | SOUTHEAST | 2 | 15 | 6 | 15 | 46 | B | 2 | 15 | 6 | 20 | 50 | 4 | F | Yes | 2 | 6 | | | 28 | C | |
| | SOUTHWEST | 3 | 13 | 7 | 13 | 72 | B | 3 | 13 | 7 | 18 | 30 | 5 | F | Yes | 3 | 7 | 40 | | 21 | D | |
| | NORTHWEST | 4 | 13 | 8 | 13 | 141 | A | 4 | 13 | 8 | 13 | 50 | 7 | E | Yes | 4 | 35 8 | | | 7 | E | Yes |
| ***Ninth Ave @ 34th St*** | NORTHEAST | 1 | 15 | 5 | 15 | 96 | B | 1 | 15 | 5 | 15 | 25 | 52 | B | | 1 | 5 | | 30 | 50 | B | |
| | SOUTHEAST | 2 | 15 | 6 | 15 | 89 | B | 2 | 15 | 6 | 15 | 40 | 35 | C | | 2 | 6 | | 30 | 35 | C | |
| | SOUTHWEST | 3 | 23 | 7 | 20 | 167 | A | 3 | 23 | 7 | 20 | 25 | 30 | C | | 3 | 7 | | 30 | 30 | C | |
| | NORTHWEST | 4 | 23 | 8 | 20 | 149 | A | 4 | 23 | 8 | 20 | 40 | 33 | C | | 4 | 8 | | 30 | 30 | C | |
| ***Eighth Ave @ 30th St*** | NORTHEAST | 1 | 14 | 5 | 15 | 136 | A | 1 | 14 | 5 | 15 | 38 | 61 | B | | 1 | 5 | | | 61 | B | |
| | SOUTHEAST | 2 | 15 | 6 | 14 | 180 | A | 2 | 15 | 6 | 14 | 42 | 77 | B | | 2 | 6 | | | 77 | B | |
| | SOUTHWEST | 3 | 13 | 7 | 14 | 150 | A | 3 | 13 | 7 | 14 | 38 | 95 | B | | 3 | 7 | | | 95 | B | |
| | NORTHWEST | 4 | 14 | 8 | 13 | 120 | B | 4 | 14 | 8 | 13 | 42 | 76 | B | | 4 | 8 | | | 76 | B | |
| ***Eighth Ave @ 31st St*** | NORTHEAST | 1 | 16 | 5 | 15 | 484 | A | 1 | 16 | 5 | 15 | 40 | 69 | B | | 1 | 5 | | | 69 | B | |
| | SOUTHEAST | 2 | 24 | 6 | 15 | 93 | B | 2 | 20 | 6 | 15 | 40 | 45 | B | | 2 | 6 | | | 45 | B | |
| | SOUTHWEST | 3 | 49 | 7 | 13 | 96 | B | 3 | 18 | 7 | 13 | 40 | 64 | B | | 3 | 7 | | | 64 | B | |
| | NORTHWEST | 4 | 14 | 8 | 24 | 150 | A | 4 | 14 | 8 | 24 | 40 | 93 | B | | 4 | 8 | | | 93 | B | |
| ***Eighth Ave @ 33rd St*** | NORTHEAST | 1 | 15 | 5 | 43 | 68 | B | 1 | 15 | 5 | 20 | 40 | 41 | B | | 1 | 5 | | 30 | 38 | C | |
| | SOUTHEAST | 2 | 19 | 6 | 16 | 354 | A | 2 | 19 | 6 | 16 | 40 | 40 | B | | 2 | 6 | | 30 | 37 | C | |
| | SOUTHWEST | 3 | 17 | 7 | 24 | 61 | B | 3 | 17 | 7 | 24 | 40 | 49 | B | | 3 | 7 | 46 | 30 | 106 | B | |
| | NORTHWEST | 4 | 43 | 8 | 14 | 34 | C | 4 | 18 | 8 | 14 | 40 | 23 | D | | 4 | 8 | | 30 | 19 | D | |
| ***Eighth Ave @ 34th St*** | NORTHEAST | 1 | 15 | 5 | 15 | 60 | B | 1 | 15 | 5 | 15 | 40 | 47 | B | | 1 | 5 | | 30 | 44 | B | |
| | SOUTHEAST | 2 | 15 | 6 | 15 | 61 | B | 2 | 15 | 6 | 15 | 40 | 38 | C | | 2 | 6 | | 30 | 35 | C | |
| | SOUTHWEST | 3 | 22 | 7 | 22 | 48 | B | 3 | 22 | 7 | 22 | 40 | 35 | C | | 3 | 7 | | 30 | 30 | C | |
| | NORTHWEST | 4 | 22 | 8 | 22 | 52 | B | 4 | 22 | 8 | 22 | 40 | 45 | B | | 4 | 8 | | 30 | 41 | B | |
| ***Sixth Ave @ 34th St*** | NORTHEAST | 1 | | 5 | 17 | 33 | C | 1 | | 5 | 17 | 27 | 33 | C | | 1 | 5 | | 28 | 33 | C | |
| | SOUTHEAST | 2 | 17 | 6 | | 35 | C | 2 | 17 | 6 | | 53 | 34 | C | | 2 | 6 | | 52 | 35 | C | |
| | SOUTHWEST | 3 | 23 | 7 | | N/A | N/A | 3 | 23 | 7 | | 27 | N/A | N/A | | 3 | 7 | | 28 | N/A | N/A | |
| | NORTHWEST | 4 | 23 | 8 | | N/A | N/A | 4 | 23 | 8 | | 53 | N/A | N/A | | 4 | 8 | | 52 | N/A | N/A | |
| ***Broadway @ 34th St*** | NORTHEAST | 1 | 30 | 5 | | N/A | N/A | 1 | 30 | 5 | | 27 | N/A | N/A | | 1 | 5 | | 28 | N/A | N/A | |
| | SOUTHEAST | 2 | | 6 | 30 | N/A | N/A | 2 | | 6 | 30 | 53 | N/A | N/A | | 2 | 6 | | 52 | N/A | N/A | |
| | SOUTHWEST | 3 | | 7 | 23 | 93 | B | 3 | | 7 | 23 | 27 | 90 | B | | 3 | 7 | | 28 | 90 | B | |
| | NORTHWEST | 4 | | 8 | 23 | 81 | B | 4 | | 8 | 23 | 53 | 79 | B | | 4 | 8 | | 52 | 79 | B | |
| ***Blvd @ 33rd St*** | NORTHEAST | | | | | N/A | N/A | 1 | 15 | 5 | | 45 | 46 | B | | 1 | 5 | | | 46 | B | |
| | SOUTHEAST | | | | | N/A | N/A | 2 | 18 | 6 | | 45 | N/A | N/A | | 2 | 6 | | | N/A | N/A | |
| | SOUTHWEST | | | | | N/A | N/A | 3 | 18 | 7 | 13 | 45 | N/A | N/A | | 3 | 7 | 35 | | N/A | N/A | |
| | NORTHWEST | | | | | N/A | N/A | 4 | 13 | 8 | 18 | 45 | 28 | C | | 4 | 35 8 | | | 28 | C | |

# Appendix S.5.4

**Pedestrian Improvement Analysis - Corner Level of Service**

**2025 Future Conditions (SUN)**

| Intersection | Corner Location | 2025 Future without the Proposed Action | | | | 2025 Future with the Proposed Action | | | | | | 2025 Future with the Proposed Action (Improvement) | | | | | |
|---|---|---|---|---|---|---|---|---|---|---|---|---|---|---|---|---|---|
| | | Sidewalk Width for No Build Condition | | Pedestrian Flow Rate (s.f./ped.) | Level of Service | Sidewalk Width for Build Condition | | Pedestrian Green | Pedestrian Flow Rate (s.f./ped.) | Level of Service | Impact? | Proposed Sidewalk Width | | Signal Timing | Pedestrian Flow Rate (s.f./ped.) | Level of Service | Still Impact? |
| ***Blvd @ 34th St*** | NORTHEAST | | | N/A | N/A | 1 18 | 5 18 | 30 | 169 | A | | 1 | 5 | | 169 | A | |
| | SOUTHEAST | | | N/A | N/A | 2 18 | 6 18 | 50 | 177 | A | | 2 | 6 | | 177 | A | |
| | SOUTHWEST | | | N/A | N/A | 3 30 | 7 30 | 30 | 159 | A | | 3 | 7 | | 159 | A | |
| | NORTHWEST | | | N/A | N/A | 4 30 | 8 30 | 50 | 131 | A | | 4 | 8 | | 131 | A | |
| ***N.Blvd @ 35th St*** | NORTHEAST | | | N/A | N/A | 1 | 5 18 | 40 | 164 | A | | 1 | 5 | | 164 | A | |
| | SOUTHEAST | | | N/A | N/A | 2 18 | 6 18 | 40 | 67 | B | | 2 | 6 | | 67 | B | |
| | SOUTHWEST | | | N/A | N/A | 3 24 | 7 18 | 40 | 146 | A | | 3 | 7 | | 146 | A | |
| | NORTHWEST | | | N/A | N/A | 4 18 | 8 | 40 | N/A | N/A | | 4 | 8 | | N/A | N/A | |
| ***N.Blvd @ 36th St*** | NORTHEAST | | | N/A | N/A | 1 | 5 18 | 40 | 191 | A | | 1 | 5 | | 191 | A | |
| | SOUTHEAST | | | N/A | N/A | 2 18 | 6 | 40 | 89 | B | | 2 | 6 | | 89 | B | |
| | SOUTHWEST | | | N/A | N/A | 3 22 | 7 | 40 | N/A | N/A | | 3 | 7 | | N/A | N/A | |
| | NORTHWEST | | | N/A | N/A | 4 18 | 8 | 40 | N/A | N/A | | 4 | 8 | | N/A | N/A | |
| ***N.Blvd @ 37th St*** | NORTHEAST | | | N/A | N/A | 1 | 5 18 | 32 | 159 | A | | 1 | 5 | | 159 | A | |
| | SOUTHEAST | | | N/A | N/A | 2 18 | 6 | 48 | 134 | A | | 2 | 6 | | 134 | A | |
| | SOUTHWEST | | | N/A | N/A | 3 22 | 7 | 32 | N/A | N/A | | 3 | 7 | | N/A | N/A | |
| | NORTHWEST | | | N/A | N/A | 4 17 | 8 | 48 | N/A | N/A | | 4 | 8 | | N/A | N/A | |
| ***Blvd @ 38th St*** | NORTHEAST | | | N/A | N/A | 1 18 | 5 18 | 40 | 187 | A | | 1 | 5 | | 187 | A | |
| | SOUTHEAST | | | N/A | N/A | 2 18 | 6 18 | 40 | 132 | A | | 2 | 6 | | 132 | A | |
| | SOUTHWEST | | | N/A | N/A | 3 22 | 7 17 | 40 | 133 | A | | 3 | 7 | | 133 | A | |
| | NORTHWEST | | | N/A | N/A | 4 17 | 8 22 | 40 | 166 | A | | 4 | 8 | | 166 | A | |
| ***S.Blvd @ 35th St*** | NORTHEAST | | | N/A | N/A | 1 18 | 5 | 30 | N/A | N/A | | 1 | 5 | | N/A | N/A | |
| | SOUTHEAST | | | N/A | N/A | 2 | 6 | 50 | N/A | N/A | | 2 | 6 | | N/A | N/A | |
| | SOUTHWEST | | | N/A | N/A | 3 | 7 18 | 30 | N/A | N/A | | 3 | 7 | | N/A | N/A | |
| | NORTHWEST | | | N/A | N/A | 4 | 8 24 | 50 | 131 | A | | 4 | 8 | | 131 | A | |
| ***S.Blvd @ 36th St*** | NORTHEAST | | | N/A | N/A | 1 18 | 5 | 30 | N/A | N/A | | 1 | 5 | | N/A | N/A | |
| | SOUTHEAST | | | N/A | N/A | 2 | 6 18 | 50 | N/A | N/A | | 2 | 6 | | N/A | N/A | |
| | SOUTHWEST | | | N/A | N/A | 3 | 7 18 | 30 | 106 | B | | 3 | 7 | | 106 | B | |
| | NORTHWEST | | | N/A | N/A | 4 | 8 22 | 50 | 169 | A | | 4 | 8 | | 169 | A | |
| ***S.Blvd @ 37th St*** | NORTHEAST | | | N/A | N/A | 1 18 | 5 | 32 | N/A | N/A | | 1 | 5 | | N/A | N/A | |
| | SOUTHEAST | | | N/A | N/A | 2 | 6 18 | 48 | N/A | N/A | | 2 | 6 | | N/A | N/A | |
| | SOUTHWEST | | | N/A | N/A | 3 | 7 17 | 32 | 146 | A | | 3 | 7 | | 146 | A | |
| | NORTHWEST | | | N/A | N/A | 4 | 8 22 | 48 | 153 | A | | 4 | 8 | | 153 | A | |

# Appendix S.5.5

**Existing Conditions : Crosswalks Level of Service**

| | | | AM | | | | | | MD | | | | | | PM | | | | | | SE-EVE | | | | | | SE-SUN | | | | | |
|---|---|---|---|---|---|---|---|---|---|---|---|---|---|---|---|---|---|---|---|---|---|---|---|---|---|---|---|---|---|---|---|---|
| | | Crosswalk | WO/V | | W/V | | MAX S | | WO/V | | W/V | | MAX S | | WO/V | | W/V | | MAX S | | WO/V | | W/V | | MAX S | | WO/V | | W/V | | MAX S | |
| Intersection | Crosswalk | Width | SF/P | LOS | SF/P | LOS | SF/P | LOS | SF/P | LOS | SF/P | LOS | SF/P | LOS | SF/P | LOS | SF/P | LOS | SF/P | LOS | SF/P | LOS | SF/P | LOS | SF/P | LOS | SF/P | LOS | SF/P | LOS | SF/P | LOS |
| Twelfth Ave @ 30th St | East | 19 | 23598 | A | 19597 | A | 4319 | A | 14321 | A | 11500 | A | 3118 | A | 12023 | A | 10100 | A | 2696 | A | 14321 | A | 12269 | A | 3118 | A | 7161 | A | 6006 | A | 1559 | A |
| | South | 15 | 1215 | A | 1215 | A | 1383 | A | 5316 | A | 5316 | A | 6015 | A | 2531 | A | 2531 | A | 3824 | A | 5316 | A | 5316 | A | 6015 | A | 5316 | A | 5316 | A | 6015 | A |
| Twelfth Ave @ 34th St | East | 14 | 14553 | A | 11185 | A | 4378 | A | 6733 | A | 5408 | A | 2476 | A | 3780 | A | 3234 | A | 1363 | A | 8978 | A | 8042 | A | 3301 | A | 3847 | A | 3313 | A | 1415 | A |
| | South | 15 | 1755 | A | 1510 | A | 1792 | A | 4388 | A | 3831 | A | 4475 | A | 6581 | A | 6164 | A | 6713 | A | 6581 | A | 6164 | A | 6713 | A | 6581 | A | 5829 | A | 6713 | A |
| Twelfth Ave @ 39th St | East | 11 | 9801 | A | 8601 | A | 2556 | A | 1897 | A | 1664 | A | 635 | A | 3712 | A | 3232 | A | 1199 | A | 3341 | A | 2921 | A | 1130 | A | 1897 | A | 1697 | A | 635 | A |
| | South | 15 | 729 | A | 729 | A | 671 | A | 3417 | A | 3417 | A | 3161 | A | 1709 | A | 1709 | A | 1581 | A | 1709 | A | 1709 | A | 1581 | A | 547 | A | 547 | A | 506 | A |
| Twelfth Ave @ 40th St | East | 14 | 9072 | A | 8383 | A | 1917 | A | 7087 | A | 6595 | A | 1792 | A | 11970 | A | 11313 | A | 3043 | A | | | | | | | | | | | | |
| | South | 15 | 7492 | A | 7492 | A | 5402 | A | 14175 | A | 14175 | A | 12753 | A | 4556 | A | 4556 | A | 4215 | A | | | | | | | | | | | | |
| Twelfth Ave @ 42nd St | North | 15 | 1350 | A | 1178 | A | 1350 | A | 1687 | A | 1572 | A | 1687 | A | 690 | A | 616 | A | 690 | A | | | | | | | | | | | | |
| | East | 15 | 3341 | A | 2883 | A | 1187 | A | 1933 | A | 1542 | A | 918 | A | 1312 | A | 1129 | A | 547 | A | | | | | | | | | | | | |
| | South | 15 | 675 | A | 626 | A | 571 | A | 3037 | A | 2928 | A | 2595 | A | 2531 | A | 2349 | A | 2163 | A | | | | | | | | | | | | |
| Eleventh Ave @ 29th St | North | 11 | 6105 | A | 6105 | A | 3370 | A | 6105 | A | 6105 | A | 3370 | A | 9157 | A | 9157 | A | 5054 | A | | | | | | | | | | | | |
| | East | 13 | 7215 | A | 7215 | A | 2190 | A | 2706 | A | 2706 | A | 821 | A | 3607 | A | 3607 | A | 1095 | A | | | | | | | | | | | | |
| | South | 11 | 675 | A | 626 | A | 571 | A | 6105 | A | 5918 | A | 3370 | A | 4579 | A | 4299 | A | 2527 | A | | | | | | | | | | | | |
| | West | 13 | 7215 | A | 7215 | A | 2190 | A | 3607 | A | 3380 | A | 1095 | A | 1804 | A | 1747 | A | 547 | A | | | | | | | | | | | | |
| Eleventh Ave @ 30th St | North | 11 | 18315 | A | 18315 | A | 10109 | A | 2035 | A | 2035 | A | 1123 | A | 9157 | A | 9157 | A | 5054 | A | 9157 | A | 9157 | A | 5054 | A | 18315 | A | 18315 | A | 10109 | A |
| | East | 13 | 7215 | A | 6534 | A | 2190 | A | 2405 | A | 1875 | A | 730 | A | 1968 | A | 1658 | A | 597 | A | 10822 | A | 10141 | A | 3285 | A | 21645 | A | 19601 | A | 6569 | A |
| | South | 11 | 675 | A | 626 | A | 571 | A | 6105 | A | 6012 | A | 3370 | A | 9157 | A | 8877 | A | 5054 | A | 6105 | A | 6012 | A | 3370 | A | 6105 | A | 6012 | A | 3370 | A |
| | West | 13 | 10822 | A | 10822 | A | 3285 | A | 1804 | A | 1804 | A | 547 | A | 3607 | A | 3607 | A | 1095 | A | 7215 | A | 7215 | A | 2190 | A | 21645 | A | 21645 | A | 6569 | A |
| Eleventh Ave @ 33rd St | North | 11 | 5445 | A | 5445 | A | 4147 | A | 3630 | A | 3630 | A | 2765 | A | 5445 | A | 5445 | A | 4147 | A | 5445 | A | 5445 | A | 4147 | A | 3630 | A | 3630 | A | 2765 | A |
| | East | 13 | 7605 | A | 7605 | A | 2183 | A | 7605 | A | 7605 | A | 2183 | A | 5070 | A | 5070 | A | 1455 | A | 15210 | A | 15210 | A | 4366 | A | 10140 | A | 10140 | A | 2911 | A |
| | South | 11 | 5445 | A | 4885 | A | 4147 | A | 2722 | A | 2512 | A | 2073 | A | 5445 | A | 4885 | A | 4147 | A | 5445 | A | 5305 | A | 4147 | A | 5445 | A | 5165 | A | 4147 | A |
| | West | 13 | 3042 | A | 3042 | A | 916 | A | 15210 | A | 15210 | A | 4578 | A | 7605 | A | 7605 | A | 2289 | A | 15210 | A | 15210 | A | 4578 | A | 10140 | A | 10140 | A | 3052 | A |
| Eleventh Ave @ 34th St | North | 18 | 3078 | A | 2551 | A | 2712 | A | 1080 | A | 934 | A | 799 | A | 1417 | A | 1161 | A | 1156 | A | 1924 | A | 1869 | A | 1695 | A | 481 | A | 453 | A | 424 | A |
| | East | 12 | 1414 | A | 1380 | A | 631 | A | 3375 | A | 3148 | A | 1500 | A | 4770 | A | 4528 | A | 2119 | A | 4243 | A | 4139 | A | 1892 | A | 2970 | A | 2861 | A | 1324 | A |
| | South | 18 | 1710 | A | 1409 | A | 1473 | A | 1144 | A | 1011 | A | 827 | A | 1417 | A | 1305 | A | 1131 | A | 1710 | A | 1509 | A | 1473 | A | 1184 | A | 975 | A | 1020 | A |
| | West | 13 | 10725 | A | 10081 | A | 4841 | A | 4875 | A | 4425 | A | 2194 | A | 6201 | A | 5815 | A | 2789 | A | 5362 | A | 5169 | A | 2421 | A | 6435 | A | 6049 | A | 2905 | A |
| Eleventh Ave @ 35th St | North | 10 | 5550 | A | 5413 | A | 3608 | A | 2775 | A | 2707 | A | 1804 | A | 5550 | A | 5345 | A | 3608 | A | | | | | | | | | | | | |
| | East | 11 | 6105 | A | 6105 | A | 1994 | A | 6105 | A | 6105 | A | 1994 | A | 6105 | A | 6105 | A | 1994 | A | | | | | | | | | | | | |
| | South | 11 | 9157 | A | 8482 | A | 5954 | A | 4579 | A | 4184 | A | 2977 | A | 18315 | A | 16963 | A | 11907 | A | | | | | | | | | | | | |
| Eleventh Ave @ 36th St | North | 11 | 3135 | A | 3135 | A | 3149 | A | 3135 | A | 3135 | A | 3149 | A | 4703 | A | 4703 | A | 4724 | A | | | | | | | | | | | | |
| | East | 10 | 8550 | A | 4986 | A | 3999 | A | 4275 | A | 2238 | A | 1999 | A | 1710 | A | 794 | A | 800 | A | | | | | | | | | | | | |
| | South | 11 | 1881 | A | 1881 | A | 1907 | A | 1881 | A | 1881 | A | 1907 | A | 1881 | A | 1881 | A | 1907 | A | | | | | | | | | | | | |
| Eleventh Ave @ 37th St | North | 10 | 2137 | A | 2078 | A | 1925 | A | 4275 | A | 4156 | A | 3850 | A | 2850 | A | 2692 | A | 2567 | A | | | | | | | | | | | | |
| | East | 8 | 19800 | A | 19800 | A | 6028 | A | 2829 | A | 2829 | A | 861 | A | 9900 | A | 9900 | A | 3014 | A | | | | | | | | | | | | |
| | South | 10 | 1881 | A | 1881 | A | 1907 | A | 570 | A | 507 | A | 513 | A | 4275 | A | 3562 | A | 3850 | A | | | | | | | | | | | | |
| Eleventh Ave @ 38th St | North | 9 | 3847 | A | 3847 | A | 3465 | A | 513 | A | 513 | A | 462 | A | 3847 | A | 3847 | A | 3465 | A | | | | | | | | | | | | |
| | East | 8 | 3420 | A | 1544 | A | 1722 | A | 760 | A | 343 | A | 383 | A | 3420 | A | 1544 | A | 1722 | A | | | | | | | | | | | | |
| | South | 9 | 3847 | A | 3847 | A | 3465 | A | 2565 | A | 2565 | A | 2310 | A | 962 | A | 962 | A | 866 | A | | | | | | | | | | | | |
| Eleventh Ave @ 39th St | North | 10 | 4200 | A | 4119 | A | 2800 | A | 663 | A | 637 | A | 442 | A | 6300 | A | 6300 | A | 4200 | A | 6300 | A | 6056 | A | 4200 | A | 1260 | A | 1162 | A | 840 | A |
| | East | 11 | 5692 | A | 5692 | A | 1591 | A | 4554 | A | 4554 | A | 1273 | A | 7590 | A | 7590 | A | 2121 | A | 11385 | A | 11385 | A | 3182 | A | 5692 | A | 5692 | A | 1591 | A |
| | South | 12 | 7560 | A | 5872 | A | 5202 | A | 7560 | A | 5872 | A | 5202 | A | 7560 | A | 6716 | A | 5202 | A | 1890 | A | 1644 | A | 1301 | A | 889 | A | 691 | A | 612 | A |
| | West | 13 | 354 | A | 354 | A | 107 | B | 3364 | A | 3364 | A | 1012 | A | 8970 | A | 8970 | A | 2700 | A | 2242 | A | 2242 | A | 675 | A | 1495 | A | 1495 | A | 450 | A |
| Eleventh Ave @ 40th St | North | 11 | 3135 | A | 3135 | A | 2823 | A | 3135 | A | 3135 | A | 2823 | A | 4702 | A | 4702 | A | 4235 | A | | | | | | | | | | | | |
| | East | 10 | 8250 | A | 5676 | A | 3724 | A | 4950 | A | 3643 | A | 2234 | A | 12375 | A | 7178 | A | 5586 | A | | | | | | | | | | | | |
| | South | 11 | 4702 | A | 4702 | A | 4235 | A | 1881 | A | 1881 | A | 1694 | A | 523 | A | 523 | A | 471 | A | | | | | | | | | | | | |
| | West | 13 | 2011 | A | 1971 | A | 612 | A | 2925 | A | 2925 | A | 890 | A | 1893 | A | 1855 | A | 576 | A | | | | | | | | | | | | |
| Eleventh Ave @ 42nd St | North | 15 | 6750 | A | 6750 | A | 4169 | A | 964 | A | 964 | A | 596 | A | 547 | A | 547 | A | 338 | A | 964 | A | 964 | A | 596 | A | 1013 | A | 1013 | A | 625 | A |
| | East | 13 | 669 | A | 657 | A | 393 | A | 985 | A | 950 | A | 579 | A | 1702 | A | 1671 | A | 1001 | A | 851 | A | 820 | A | 500 | A | 1248 | A | 1203 | A | 734 | A |
| | South | 15 | 723 | A | 629 | A | 452 | A | 964 | A | 839 | A | 602 | A | 547 | A | 446 | A | 342 | A | 675 | A | 575 | A | 422 | A | 494 | A | 365 | A | 309 | A |
| | West | 14 | 517 | A | 498 | A | 300 | A | 5040 | A | 5040 | A | 2930 | A | 1186 | A | 1186 | A | 689 | A | 5040 | A | 4765 | A | 2930 | A | 1551 | A | 1494 | A | 901 | A |
| Tenth Ave @ 29th St | North | 11 | 1485 | A | 1361 | A | 980 | A | 2228 | A | 1994 | A | 1470 | A | 1337 | A | 1196 | A | 882 | A | | | | | | | | | | | | |
| | East | 13 | 2500 | A | 2500 | A | 715 | A | 948 | A | 948 | A | 271 | A | 3055 | A | 3055 | A | 874 | A | | | | | | | | | | | | |
| | South | 11 | 1215 | A | 1215 | A | 802 | A | 1337 | A | 1337 | A | 882 | A | 1337 | A | 1337 | A | 882 | A | | | | | | | | | | | | |
| | West | 13 | 3437 | A | 3267 | A | 984 | A | 1527 | A | 1376 | A | 437 | A | 1964 | A | 1867 | A | 562 | A | | | | | | | | | | | | |
| Tenth Ave @ 30th St | North | 14 | 5670 | A | 5201 | A | 3785 | A | 8505 | A | 7802 | A | 5678 | A | 2430 | A | 2279 | A | 1622 | A | 5670 | A | 5553 | A | 3785 | A | 5670 | A | 5436 | A | 3785 | A |
| | East | 16 | 2417 | A | 2126 | A | 709 | A | 3384 | A | 3140 | A | 993 | A | 11280 | A | 8565 | A | 3309 | A | 5640 | A | 4554 | A | 1654 | A | 8460 | A | 6831 | A | 2481 | A |
| | South | 13 | 1580 | A | 1580 | A | 1090 | A | 2256 | A | 2256 | A | 1557 | A | 1436 | A | 1436 | A | 991 | A | 3949 | A | 3949 | A | 2725 | A | 5265 | A | 5265 | A | 3633 | A |
| | West | 18 | 6345 | A | 6345 | A | 1861 | A | 5439 | A | 5439 | A | 1595 | A | 2928 | A | 2928 | A | 859 | A | 4759 | A | 4759 | A | 1396 | A | 3807 | A | 3807 | A | 1117 | A |
| Tenth Ave @ 31st St | North | 13 | 7897 | A | 7070 | A | 5213 | A | 5265 | A | 4603 | A | 3475 | A | 7897 | A | 6905 | A | 5213 | A | 3159 | A | 2894 | A | 2085 | A | 7897 | A | 7070 | A | 5213 | A |
| | East | 12 | 1586 | A | 1586 | A | 454 | A | 1586 | A | 1586 | A | 454 | A | 1692 | A | 1692 | A | 484 | A | 6345 | A | 6345 | A | 1816 | A | 6345 | A | 6345 | A | 1816 | A |
| | South | 11 | 6682 | A | 6682 | A | 4411 | A | 1909 | A | 1909 | A | 1260 | A | 4455 | A | 4455 | A | 2941 | A | 3341 | A | 3341 | A | 2205 | A | 6682 | A | 6682 | A | 4411 | A |
| Tenth Ave @ 33rd St | North | 12 | 580 | A | 534 | A | 362 | A | 161 | A | 145 | A | 101 | B | 1740 | A | 1602 | A | 1085 | A | 1205 | A | 1133 | A | 751 | A | 3915 | A | 3605 | A | 2441 | A |
| | East | 14 | 1181 | A | 1181 | A | 322 | A | 591 | A | 591 | A | 161 | A | 1289 | A | 1289 | A | 352 | A | 1492 | A | 1492 | A | 407 | A | 14175 | A | 14175 | A | 3869 | A |
| | South | 11 | 897 | A | 897 | A | 572 | A | 598 | A | 598 | A | 381 | A | 684 | A | 684 | A | 436 | A | 2051 | A | 2051 | A | 1308 | A | 7178 | A | 7178 | A | 4577 | A |
| | West | 13 | 1755 | A | 1667 | A | 517 | A | 432 | A | 399 | A | 127 | B | 1053 | A | 1000 | A | 310 | A | 8775 | A | 8334 | A | 2586 | A | 1880 | A | 1786 | A | 554 | A |
| Tenth Ave @ 34th St | North | 18 | 280 | A | 233 | A | 183 | A | 312 | A | 259 | A | 204 | A | 377 | A | 321 | A | 246 | A | 875 | A | 800 | A | 571 | A | 875 | A | 800 | A | 571 | A |
| | East | 13 | 1018 | A | 960 | A | 456 | A | 687 | A | 648 | A | 308 | A | 916 | A | 864 | A | 410 | A | 1057 | A | 1012 | A | 473 | A | 2500 | A | 2464 | A | 1118 | A |
| | South | 18 | 317 | A | 317 | A | 204 | A | 263 | A | 263 | A | 170 | A | 260 | A | 260 | A | 168 | A | 384 | A | 384 | A | 247 | A | 1458 | A | 1458 | A | 940 | A |
| | West | 13 | 1146 | A | 1080 | A | 513 | A | 519 | A | 482 | A | 232 | A | 786 | A | 729 | A | 351 | A | 2749 | A | 2671 | A | 1230 | A | 2749 | A | 2710 | A | 1230 | A |
| Tenth Ave @ 35th St | North | 11 | 230 | A | 216 | A | 154 | A | 318 | A | 298 | A | 212 | A | 267 | A | 234 | A | 178 | A | | | | | | | | | | | | |
| | East | 12 | 5076 | A | 5076 | A | 1453 | A | 769 | A | 769 | A | 220 | A | 769 | A | 769 | A | 220 | A | | | | | | | | | | | | |
| | West | 12 | 1952 | A | 1856 | A | 559 | A | 518 | A | 479 | A | 148 | A | 590 | A | 561 | A | 169 | A | | | | | | | | | | | | |
| Tenth Ave @ 36th St | North | 10 | 868 | A | 850 | A | 573 | A | 486 | A | 455 | A | 321 | A | 528 | A | 484 | A | 349 | A | | | | | | | | | | | | |
| | East | 12 | 251 | A | 228 | A | 77 | B | 2115 | A | 1922 | A | 650 | A | 769 | A | 682 | A | 236 | A | | | | | | | | | | | | |
| | South | 11 | 197 | A | 197 | A | 130 | A | 431 | A | 431 | A | 285 | A | 161 | A | 161 | A | 106 | B | | | | | | | | | | | | |
| | West | 12 | 379 | A | 379 | A | 114 | B | 846 | A | 846 | A | 254 | A | 461 | A | 461 | A | 139 | A | | | | | | | | | | | | |
| Tenth Ave @ 37th St | North | 10 | 544 | A | 512 | A | 343 | A | 870 | A | 819 | A | 549 | A | 593 | A | 443 | A | 374 | A | | | | | | | | | | | | |
| | East | 13 | 711 | A | 711 | A | 215 | A | 940 | A | 940 | A | 284 | A | 1549 | A | 1549 | A | 467 | A | | | | | | | | | | | | |
| | South | 10 | 1631 | A | 1631 | A | 1029 | A | 544 | A | 544 | A | 343 | A | 653 | A | 653 | A | 411 | A | | | | | | | | | | | | |
| | West | 13 | 1145 | A | 1089 | A | 346 | A | 908 | A | 886 | A | 274 | A | 1880 | A | 1697 | A | 568 | A | | | | | | | | | | | | |

# Appendix S.5.5

**Existing Conditions : Crosswalks Level of Service**

| | | | AM | | | | | | MD | | | | | | PM | | | | | | SE-EVE | | | | | | SE-SUN | | | | | |
|---|---|---|---|---|---|---|---|---|---|---|---|---|---|---|---|---|---|---|---|---|---|---|---|---|---|---|---|---|---|---|---|---|
| | | Crosswalk | WO/V | | W/V | | MAX S | | WO/V | | W/V | | MAX S | | WO/V | | W/V | | MAX S | | WO/V | | W/V | | MAX S | | WO/V | | W/V | | MAX S | |
| Intersection | Crosswalk | Width | SF/P | LOS | SF/P | LOS | SF/P | LOS | SF/P | LOS | SF/P | LOS | SF/P | LOS | SF/P | LOS | SF/P | LOS | SF/P | LOS | SF/P | LOS | SF/P | LOS | SF/P | LOS | SF/P | LOS | SF/P | LOS | SF/P | LOS |
| Tenth Ave @ 38th St | North | 10 | 1519 | A | 1455 | A | 1002 | A | 434 | A | 388 | A | 286 | A | 868 | A | 777 | A | 573 | A | | | | | | | | | | | | |
| | East | 13 | 3928 | A | 3376 | A | 1180 | A | 1718 | A | 1477 | A | 516 | A | 1528 | A | 1456 | A | 459 | A | | | | | | | | | | | | |
| | South | 10 | 6075 | A | 6075 | A | 4010 | A | 715 | A | 715 | A | 472 | A | 810 | A | 810 | A | 535 | A | | | | | | | | | | | | |
| | West | 13 | 2500 | A | 2500 | A | 751 | A | 2115 | A | 2115 | A | 635 | A | 1718 | A | 1718 | A | 516 | A | | | | | | | | | | | | |
| Tenth Ave @ 39th St | North | 13 | 9360 | A | 8698 | A | 5567 | A | 9360 | A | 8864 | A | 5567 | A | 6240 | A | 6240 | A | 3711 | A | | | | | | | | | | | | |
| | East | 10 | 1350 | A | 1350 | A | 413 | A | 1350 | A | 1350 | A | 413 | A | 1181 | A | 1181 | A | 362 | A | | | | | | | | | | | | |
| | South | 13 | 3120 | A | 3120 | A | 1856 | A | 3744 | A | 3744 | A | 2227 | A | 1248 | A | 1248 | A | 742 | A | | | | | | | | | | | | |
| | West | 11 | 4158 | A | 4080 | A | 1675 | A | 2970 | A | 2578 | A | 1196 | A | 1299 | A | 1299 | A | 523 | A | | | | | | | | | | | | |
| Tenth Ave @ 40th St | North | 11 | 2722 | A | 2675 | A | 1583 | A | 3267 | A | 3154 | A | 1900 | A | 1634 | A | 1605 | A | 950 | A | | | | | | | | | | | | |
| | East | 13 | 1043 | A | 968 | A | 354 | A | 11992 | A | 11418 | A | 4068 | A | 1199 | A | 1027 | A | 407 | A | | | | | | | | | | | | |
| | South | 10 | 4950 | A | 4950 | A | 3051 | A | 4950 | A | 4950 | A | 3051 | A | 3712 | A | 3712 | A | 2288 | A | | | | | | | | | | | | |
| | West | 13 | 11992 | A | 11992 | A | 3400 | A | 4797 | A | 4797 | A | 1360 | A | 1411 | A | 1411 | A | 400 | A | | | | | | | | | | | | |
| Tenth Ave @ 41st St | North | 13.8 | 1534 | A | 1282 | A | 795 | A | 2608 | A | 2251 | A | 1352 | A | 1534 | A | 1513 | A | 795 | A | | | | | | | | | | | | |
| | East | 13.1 | 726 | A | 726 | A | 386 | A | 460 | A | 460 | A | 244 | A | 472 | A | 472 | A | 251 | A | | | | | | | | | | | | |
| | South | 13.5 | 12757 | A | 12757 | A | 6655 | A | 2126 | A | 2126 | A | 1109 | A | 2320 | A | 2320 | A | 1210 | A | | | | | | | | | | | | |
| | West | 11.1 | 1230 | A | 976 | A | 357 | A | 2283 | A | 1718 | A | 662 | A | 940 | A | 863 | A | 273 | A | | | | | | | | | | | | |
| Tenth Ave @ 42nd St | North | 17.3 | 212 | A | 104 | B | 128 | B | 240 | A | 163 | A | 146 | A | 162 | A | 97 | B | 98 | B | | | | | | | | | | | | |
| | East | 14.5 | 652 | A | 635 | A | 292 | A | 744 | A | 723 | A | 332 | A | 477 | A | 471 | A | 213 | A | | | | | | | | | | | | |
| | South | 13.8 | 239 | A | 239 | A | 163 | A | 235 | A | 235 | A | 160 | A | 222 | A | 222 | A | 151 | A | | | | | | | | | | | | |
| | West | 15 | 1002 | A | 967 | A | 497 | A | 945 | A | 911 | A | 468 | A | 848 | A | 828 | A | 420 | A | | | | | | | | | | | | |
| Dyer @ 42nd St | East | 13.6 | 2924 | A | 2251 | A | 890 | A | 4386 | A | 3601 | A | 1335 | A | 2392 | A | 2086 | A | 728 | A | | | | | | | | | | | | |
| | South | 14 | 291 | A | 291 | A | 111 | B | 235 | A | 235 | A | 89 | B | 142 | A | 142 | A | 54 | B | | | | | | | | | | | | |
| | West | 12 | 3317 | A | 2214 | A | 1010 | A | 4644 | A | 3575 | A | 1414 | A | 1222 | A | 784 | A | 372 | A | | | | | | | | | | | | |
| Ninth Ave @ 30th St | North | 11.7 | 267 | A | 267 | A | 155 | A | 965 | A | 965 | A | 560 | A | 965 | A | 965 | A | 560 | A | 1158 | A | 1158 | A | 672 | A | 543 | A | 543 | A | 315 | A |
| | East | 14.3 | 326 | A | 281 | A | 99 | B | 310 | A | 268 | A | 94 | B | 281 | A | 235 | A | 85 | B | 614 | A | 530 | A | 187 | A | 463 | A | 362 | A | 141 | A |
| | South | 15.1 | 255 | A | 226 | A | 137 | A | 623 | A | 564 | A | 335 | A | 431 | A | 382 | A | 232 | A | 1319 | A | 1244 | A | 709 | A | 252 | A | 242 | A | 135 | A |
| | West | 14.5 | 119 | B | 118 | B | 80 | B | 582 | A | 576 | A | 392 | A | 569 | A | 564 | A | 383 | A | 1274 | A | 1274 | A | 858 | A | 505 | A | 505 | A | 340 | A |
| Ninth Ave @ 31st St | North | 16.5 | 2005 | A | 2005 | A | 1368 | A | 378 | A | 378 | A | 258 | A | 1253 | A | 1253 | A | 855 | A | 6682 | A | 6682 | A | 4561 | A | 409 | A | 409 | A | 279 | A |
| | East | 13 | 278 | A | 278 | A | 75 | B | 3055 | A | 3055 | A | 830 | A | 598 | A | 598 | A | 162 | A | 809 | A | 809 | A | 220 | A | 550 | A | 550 | A | 149 | A |
| | South | 14 | 137 | A | 125 | B | 88 | B | 200 | A | 183 | A | 128 | B | 347 | A | 302 | A | 222 | A | 1701 | A | 1478 | A | 1086 | A | 680 | A | 621 | A | 435 | A |
| | West | 13 | 436 | A | 426 | A | 130 | A | 443 | A | 433 | A | 132 | A | 809 | A | 732 | A | 240 | A | 1100 | A | 995 | A | 326 | A | 3437 | A | 3355 | A | 1020 | A |
| Ninth Ave @ 33rd St | North | 12.5 | 103 | B | 103 | B | 66 | B | 108 | B | 108 | B | 70 | B | 1266 | A | 1266 | A | 816 | A | 799 | A | 799 | A | 515 | A | 447 | A | 447 | A | 288 | A |
| | East | 14 | 380 | A | 380 | A | 112 | B | 177 | A | 177 | A | 52 | B | 219 | A | 219 | A | 65 | B | 548 | A | 548 | A | 162 | A | 315 | A | 315 | A | 93 | B |
| | South | 19.5 | 80 | B | 75 | B | 52 | B | 258 | A | 241 | A | 167 | A | 138 | A | 129 | B | 89 | B | 608 | A | 581 | A | 394 | A | 1030 | A | 964 | A | 667 | A |
| | West | 13.5 | 310 | A | 278 | A | 85 | B | 180 | A | 170 | A | 49 | B | 1586 | A | 1463 | A | 437 | A | 1903 | A | 1805 | A | 524 | A | 751 | A | 712 | A | 207 | A |
| Ninth Ave @ 34th St | North | 20 | 171 | A | 171 | A | 112 | B | 172 | A | 172 | A | 113 | B | 92 | B | 92 | B | 60 | B | 360 | A | 360 | A | 272 | A | 300 | A | 300 | A | 227 | A |
| | East | 15 | 162 | A | 147 | A | 76 | B | 139 | A | 126 | B | 65 | B | 98 | B | 91 | B | 45 | B | 338 | A | 296 | A | 146 | A | 189 | A | 177 | A | 82 | B |
| | South | 20 | 105 | B | 86 | B | 67 | B | 125 | B | 97 | B | 79 | B | 97 | B | 80 | B | 62 | B | 261 | A | 148 | A | 191 | A | 198 | A | 177 | A | 145 | A |
| | West | 15 | 257 | A | 247 | A | 136 | A | 133 | A | 131 | A | 71 | B | 212 | A | 203 | A | 112 | B | 735 | A | 631 | A | 362 | A | 999 | A | 946 | A | 492 | A |
| Ninth Ave @ 37th St | North | 10 | 810 | A | 810 | A | 535 | A | 328 | A | 328 | A | 217 | A | 140 | A | 140 | A | 92 | B | | | | | | | | | | | | |
| | East | 13 | 190 | A | 190 | A | 57 | B | 181 | A | 181 | A | 54 | B | 109 | B | 109 | B | 33 | C | | | | | | | | | | | | |
| | South | 10 | 675 | A | 548 | A | 446 | A | 320 | A | 273 | A | 211 | A | 213 | A | 164 | A | 141 | A | | | | | | | | | | | | |
| | West | 13 | 509 | A | 473 | A | 153 | A | 585 | A | 558 | A | 176 | A | 423 | A | 383 | A | 127 | B | | | | | | | | | | | | |
| Ninth Ave @ 38th St | North | 9 | 841 | A | 841 | A | 555 | A | 1562 | A | 1562 | A | 1031 | A | 273 | A | 273 | A | 180 | A | | | | | | | | | | | | |
| | East | 13 | 195 | A | 155 | A | 60 | B | 372 | A | 329 | A | 114 | B | 176 | A | 148 | A | 54 | B | | | | | | | | | | | | |
| | South | 9 | 841 | A | 788 | A | 555 | A | 1215 | A | 1139 | A | 802 | A | 331 | A | 317 | A | 219 | A | | | | | | | | | | | | |
| | West | 13 | 443 | A | 443 | A | 136 | A | 316 | A | 316 | A | 97 | B | 417 | A | 417 | A | 128 | B | | | | | | | | | | | | |
| Ninth Ave @ 39th St | North | 10 | 579 | A | 579 | A | 382 | A | 552 | A | 552 | A | 365 | A | 229 | A | 229 | A | 151 | A | | | | | | | | | | | | |
| | East | 13 | 198 | A | 198 | A | 59 | B | 186 | A | 186 | A | 56 | B | 105 | B | 105 | B | 32 | C | | | | | | | | | | | | |
| | South | 10 | 1012 | A | 928 | A | 668 | A | 486 | A | 435 | A | 321 | A | 467 | A | 418 | A | 308 | A | | | | | | | | | | | | |
| | West | 13 | 430 | A | 409 | A | 129 | B | 529 | A | 479 | A | 159 | A | 252 | A | 252 | A | 76 | B | | | | | | | | | | | | |
| Ninth Ave @ 42nd St | North | 14.7 | 106 | B | 106 | B | 71 | B | 103 | B | 103 | B | 69 | B | 52 | B | 52 | B | 35 | C | | | | | | | | | | | | |
| | East | 13.8 | 88 | B | 79 | B | 47 | B | 92 | B | 86 | B | 49 | B | 56 | B | 53 | B | 30 | C | | | | | | | | | | | | |
| | South | 10 | 65 | B | 58 | B | 44 | B | 57 | B | 47 | B | 39 | C | 52 | B | 43 | B | 35 | C | | | | | | | | | | | | |
| | West | 12.5 | 109 | B | 105 | B | 57 | B | 88 | B | 82 | B | 46 | B | 53 | B | 49 | B | 28 | C | | | | | | | | | | | | |
| Eighth Ave @ 30th St | North | 12 | 310 | A | 285 | A | 174 | A | 454 | A | 426 | A | 248 | A | 357 | A | 333 | A | 200 | A | 822 | A | 755 | A | 462 | A | 573 | A | 498 | A | 322 | A |
| | East | 12.6 | 128 | B | 111 | B | 35 | C | 107 | B | 96 | B | 30 | C | 76 | B | 71 | B | 21 | D | 240 | A | 209 | A | 67 | B | 173 | A | 162 | A | 48 | B |
| | South | 11.5 | 442 | A | 442 | A | 251 | A | 504 | A | 504 | A | 278 | A | 464 | A | 464 | A | 264 | A | 671 | A | 671 | A | 381 | A | 1207 | A | 1207 | A | 685 | A |
| | West | 12.5 | 178 | A | 178 | A | 52 | B | 127 | B | 127 | B | 37 | C | 111 | B | 111 | B | 32 | C | 226 | A | 226 | A | 65 | B | 188 | A | 188 | A | 54 | B |
| Eighth Ave @ 31st St | North | 14.5 | 179 | A | 149 | A | 99 | B | 158 | A | 148 | A | 87 | B | 152 | A | 140 | A | 84 | B | 298 | A | 275 | A | 165 | A | 561 | A | 527 | A | 310 | A |
| | East | 14.5 | 89 | B | 89 | B | 33 | C | 109 | B | 109 | B | 40 | B | 100 | B | 100 | B | 36 | C | 131 | A | 131 | A | 48 | B | 132 | A | 132 | A | 48 | B |
| | South | 14.5 | 224 | A | 224 | A | 123 | B | 159 | A | 159 | A | 88 | B | 189 | A | 189 | A | 104 | B | 447 | A | 447 | A | 247 | A | 335 | A | 335 | A | 185 | A |
| | West | 11.5 | 129 | B | 105 | B | 39 | C | 100 | B | 81 | B | 30 | C | 92 | B | 66 | B | 28 | C | 173 | A | 124 | B | 52 | B | 157 | A | 127 | B | 48 | B |
| Eighth Ave @ 33rd St | North | 14.5 | 75 | B | 73 | B | 37 | C | 101 | B | 98 | B | 50 | B | 51 | B | 48 | B | 25 | C | 273 | A | 266 | A | 136 | A | 184 | A | 178 | A | 98 | B |
| | East | 20 | 75 | B | 75 | B | 24 | C | 50 | B | 50 | B | 16 | D | 39 | C | 39 | C | 12 | E | 76 | B | 76 | B | 24 | C | 91 | B | 91 | B | 26 | C |
| | South | 17 | 82 | B | 82 | B | 42 | B | 72 | B | 72 | B | 37 | C | 84 | B | 84 | B | 43 | B | 193 | A | 193 | A | 100 | B | 179 | A | 179 | A | 99 | B |
| | West | 14 | 25 | C | 22 | D | 8 | E | 69 | B | 55 | B | 22 | D | 46 | B | 37 | C | 15 | D | 46 | B | 39 | C | 15 | D | 145 | A | 111 | B | 42 | B |
| Eighth Ave @ 34th St | North | 20 | 140 | A | 122 | B | 74 | B | 80 | B | 72 | B | 43 | B | 71 | B | 64 | B | 38 | C | 282 | A | 251 | A | 150 | A | 146 | A | 125 | B | 78 | B |
| | East | 13 | 81 | B | 76 | B | 36 | C | 56 | B | 51 | B | 25 | C | 46 | B | 44 | B | 21 | D | 54 | B | 50 | B | 24 | C | 86 | B | 79 | B | 38 | C |
| | South | 20 | 127 | B | 127 | B | 68 | B | 105 | B | 105 | B | 56 | B | 107 | B | 107 | B | 58 | B | 22 | D | 22 | D | 12 | E | 87 | B | 87 | B | 47 | B |
| | West | 13 | 82 | B | 77 | B | 37 | C | 60 | B | 55 | B | 27 | C | 57 | B | 54 | B | 26 | C | 177 | A | 167 | A | 80 | B | 95 | B | 80 | B | 43 | B |
| Eighth Ave @ 37th St | North | 11 | 192 | A | 176 | A | 112 | B | 71 | B | 68 | B | 39 | C | 146 | A | 131 | A | 85 | B | | | | | | | | | | | | |
| | East | 13 | 74 | B | 74 | B | 23 | D | 72 | B | 72 | B | 23 | D | 45 | B | 45 | B | 14 | E | | | | | | | | | | | | |
| | South | 11 | 178 | A | 178 | A | 104 | B | 69 | B | 69 | B | 38 | C | 113 | B | 113 | B | 66 | B | | | | | | | | | | | | |
| | West | 13 | 56 | B | 50 | B | 17 | D | 50 | B | 42 | B | 16 | D | 40 | B | 34 | C | 12 | E | | | | | | | | | | | | |

# Appendix S.5.5

**Existing Conditions : Crosswalks Level of Service**

| | | | AM | | | | | | MD | | | | | | PM | | | | | | SE-EVE | | | | | | SE-SUN | | | | | |
|---|---|---|---|---|---|---|---|---|---|---|---|---|---|---|---|---|---|---|---|---|---|---|---|---|---|---|---|---|---|---|---|---|
| | | Crosswalk | WO/V | | W/V | | MAX S | | WO/V | | W/V | | MAX S | | WO/V | | W/V | | MAX S | | WO/V | | W/V | | MAX S | | WO/V | | W/V | | MAX S | |
| Intersection | Crosswalk | Width | SF/P | LOS | SF/P | LOS | SF/P | LOS | SF/P | LOS | SF/P | LOS | SF/P | LOS | SF/P | LOS | SF/P | LOS | SF/P | LOS | SF/P | LOS | SF/P | LOS | SF/P | LOS | SF/P | LOS | SF/P | LOS | SF/P | LOS |
| Eighth Ave @ 38th St | North | 12 | 440 | A | 383 | A | 249 | A | 571 | A | 527 | A | 315 | A | 1181 | A | 1086 | A | 670 | A | | | | | | | | | | | | |
| | East | 15 | 203 | A | 168 | A | 63 | B | 176 | A | 155 | A | 56 | B | 1097 | A | 911 | A | 343 | A | | | | | | | | | | | | |
| | South | 12 | 386 | A | 386 | A | 219 | A | 196 | A | 196 | A | 108 | B | 282 | A | 282 | A | 160 | A | | | | | | | | | | | | |
| | West | 15 | 119 | B | 119 | B | 39 | C | 238 | A | 238 | A | 80 | B | 2633 | A | 2633 | A | 863 | A | | | | | | | | | | | | |
| Eighth Ave @ 39th St | North | 10 | 162 | A | 147 | A | 89 | B | 108 | B | 100 | B | 60 | B | 173 | A | 158 | A | 96 | B | | | | | | | | | | | | |
| | East | 13 | 32 | C | 32 | C | 10 | E | 57 | B | 57 | B | 18 | D | 30 | C | 30 | C | 10 | E | | | | | | | | | | | | |
| | South | 10 | 151 | A | 151 | A | 84 | B | 24 | C | 24 | C | 13 | E | 102 | B | 102 | B | 56 | B | | | | | | | | | | | | |
| | West | 13 | 38 | C | 35 | C | 12 | E | 38 | C | 33 | C | 12 | E | 19 | D | 18 | D | 6 | E | | | | | | | | | | | | |
| Eighth Ave @ 42nd St | North | 19 | 42 | B | 39 | C | 32 | C | 80 | B | 68 | B | 62 | B | 34 | C | 31 | C | 26 | C | | | | | | | | | | | | |
| | East | 26 | 76 | B | 64 | B | 37 | C | 80 | B | 73 | B | 39 | C | 35 | C | 32 | C | 17 | D | | | | | | | | | | | | |
| | South | 19 | 15 | D | 15 | D | 11 | E | 37 | C | 37 | C | 28 | C | 15 | D | 15 | D | 11 | E | | | | | | | | | | | | |
| | West | 27 | 39 | C | 39 | C | 21 | D | 100 | B | 96 | B | 53 | B | 29 | C | 29 | C | 16 | D | | | | | | | | | | | | |
| Seventh Ave @ 31st St | North | 11 | 38 | C | 38 | C | 23 | D | 68 | B | 68 | B | 41 | B | 31 | C | 31 | C | 18 | D | | | | | | | | | | | | |
| | East | 17 | 79 | B | 79 | B | 24 | C | 72 | B | 72 | B | 21 | D | 58 | B | 58 | B | 17 | D | | | | | | | | | | | | |
| | South | 11 | 59 | B | 54 | B | 29 | C | 78 | B | 71 | B | 39 | C | 31 | C | 29 | C | 16 | D | | | | | | | | | | | | |
| | West | 17 | 63 | B | 55 | B | 22 | D | 117 | B | 109 | B | 42 | B | 52 | B | 48 | B | 18 | D | | | | | | | | | | | | |
| Seventh Ave @ 33rd St | North | 11 | 20 | D | 20 | D | 15 | D | 24 | C | 24 | C | 18 | D | 15 | D | 15 | D | 11 | E | | | | | | | | | | | | |
| | East | 17 | 86 | B | 86 | B | 25 | C | 95 | B | 95 | B | 27 | C | 83 | B | 83 | B | 24 | C | | | | | | | | | | | | |
| | South | 11 | 14 | E | 13 | E | 12 | E | 18 | D | 17 | D | 15 | D | 16 | D | 15 | D | 14 | E | | | | | | | | | | | | |
| | West | 17 | 79 | B | 71 | B | 21 | D | 80 | B | 72 | B | 21 | D | 70 | B | 61 | B | 18 | D | | | | | | | | | | | | |
| Seventh Ave @ 34th St | North | 21 | 55 | B | 55 | B | 29 | C | 57 | B | 57 | B | 30 | C | 238 | A | 238 | A | 125 | B | | | | | | | | | | | | |
| | East | 18 | 90 | B | 90 | B | 39 | C | 94 | B | 94 | B | 40 | B | 237 | A | 237 | A | 102 | B | | | | | | | | | | | | |
| | South | 21 | 49 | B | 47 | B | 26 | C | 99 | B | 95 | B | 52 | B | 184 | A | 169 | A | 97 | B | | | | | | | | | | | | |
| | West | 18 | 31 | C | 31 | C | 13 | E | 77 | B | 77 | B | 33 | C | 177 | A | 177 | A | 76 | B | | | | | | | | | | | | |
| Sixth Ave @ 33rd St | North | 15 | 38 | C | 38 | C | 41 | B | 31 | C | 31 | C | 33 | C | 22 | D | 22 | D | 23 | D | | | | | | | | | | | | |
| | East | 25 | 283 | A | 283 | A | 209 | A | 197 | A | 197 | A | 146 | A | 135 | A | 135 | A | 100 | B | | | | | | | | | | | | |
| | South | 20 | 48 | B | 48 | B | 63 | B | 47 | B | 47 | B | 62 | B | 22 | D | 22 | D | 29 | C | | | | | | | | | | | | |
| | West | 24 | 87 | B | 73 | B | 27 | C | 65 | B | 53 | B | 20 | D | 57 | B | 44 | B | 17 | D | | | | | | | | | | | | |
| Sixth Ave @ 34th St | North | 21 | 43 | B | 43 | B | 55 | B | 17 | D | 17 | D | 22 | D | 18 | D | 17 | D | 23 | D | 66 | B | 66 | B | 85 | B | 36 | C | 36 | C | 47 | B |
| | East | 15 | 49 | B | 48 | B | 21 | D | 28 | C | 28 | C | 12 | E | 34 | C | 34 | C | 14 | E | 95 | B | 94 | B | 40 | B | 50 | B | 50 | B | 21 | D |
| | South | 21 | 35 | C | 35 | C | 37 | C | 17 | D | 17 | D | 18 | D | 18 | D | 18 | D | 19 | D | 48 | B | 48 | B | 50 | B | 29 | C | 29 | C | 30 | C |
| Broadway @ 34th St | North | 21 | 19 | D | 19 | D | 25 | C | 16 | D | 15 | D | 20 | D | 16 | D | 15 | D | 20 | D | 46 | B | 46 | B | 60 | B | 37 | C | 36 | C | 47 | B |
| | South | 21 | 35 | C | 35 | C | 37 | C | 17 | D | 17 | D | 18 | D | 18 | D | 18 | D | 19 | D | 48 | B | 48 | B | 50 | B | 46 | B | 46 | B | 48 | B |
| | West | 28 | 106 | B | 106 | B | 44 | B | 36 | C | 36 | C | 15 | D | 37 | C | 37 | C | 15 | D | 162 | A | 162 | A | 67 | B | 128 | B | 128 | B | 53 | B |

# Appendix S.5.5

**Pedestrian Improvement Analysis - Crosswalk Level of Service**

**2010 Future Conditions (AM)**

| Intersection | Crosswalk Location | 2010 Future without the Proposed Action | | | | 2010 Future with the Proposed Action | | | | | 2010 Future with the Proposed Action (Improvement) | | | | | |
|---|---|---|---|---|---|---|---|---|---|---|---|---|---|---|---|---|
| | | Crosswalk length (Curb-to-Curb | Crosswalk width | Pedestrian Space (s.f./ped.) | Surge Level of Service | Crosswalk length (Curb-to-Curb | Crosswalk width | Pedestrian Space (s.f./ped.) | Surge Level of Service | Impact? | Proposed Crosswalk length | Proposed Crosswalk width | Signal Timing | Pedestrian Space (s.f./ped.) | Surge Level of Service | Still Impact? |
| ***Twelfth Ave @ 30th St*** | NORTH | 0 | 0 | N/A | N/A | 0 | 0 | N/A | N/A | | | | | N/A | N/A | |
| | EAST | 33 | 19 | 4319 | A | 33 | 19 | 2159 | A | | | | | 4319 | A | |
| | SOUTH | 141 | 15 | 1696 | A | 141 | 15 | 1484 | A | | | | | 1484 | A | |
| | WEST | 0 | 0 | N/A | N/A | 0 | 0 | N/A | N/A | | | | | N/A | N/A | |
| ***Twelfth Ave @ 34th St*** | NORTH | 0 | 0 | N/A | N/A | 0 | 0 | N/A | N/A | | | | 33 | N/A | N/A | |
| | EAST | 60 | 14 | 4378 | A | 60 | 14 | 1751 | A | | | | 76 | 2790 | A | |
| | SOUTH | 120 | 15 | 219 | A | 120 | 15 | 211 | A | | | | 33 | 217 | A | |
| | WEST | 0 | 0 | N/A | N/A | 0 | 0 | N/A | N/A | | | | 76 | N/A | N/A | |
| ***Twelfth Ave @ 39th St*** | NORTH | 0 | 0 | N/A | N/A | 131 | 20 | 369 | A | | | | | 369 | A | |
| | EAST | 49 | 11 | 2556 | A | 0 | 0 | N/A | N/A | | | | 95 | N/A | N/A | |
| | SOUTH | 131 | 15 | 284 | A | 0 | 0 | N/A | N/A | | | | | N/A | N/A | |
| | WEST | 0 | 0 | N/A | N/A | 0 | 0 | N/A | N/A | | | | 95 | N/A | N/A | |
| ***Twelfth Ave @ 40th St*** | NORTH | 0 | 0 | N/A | N/A | 0 | 0 | N/A | N/A | | | | | N/A | N/A | |
| | EAST | 38 | 14 | 1917 | A | 0 | 0 | N/A | N/A | | | | | N/A | N/A | |
| | SOUTH | 139 | 15 | 6521 | A | 0 | 0 | N/A | N/A | | | | | N/A | N/A | |
| | WEST | 0 | 0 | N/A | N/A | 0 | 0 | N/A | N/A | | | | | N/A | N/A | |
| ***Twelfth Ave @ 42nd St*** | NORTH | 140 | 15 | 236 | A | 140 | 15 | 232 | A | | | | | 232 | A | |
| | EAST | 70 | 15 | 1055 | A | 70 | 15 | 678 | A | | | | | 678 | A | |
| | SOUTH | 140 | 15 | 216 | A | 140 | 15 | 216 | A | | | | | 216 | A | |
| | WEST | 0 | 0 | N/A | N/A | 0 | 0 | N/A | N/A | | | | | N/A | N/A | |
| ***Eleventh Ave @ 29th St*** | NORTH | 70 | 11 | 3370 | A | 70 | 11 | 361 | A | | | | | 361 | A | |
| | EAST | 34 | 13 | 505 | A | 34 | 13 | 219 | A | | | | | 219 | A | |
| | SOUTH | 70 | 11 | 5054 | A | 70 | 11 | 5054 | A | | | | | 5054 | A | |
| | WEST | 34 | 13 | 1095 | A | 34 | 13 | 547 | A | | | | | 547 | A | |
| ***Eleventh Ave @ 30th St*** | NORTH | 70 | 11 | 1685 | A | 70 | 11 | 326 | A | | | 17 | | 504 | A | |
| | EAST | 34 | 13 | 1095 | A | 34 | 13 | 328 | A | | | 20 | | 505 | A | |
| | SOUTH | 70 | 11 | 5054 | A | 70 | 11 | 505 | A | | | 17 | | 781 | A | |
| | WEST | 34 | 13 | 1095 | A | 34 | 13 | 117 | B | | | 20 | | 180 | A | |
| ***Eleventh Ave @ 33rd St*** | NORTH | 70 | 11 | 4147 | A | 70 | 11 | 296 | A | | | 17 | | 458 | A | |
| | EAST | 34 | 13 | 728 | A | 34 | 13 | 198 | A | | | 20 | | 305 | A | |
| | SOUTH | 70 | 11 | 4147 | A | 70 | 11 | 307 | A | | | 17 | | 475 | A | |
| | WEST | 36 | 13 | 916 | A | 0 | 0 | N/A | N/A | | | | | N/A | N/A | |
| ***Eleventh Ave @ 34th St*** | NORTH | 73 | 18 | 521 | A | 73 | 18 | 95 | B | | | 20 | 41 | 136 | A | |
| | EAST | 59 | 12 | 368 | A | 59 | 12 | 119 | B | | | 20 | 39 | 143 | A | |
| | SOUTH | 71 | 18 | 457 | A | 71 | 18 | 137 | A | | | 20 | 41 | 194 | A | |
| | WEST | 60 | 13 | 692 | A | 60 | 13 | 147 | A | | | 20 | 39 | 162 | A | |
| ***Eleventh Ave @ 35th St*** | NORTH | 87 | 10 | 3608 | A | 87 | 10 | 1804 | A | | | | | 1804 | A | |
| | EAST | 37 | 11 | 460 | A | 37 | 11 | 19 | D | | | | | 19 | D | |
| | SOUTH | 87 | 11 | 5954 | A | 87 | 11 | 225 | A | | | | | 225 | A | |
| | WEST | 0 | 0 | N/A | N/A | 0 | 0 | N/A | N/A | | | | | N/A | N/A | |
| ***Eleventh Ave @ 36th St*** | NORTH | 86 | 11 | 3149 | A | 86 | 11 | 1890 | A | | | | | 1890 | A | |
| | EAST | 35 | 10 | 444 | A | 35 | 10 | 73 | B | | | | | 73 | B | |
| | SOUTH | 87 | 11 | 1907 | A | 87 | 11 | 132 | A | | | | | 132 | A | |
| | WEST | 0 | 0 | N/A | N/A | 0 | 0 | N/A | N/A | | | | | N/A | N/A | |

# Appendix S.5.5

**Pedestrian Improvement Analysis - Crosswalk Level of Service**

**2010 Future Conditions (AM)**

| Intersection | Crosswalk Location | 2010 Future without the Proposed Action | | | | 2010 Future with the Proposed Action | | | | | 2010 Future with the Proposed Action (Improvement) | | | | | |
|---|---|---|---|---|---|---|---|---|---|---|---|---|---|---|---|---|
| | | Crosswalk length (Curb-to-Curb | Crosswalk width | Pedestrian Space (s.f./ped.) | Surge Level of Service | Crosswalk length (Curb-to-Curb | Crosswalk width | Pedestrian Space (s.f./ped.) | Surge Level of Service | Impact? | Proposed Crosswalk length | Proposed Crosswalk width | Signal Timing | Pedestrian Space (s.f./ped.) | Surge Level of Service | Still Impact? |
| ***Eleventh Ave @ 37th St*** | NORTH | 75 | 10 | 1925 | A | 75 | 10 | 1283 | A | | | | | 1283 | A | |
| | EAST | 36 | 8 | 670 | A | 36 | 8 | 116 | B | | | | | 116 | B | |
| | SOUTH | 75 | 10 | 3850 | A | 75 | 10 | 1925 | A | | | | | 1925 | A | |
| | WEST | 0 | 0 | N/A | N/A | 0 | 0 | N/A | N/A | | | | | N/A | N/A | |
| ***Eleventh Ave @ 38th St*** | NORTH | 75 | 9 | 3465 | A | 75 | 9 | 1732 | A | | | | | 1732 | A | |
| | EAST | 38 | 8 | 1722 | A | 38 | 8 | 203 | A | | | | | 203 | A | |
| | SOUTH | 75 | 9 | 3465 | A | 75 | 9 | 1732 | A | | | | | 1732 | A | |
| | WEST | 0 | 0 | N/A | N/A | 0 | 0 | N/A | N/A | | | | 0 | N/A | N/A | |
| ***Eleventh Ave @ 39th St*** | NORTH | 73 | 10 | 2800 | A | 73 | 10 | 1680 | A | | | 17 | | 2856 | A | |
| | EAST | 33 | 11 | 1591 | A | 33 | 11 | 796 | A | | | 20 | | 1446 | A | |
| | SOUTH | 76 | 12 | 400 | A | 76 | 12 | 359 | A | | | 17 | | 508 | A | |
| | WEST | 36 | 13 | 103 | B | 0 | 0 | N/A | N/A | | | | | N/A | N/A | |
| ***Eleventh Ave @ 40th St*** | NORTH | 75 | 11 | 2823 | A | 75 | 11 | 605 | A | | | | | 605 | A | |
| | EAST | 60 | 10 | 3724 | A | 60 | 10 | 1601 | A | | | | | 1601 | A | |
| | SOUTH | 75 | 11 | 4235 | A | 75 | 11 | 4235 | A | | | | | 4235 | A | |
| | WEST | 36 | 13 | 612 | A | 0 | 0 | N/A | N/A | | | | | N/A | N/A | |
| ***Eleventh Ave @ 42nd St*** | NORTH | 70 | 15 | 128 | B | 70 | 15 | 82 | B | | | | | 82 | B | |
| | EAST | 69 | 13 | 204 | A | 69 | 13 | 160 | A | | | | | 160 | A | |
| | SOUTH | 71 | 15 | 124 | B | 71 | 15 | 82 | B | | | | | 82 | B | |
| | WEST | 68 | 14 | 154 | A | 68 | 14 | 107 | B | | | | | 107 | B | |
| ***Tenth Ave @ 29th St*** | NORTH | 70 | 11 | 353 | A | 70 | 11 | 353 | A | | | | | 353 | A | |
| | EAST | 34 | 13 | 291 | A | 34 | 13 | 315 | A | | | | | 315 | A | |
| | SOUTH | 70 | 11 | 245 | A | 70 | 11 | 245 | A | | | | | 245 | A | |
| | WEST | 34 | 13 | 183 | A | 34 | 13 | 167 | A | | | | | 167 | A | |
| ***Tenth Ave @ 30th St*** | NORTH | 71 | 14 | 454 | A | 71 | 14 | 355 | A | | | 17 | | 431 | A | |
| | EAST | 35 | 16 | 320 | A | 35 | 16 | 301 | A | | | 20 | | 376 | A | |
| | SOUTH | 74 | 13 | 519 | A | 74 | 13 | 454 | A | | | 17 | | 594 | A | |
| | WEST | 35 | 18 | 302 | A | 35 | 18 | 272 | A | | | 20 | | 303 | A | |
| ***Tenth Ave @ 31st St*** | NORTH | 70 | 13 | 2085 | A | 70 | 13 | 652 | A | | | 17 | | 852 | A | |
| | EAST | 34 | 12 | 202 | A | 34 | 12 | 182 | A | | | 20 | | 303 | A | |
| | SOUTH | 70 | 11 | 4411 | A | 70 | 11 | 1260 | A | | | 17 | | 1948 | A | |
| | WEST | 0 | 0 | N/A | N/A | 0 | 0 | N/A | N/A | | | | | N/A | N/A | |
| ***Tenth Ave @ 33rd St*** | NORTH | 69 | 12 | 232 | A | 69 | 12 | 86 | B | | | 17 | | 122 | B | |
| | EAST | 32 | 14 | 215 | A | 32 | 14 | 141 | A | | | 20 | | 201 | A | |
| | SOUTH | 71 | 11 | 203 | A | 71 | 11 | 76 | B | | | 17 | | 117 | B | |
| | WEST | 35 | 13 | 268 | A | 35 | 13 | 141 | A | | | 20 | | 217 | A | |
| ***Tenth Ave @ 34th St*** | NORTH | 69 | 18 | 136 | A | 69 | 18 | 65 | B | | | | 33 | 68 | B | |
| | EAST | 59 | 13 | 332 | A | 59 | 13 | 262 | A | | | | 47 | 248 | A | |
| | SOUTH | 68 | 18 | 155 | A | 68 | 18 | 66 | B | | | | 33 | 69 | B | |
| | WEST | 59 | 13 | 397 | A | 59 | 13 | 280 | A | | | | 47 | 265 | A | |
| ***Tenth Ave @ 35th St*** | NORTH | 71 | 11 | 146 | A | 71 | 11 | 59 | B | | | | | 59 | B | |
| | EAST | 34 | 12 | 1211 | A | 34 | 12 | 346 | A | | | | | 346 | A | |
| | SOUTH | 71 | 0 | N/A | N/A | 71 | 12 | 58 | B | | | | | 58 | B | |
| | WEST | 34 | 12 | 427 | A | 34 | 12 | 119 | B | | | | | 119 | B | |

# Appendix S.5.5

**Pedestrian Improvement Analysis - Crosswalk Level of Service**

**2010 Future Conditions (AM)**

| Intersection | Crosswalk Location | 2010 Future without the Proposed Action | | | | 2010 Future with the Proposed Action | | | | | 2010 Future with the Proposed Action (Improvement) | | | | | |
|---|---|---|---|---|---|---|---|---|---|---|---|---|---|---|---|---|
| | | Crosswalk length (Curb-to-Curb | Crosswalk width | Pedestrian Space (s.f./ped.) | Surge Level of Service | Crosswalk length (Curb-to-Curb | Crosswalk width | Pedestrian Space (s.f./ped.) | Surge Level of Service | Impact? | Proposed Crosswalk length | Proposed Crosswalk width | Signal Timing | Pedestrian Space (s.f./ped.) | Surge Level of Service | Still Impact? |
| ***Tenth Ave @ 36th St*** | NORTH | 70 | 10 | 535 | A | 70 | 10 | 382 | A | | | | | 382 | A | |
| | EAST | 37 | 12 | 73 | B | 37 | 12 | 70 | B | | | | | 70 | B | |
| | SOUTH | 70 | 11 | 126 | B | 70 | 11 | 118 | B | | | | | 118 | B | |
| | WEST | 36 | 12 | 106 | B | 36 | 12 | 77 | B | | | | | 77 | B | |
| ***Tenth Ave @ 37th St*** | NORTH | 70 | 10 | 294 | A | 70 | 10 | 211 | A | | | | | 211 | A | |
| | EAST | 36 | 13 | 194 | A | 36 | 13 | 153 | A | | | | | 153 | A | |
| | SOUTH | 70 | 10 | 1029 | A | 70 | 10 | 484 | A | | | | | 484 | A | |
| | WEST | 36 | 13 | 318 | A | 36 | 13 | 181 | A | | | | | 181 | A | |
| ***Tenth Ave @ 38th St*** | NORTH | 70 | 10 | 1002 | A | 70 | 10 | 617 | A | | | | | 617 | A | |
| | EAST | 36 | 13 | 751 | A | 36 | 13 | 435 | A | | | | | 435 | A | |
| | SOUTH | 70 | 10 | 2673 | A | 70 | 10 | 891 | A | | | | | 891 | A | |
| | WEST | 36 | 13 | 590 | A | 36 | 13 | 359 | A | | | | | 359 | A | |
| ***Tenth Ave @ 39th St*** | NORTH | 70 | 13 | 742 | A | 70 | 13 | 586 | A | | | | | 586 | A | |
| | EAST | 36 | 10 | 276 | A | 36 | 10 | 181 | A | | | | | 181 | A | |
| | SOUTH | 70 | 13 | 586 | A | 70 | 13 | 464 | A | | | | | 464 | A | |
| | WEST | 50 | 11 | 761 | A | 50 | 11 | 493 | A | | | | | 493 | A | |
| ***Tenth Ave @ 40th St*** | NORTH | 69.5 | 11 | 863 | A | 69.5 | 11 | 452 | A | | | | | 452 | A | |
| | EAST | 40.3 | 13 | 262 | A | 40.3 | 13 | 173 | A | | | | | 173 | A | |
| | SOUTH | 74.9 | 10 | 1831 | A | 74.9 | 10 | 1144 | A | | | | | 1144 | A | |
| | WEST | 32.7 | 13 | 850 | A | 32.7 | 13 | 486 | A | | | | | 486 | A | |
| ***Tenth Ave @ 41st St*** | NORTH | 68.9 | 13.8 | 265 | A | 68.9 | 13.8 | 180 | A | | | | | 180 | A | |
| | EAST | 60.8 | 13.1 | 278 | A | 60.8 | 13.1 | 154 | A | | | | | 154 | A | |
| | SOUTH | 69.5 | 13.5 | 4437 | A | 69.5 | 13.5 | 1479 | A | | | | | 1479 | A | |
| | WEST | 30 | 11.1 | 221 | A | 30 | 11.1 | 185 | A | | | | | 185 | A | |
| ***Tenth Ave @ 42nd St*** | NORTH | 59.3 | 17.3 | 56 | B | 59.3 | 17.3 | 44 | B | | | | 34 | 48 | B | |
| | EAST | 59.3 | 14.5 | 246 | A | 59.3 | 14.5 | 160 | A | | | | 46 | 144 | A | |
| | SOUTH | 68.4 | 13.8 | 80 | B | 68.4 | 13.8 | 62 | B | | | | 34 | 67 | B | |
| | WEST | 68.2 | 15 | 400 | A | 68.2 | 15 | 349 | A | | | | 46 | 315 | A | |
| ***Dyer @ 42nd St*** | NORTH | 0 | 0 | N/A | N/A | 0 | 0 | N/A | N/A | | | | | N/A | N/A | |
| | EAST | 36 | 13.6 | 890 | A | 36 | 13.6 | 890 | A | | | | | 890 | A | |
| | SOUTH | 40 | 14 | 99 | B | 40 | 14 | 80 | B | | | | | 80 | B | |
| | WEST | 36 | 12 | 1010 | A | 36 | 12 | 1010 | A | | | | | 1010 | A | |
| ***Ninth Ave @ 30th St*** | NORTH | 69.3 | 11.7 | 116 | B | 69.3 | 11.7 | 108 | B | | | | | 108 | B | |
| | EAST | 35.5 | 14.3 | 71 | B | 35.5 | 14.3 | 71 | B | | | | | 71 | B | |
| | SOUTH | 63 | 15.1 | 122 | B | 63 | 15.1 | 118 | B | | | | | 118 | B | |
| | WEST | 97.6 | 14.5 | 70 | B | 97.6 | 14.5 | 70 | B | | | | | 70 | B | |
| ***Ninth Ave @ 31st St*** | NORTH | 73 | 24 | 423 | A | 73 | 24 | 337 | A | | | | | 337 | A | |
| | EAST | 32 | 24 | 85 | B | 32 | 24 | 84 | B | | | | | 84 | B | |
| | SOUTH | 67.2 | 14 | 77 | B | 67.2 | 14 | 74 | B | | | | | 74 | B | |
| | WEST | 35.5 | 13 | 100 | B | 35.5 | 13 | 96 | B | | | | | 96 | B | |
| ***Ninth Ave @ 33rd St*** | NORTH | 68 | 12.5 | 53 | B | 68 | 12.5 | 38 | C | | | 17 | | 52 | B | |
| | EAST | 35.2 | 24 | 90 | B | 35.2 | 24 | 56 | B | | | | | 56 | B | |
| | SOUTH | 68.4 | 24 | 50 | B | 68.4 | 24 | 42 | B | | | | | 42 | B | |
| | WEST | 32.5 | 13.5 | 43 | B | 32.5 | 13.5 | 30 | C | | | 20 | | 45 | B | |

# Appendix S.5.5

**Pedestrian Improvement Analysis - Crosswalk Level of Service**

**2010 Future Conditions (AM)**

| Intersection | Crosswalk Location | 2010 Future without the Proposed Action | | | | 2010 Future with the Proposed Action | | | | | 2010 Future with the Proposed Action (Improvement) | | | | | |
|---|---|---|---|---|---|---|---|---|---|---|---|---|---|---|---|---|
| | | Crosswalk length (Curb-to-Curb | Crosswalk width | Pedestrian Space (s.f./ped.) | Surge Level of Service | Crosswalk length (Curb-to-Curb | Crosswalk width | Pedestrian Space (s.f./ped.) | Surge Level of Service | Impact? | Proposed Crosswalk length | Proposed Crosswalk width | Signal Timing | Pedestrian Space (s.f./ped.) | Surge Level of Service | Still Impact? |
| ***Ninth Ave @ 34th St*** | NORTH | 69.3 | 20 | 67 | B | 69.3 | 20 | 47 | B | | | | | 47 | B | |
| | EAST | 51.7 | 15 | 49 | B | 51.7 | 15 | 45 | B | | | | | 45 | B | |
| | SOUTH | 66.9 | 20 | 55 | B | 66.9 | 20 | 40 | B | | | | | 40 | B | |
| | WEST | 60.5 | 15 | 85 | B | 60.5 | 15 | 78 | B | | | | | 78 | B | |
| ***Ninth Ave @ 37th St*** | NORTH | 70 | 10 | 401 | A | 70 | 10 | 297 | A | | | | | 297 | A | |
| | EAST | 36 | 13 | 52 | B | 36 | 13 | 50 | B | | | | | 50 | B | |
| | SOUTH | 70 | 10 | 382 | A | 70 | 10 | 286 | A | | | | | 286 | A | |
| | WEST | 36 | 13 | 31 | C | 36 | 13 | 30 | C | | | | | 30 | C | |
| ***Ninth Ave @ 38th St*** | NORTH | 70 | 9 | 481 | A | 70 | 9 | 278 | A | | | | | 278 | A | |
| | EAST | 37 | 13 | 56 | B | 37 | 13 | 52 | B | | | | | 52 | B | |
| | SOUTH | 70 | 9 | 481 | A | 70 | 9 | 226 | A | | | | | 226 | A | |
| | WEST | 37 | 13 | 128 | B | 37 | 13 | 119 | B | | | | | 119 | B | |
| ***Ninth Ave @ 39th St*** | NORTH | 70 | 10 | 200 | A | 70 | 10 | 182 | A | | | | | 182 | A | |
| | EAST | 36 | 13 | 52 | B | 36 | 13 | 50 | B | | | | | 50 | B | |
| | SOUTH | 70 | 10 | 160 | A | 70 | 10 | 157 | A | | | | | 157 | A | |
| | WEST | 36 | 13 | 110 | B | 36 | 13 | 112 | B | | | | | 112 | B | |
| ***Ninth Ave @ 42nd St*** | NORTH | 69 | 14.7 | 41 | B | 69 | 14.7 | 28 | C | | | | | 28 | C | |
| | EAST | 60.8 | 13.8 | 41 | B | 60.8 | 13.8 | 40 | B | | | | | 40 | B | |
| | SOUTH | 70.5 | 10 | 31 | C | 70.5 | 10 | 16 | D | | | 17 | | 27 | C | |
| | WEST | 59.2 | 12.5 | 51 | B | 59.2 | 12.5 | 27 | C | | | | | 27 | C | |
| ***Eighth Ave @ 30th St*** | NORTH | 69.2 | 12 | 152 | A | 69.2 | 12 | 140 | A | | | | | 140 | A | |
| | EAST | 31.3 | 12.6 | 33 | C | 31.3 | 12.6 | 33 | C | | | 20 | | 53 | B | |
| | SOUTH | 70.1 | 11.5 | 210 | A | 70.1 | 11.5 | 190 | A | | | | | 190 | A | |
| | WEST | 32.9 | 12.5 | 46 | B | 32.9 | 12.5 | 46 | B | | | 20 | | 74 | B | |
| ***Eighth Ave @ 31st St*** | NORTH | 70 | 24 | 82 | B | 70 | 24 | 80 | B | | | | | 80 | B | |
| | EAST | 42 | 14.5 | 31 | C | 42 | 14.5 | 31 | C | | | 20 | | 42 | B | |
| | SOUTH | 70 | 14.5 | 113 | B | 70 | 14.5 | 108 | B | | | | | 108 | B | |
| | WEST | 34 | 24 | 70 | B | 34 | 24 | 70 | B | | | | | 70 | B | |
| ***Eighth Ave @ 33rd St*** | NORTH | 66.4 | 14.5 | 27 | C | 66.4 | 14.5 | 25 | C | | | 17 | | 30 | C | |
| | EAST | 31.7 | 20 | 21 | D | 31.7 | 20 | 20 | D | | | | | 20 | D | |
| | SOUTH | 70.2 | 24 | 35 | C | 70.2 | 24 | 34 | C | | | | | 34 | C | |
| | WEST | 32.5 | 24 | 10 | E | 32.5 | 24 | 10 | E | | | | | 10 | E | |
| ***Eighth Ave @ 34th St*** | NORTH | 66.8 | 20 | 54 | B | 66.8 | 20 | 44 | B | | | | 32 | 39 | C | |
| | EAST | 53.5 | 13 | 32 | C | 53.5 | 13 | 28 | C | | | 20 | 34 | 39 | C | |
| | SOUTH | 67.7 | 20 | 55 | B | 67.7 | 20 | 47 | B | | | | 32 | 42 | B | |
| | WEST | 54.3 | 13 | 27 | C | 54.3 | 13 | 23 | D | | | 20 | 34 | 33 | C | |
| ***Eighth Ave @ 37th St*** | NORTH | 70 | 11 | 105 | B | 70 | 11 | 101 | B | | | | | 101 | B | |
| | EAST | 36 | 13 | 22 | D | 36 | 13 | 21 | D | | | 20 | | 33 | C | |
| | SOUTH | 70 | 11 | 96 | B | 70 | 11 | 90 | B | | | | | 90 | B | |
| | WEST | 35 | 13 | 16 | D | 35 | 13 | 16 | D | | | 20 | | 24 | C | |
| ***Eighth Ave @ 38th St*** | NORTH | 70 | 12 | 238 | A | 70 | 12 | 195 | A | | | | | 195 | A | |
| | EAST | 36 | 15 | 59 | B | 36 | 15 | 56 | B | | | 20 | | 75 | B | |
| | SOUTH | 70 | 12 | 198 | A | 70 | 12 | 170 | A | | | | | 170 | A | |
| | WEST | 38 | 15 | 37 | C | 38 | 15 | 36 | C | | | 20 | | 47 | B | |

# Appendix S.5.5

**Pedestrian Improvement Analysis - Crosswalk Level of Service**

**2010 Future Conditions (AM)**

| Intersection | Crosswalk Location | 2010 Future without the Proposed Action | | | | 2010 Future with the Proposed Action | | | | | 2010 Future with the Proposed Action (Improvement) | | | | | |
|---|---|---|---|---|---|---|---|---|---|---|---|---|---|---|---|---|
| | | Crosswalk length (Curb-to-Curb | Crosswalk width | Pedestrian Space (s.f./ped.) | Surge Level of Service | Crosswalk length (Curb-to-Curb | Crosswalk width | Pedestrian Space (s.f./ped.) | Surge Level of Service | Impact? | Proposed Crosswalk length | Proposed Crosswalk width | Signal Timing | Pedestrian Space (s.f./ped.) | Surge Level of Service | Still Impact? |
| ***Eighth Ave @ 39th St*** | NORTH | 70 | 10 | 71 | B | 70 | 10 | 69 | B | | | | | 69 | B | |
| | EAST | 36 | 13 | 9 | E | 36 | 13 | 9 | E | | | 20 | | 15 | D | |
| | SOUTH | 70 | 10 | 64 | B | 70 | 10 | 61 | B | | | | | 61 | B | |
| | WEST | 36 | 13 | 12 | E | 36 | 13 | 11 | E | Yes | | 20 | | 17 | D | |
| ***Eighth Ave @ 42nd St*** | NORTH | 71 | 19 | 24 | C | 71 | 19 | 22 | D | | | 20 | | 23 | D | |
| | EAST | 55 | 26 | 33 | C | 55 | 26 | 32 | C | | | | | 32 | C | |
| | SOUTH | 69 | 19 | 10 | E | 69 | 19 | 9 | E | Yes | | 20 | | 10 | E | |
| | WEST | 60 | 27 | 19 | D | 60 | 27 | 18 | D | | | | | 18 | D | |
| ***Seventh Ave @ 31st St*** | NORTH | 75 | 11 | 18 | D | 75 | 11 | 17 | D | | | 17 | | 27 | C | |
| | EAST | 34 | 17 | 22 | D | 34 | 17 | 22 | D | | | 23 | | 30 | C | |
| | SOUTH | 60 | 11 | 28 | C | 60 | 11 | 28 | C | | | 17 | | 43 | B | |
| | WEST | 42 | 17 | 21 | D | 42 | 17 | 21 | D | | | 23 | | 29 | C | |
| ***Seventh Ave @ 33rd St*** | NORTH | 60 | 11 | 11 | E | 60 | 11 | 11 | E | | | 17 | | 17 | D | |
| | EAST | 34 | 17 | 21 | D | 34 | 17 | 20 | D | | | | | 20 | D | |
| | SOUTH | 70 | 11 | 9 | E | 70 | 11 | 9 | E | | | 17 | | 14 | E | |
| | WEST | 30 | 17 | 17 | D | 30 | 17 | 16 | D | | | 20 | | 19 | D | |
| ***Seventh Ave @ 34th St*** | NORTH | 60 | 21 | 26 | C | 60 | 21 | 25 | C | | | | | 25 | C | |
| | EAST | 54 | 18 | 34 | C | 54 | 18 | 33 | C | | | | | 33 | C | |
| | SOUTH | 60 | 21 | 22 | D | 60 | 21 | 21 | D | | | | | 21 | D | |
| | WEST | 54 | 18 | 13 | E | 54 | 18 | 13 | E | | | | | 13 | E | |
| ***Sixth Ave @ 33rd St*** | NORTH | 120 | 15 | 39 | C | 120 | 15 | 39 | C | | | | | 39 | C | |
| | EAST | 34 | 25 | 201 | A | 34 | 25 | 201 | A | | | | | 201 | A | |
| | SOUTH | 160 | 20 | 58 | B | 160 | 20 | 57 | B | | | | | 57 | B | |
| | WEST | 34 | 24 | 24 | C | 34 | 24 | 24 | C | | | | | 24 | C | |
| ***Sixth Ave @ 34th St*** | NORTH | 156 | 21 | 51 | B | 156 | 21 | 50 | B | | | | | 50 | B | |
| | EAST | 54 | 15 | 20 | D | 54 | 15 | 20 | D | | | | | 20 | D | |
| | SOUTH | 116 | 21 | 35 | C | 116 | 21 | 34 | C | | | | | 34 | C | |
| | WEST | 0 | 0 | N/A | N/A | 0 | 0 | N/A | N/A | | | | | N/A | N/A | |
| ***Broadway @ 34th St*** | NORTH | 156 | 21 | 23 | D | 156 | 21 | 23 | D | | | | | 23 | D | |
| | EAST | 0 | 0 | N/A | N/A | 0 | 0 | N/A | N/A | | | | | N/A | N/A | |
| | SOUTH | 116 | 21 | 35 | C | 116 | 21 | 34 | C | | | | | 34 | C | |
| | WEST | 54 | 28 | 42 | B | 54 | 28 | 42 | B | | | | | 42 | B | |
| ***Blvd @ 33rd St*** | NORTH | 0 | 0 | N/A | N/A | 30 | 20 | 111 | B | | | | 30 | 111 | B | |
| | EAST | 0 | 0 | N/A | N/A | 35 | 20 | 443 | A | | | | 50 | 443 | A | |
| | SOUTH | 0 | 0 | N/A | N/A | 0 | 0 | N/A | N/A | | | | | N/A | N/A | |
| | WEST | 0 | 0 | N/A | N/A | 35 | 20 | 185 | A | | | | 50 | 185 | A | |
| ***Blvd @ 34th St*** | NORTH | 0 | 0 | N/A | N/A | 30 | 20 | 29 | C | | | | | 29 | C | |
| | EAST | 0 | 0 | N/A | N/A | 59 | 20 | 208 | A | | | | | 208 | A | |
| | SOUTH | 0 | 0 | N/A | N/A | 30 | 20 | 18 | D | | | | | 18 | D | |
| | WEST | 0 | 0 | N/A | N/A | 59 | 20 | 43 | B | | | | | 43 | B | |

# Appendix S.5.5

**Pedestrian Improvement Analysis - Crosswalk Level of Service**

**2010 Future Conditions (MD)**

| Intersection | Crosswalk Location | 2010 Future without the Proposed Action | | | | 2010 Future with the Proposed Action | | | | | 2010 Future with the Proposed Action (Improvement) | | | | | |
|---|---|---|---|---|---|---|---|---|---|---|---|---|---|---|---|---|
| | | Crosswalk length (Curb-to-Curb | Crosswalk width | Pedestrian Space (s.f./ped.) | Surge Level of Service | Crosswalk length (Curb-to-Curb | Crosswalk width | Pedestrian Space (s.f./ped.) | Surge Level of Service | Impact? | Proposed Crosswalk length | Proposed Crosswalk width | Signal Timing | Pedestrian Space (s.f./ped.) | Surge Level of Service | Still Impact? |
| ***Twelfth Ave @ 30th St*** | NORTH | 0 | 0 | N/A | N/A | 0 | 0 | N/A | N/A | | | | | N/A | N/A | |
| | EAST | 33 | 19 | 3118 | A | 33 | 19 | 3118 | A | | | | 69 | 3067 | A | |
| | SOUTH | 141 | 15 | 7302 | A | 141 | 15 | 7302 | A | | | | | 7302 | A | |
| | WEST | 0 | 0 | N/A | N/A | 0 | 0 | N/A | N/A | | | | 69 | N/A | N/A | |
| ***Twelfth Ave @ 34th St*** | NORTH | 0 | 0 | N/A | N/A | 0 | 0 | N/A | N/A | | | | | N/A | N/A | |
| | EAST | 60 | 14 | 2476 | A | 60 | 14 | 1415 | A | | | | | 1981 | A | |
| | SOUTH | 120 | 15 | 127 | B | 120 | 15 | 123 | B | | | | | 123 | B | |
| | WEST | 0 | 0 | N/A | N/A | 0 | 0 | N/A | N/A | | | | | N/A | N/A | |
| ***Twelfth Ave @ 39th St*** | NORTH | 0 | 0 | N/A | N/A | 131 | 20 | 288 | A | | | | | 288 | A | |
| | EAST | 49 | 11 | 635 | A | 0 | 0 | N/A | N/A | | | | 67 | N/A | N/A | |
| | SOUTH | 131 | 15 | 226 | A | 0 | 0 | N/A | N/A | | | | | N/A | N/A | |
| | WEST | 0 | 0 | N/A | N/A | 0 | 0 | N/A | N/A | | | | 67 | N/A | N/A | |
| ***Twelfth Ave @ 40th St*** | NORTH | 0 | 0 | N/A | N/A | 0 | 0 | N/A | N/A | | | | | N/A | N/A | |
| | EAST | 38 | 14 | 1792 | A | 0 | 0 | N/A | N/A | | | | | N/A | N/A | |
| | SOUTH | 139 | 15 | 15270 | A | 0 | 0 | N/A | N/A | | | | | N/A | N/A | |
| | WEST | 0 | 0 | N/A | N/A | 0 | 0 | N/A | N/A | | | | | N/A | N/A | |
| ***Twelfth Ave @ 42nd St*** | NORTH | 140 | 15 | 139 | A | 140 | 15 | 138 | A | | | | | 138 | A | |
| | EAST | 70 | 15 | 842 | A | 70 | 15 | 673 | A | | | | | 673 | A | |
| | SOUTH | 140 | 15 | 156 | A | 140 | 15 | 156 | A | | | | | 156 | A | |
| | WEST | 0 | 0 | N/A | N/A | 0 | 0 | N/A | N/A | | | | | N/A | N/A | |
| ***Eleventh Ave @ 29th St*** | NORTH | 70 | 11 | 3370 | A | 70 | 11 | 562 | A | | | | | 562 | A | |
| | EAST | 34 | 13 | 81 | B | 34 | 13 | 55 | B | | | | | 55 | B | |
| | SOUTH | 70 | 11 | 3370 | A | 70 | 11 | 3370 | A | | | | | 3370 | A | |
| | WEST | 34 | 13 | 188 | A | 34 | 13 | 113 | B | | | | | 113 | B | |
| ***Eleventh Ave @ 30th St*** | NORTH | 70 | 11 | 151 | A | 70 | 11 | 122 | B | | | 17 | | 188 | A | |
| | EAST | 34 | 13 | 98 | B | 34 | 13 | 49 | B | | | 20 | | 75 | B | |
| | SOUTH | 70 | 11 | 3370 | A | 70 | 11 | 722 | A | | | 17 | | 1116 | A | |
| | WEST | 34 | 13 | 124 | B | 34 | 13 | 57 | B | | | 20 | | 87 | B | |
| ***Eleventh Ave @ 33rd St*** | NORTH | 70 | 11 | 2765 | A | 70 | 11 | 276 | A | | | 17 | | 427 | A | |
| | EAST | 34 | 13 | 282 | A | 34 | 13 | 68 | B | | | 20 | | 104 | B | |
| | SOUTH | 70 | 11 | 4147 | A | 70 | 11 | 332 | A | | | 17 | | 513 | A | |
| | WEST | 36 | 13 | 2289 | A | 0 | 0 | N/A | N/A | | | | | N/A | N/A | |
| ***Eleventh Ave @ 34th St*** | NORTH | 73 | 18 | 203 | A | 73 | 18 | 101 | B | | | 20 | 43 | 139 | A | |
| | EAST | 59 | 12 | 80 | B | 59 | 12 | 39 | C | | | 20 | 37 | 50 | B | |
| | SOUTH | 71 | 18 | 216 | A | 71 | 18 | 93 | B | | | 20 | 43 | 128 | B | |
| | WEST | 60 | 13 | 263 | A | 60 | 13 | 88 | B | | | 20 | 37 | 105 | B | |
| ***Eleventh Ave @ 35th St*** | NORTH | 87 | 10 | 1804 | A | 87 | 10 | 492 | A | | | | | 492 | A | |
| | EAST | 37 | 11 | 51 | B | 37 | 11 | 24 | C | | | | | 24 | C | |
| | SOUTH | 87 | 11 | 2977 | A | 87 | 11 | 155 | A | | | | | 155 | A | |
| | WEST | 0 | 0 | N/A | N/A | 0 | 0 | N/A | N/A | | | | | N/A | N/A | |
| ***Eleventh Ave @ 36th St*** | NORTH | 86 | 11 | 3149 | A | 86 | 11 | 1050 | A | | | | | 859 | A | |
| | EAST | 35 | 10 | 39 | C | 35 | 10 | 22 | D | | | | | 22 | D | |
| | SOUTH | 87 | 11 | 1907 | A | 87 | 11 | 151 | A | | | | | 151 | A | |
| | WEST | 0 | 0 | N/A | N/A | 0 | 0 | N/A | N/A | | | | | N/A | N/A | |

# Appendix S.5.5

**Pedestrian Improvement Analysis - Crosswalk Level of Service**

**2010 Future Conditions (MD)**

| Intersection | Crosswalk Location | 2010 Future without the Proposed Action | | | | 2010 Future with the Proposed Action | | | | | 2010 Future with the Proposed Action (Improvement) | | | | | |
|---|---|---|---|---|---|---|---|---|---|---|---|---|---|---|---|---|
| | | Crosswalk length (Curb-to-Curb | Crosswalk width | Pedestrian Space (s.f./ped.) | Surge Level of Service | Crosswalk length (Curb-to-Curb | Crosswalk width | Pedestrian Space (s.f./ped.) | Surge Level of Service | Impact? | Proposed Crosswalk length | Proposed Crosswalk width | Signal Timing | Pedestrian Space (s.f./ped.) | Surge Level of Service | Still Impact? |
| ***Eleventh Ave @ 37th St*** | NORTH | 75 | 10 | 3850 | A | 75 | 10 | 770 | A | | | | | 770 | A | |
| | EAST | 36 | 8 | 65 | B | 36 | 8 | 39 | C | | | | | 39 | C | |
| | SOUTH | 75 | 10 | 513 | A | 75 | 10 | 335 | A | | | | | 335 | A | |
| | WEST | 0 | 0 | N/A | N/A | 0 | 0 | N/A | N/A | | | | | N/A | N/A | |
| ***Eleventh Ave @ 38th St*** | NORTH | 75 | 9 | 462 | A | 75 | 9 | 267 | A | | | | | 267 | A | |
| | EAST | 38 | 8 | 383 | A | 38 | 8 | 68 | B | | | | | 68 | B | |
| | SOUTH | 75 | 9 | 2310 | A | 75 | 9 | 693 | A | | | | | 693 | A | |
| | WEST | 0 | 0 | N/A | N/A | 0 | 0 | N/A | N/A | | | | | N/A | N/A | |
| ***Eleventh Ave @ 39th St*** | NORTH | 73 | 10 | 442 | A | 73 | 10 | 311 | A | | | 17 | 43 | 625 | A | |
| | EAST | 33 | 11 | 1273 | A | 33 | 11 | 236 | A | | | 20 | 37 | 347 | A | |
| | SOUTH | 76 | 12 | 168 | A | 76 | 12 | 147 | A | | | 17 | 43 | 245 | A | |
| | WEST | 36 | 13 | 900 | A | 0 | 0 | N/A | N/A | | | | 37 | N/A | N/A | |
| ***Eleventh Ave @ 40th St*** | NORTH | 75 | 11 | 2823 | A | 75 | 11 | 217 | A | | | | | 217 | A | |
| | EAST | 60 | 10 | 2234 | A | 60 | 10 | 377 | A | | | | | 377 | A | |
| | SOUTH | 75 | 11 | 1694 | A | 75 | 11 | 1694 | A | | | | | 1694 | A | |
| | WEST | 36 | 13 | 890 | A | 0 | 0 | N/A | N/A | | | | | N/A | N/A | |
| ***Eleventh Ave @ 42nd St*** | NORTH | 70 | 15 | 73 | B | 70 | 15 | 47 | B | | | | 34 | 48 | B | |
| | EAST | 69 | 13 | 262 | A | 69 | 13 | 143 | A | | | | 34 | 141 | A | |
| | SOUTH | 71 | 15 | 88 | B | 71 | 15 | 45 | B | | | | 34 | 45 | B | |
| | WEST | 68 | 14 | 335 | A | 68 | 14 | 129 | B | | | | 34 | 127 | B | |
| ***Tenth Ave @ 29th St*** | NORTH | 70 | 11 | 155 | A | 70 | 11 | 140 | A | | | | | 140 | A | |
| | EAST | 34 | 13 | 84 | B | 34 | 13 | 74 | B | | | | | 74 | B | |
| | SOUTH | 70 | 11 | 109 | B | 70 | 11 | 101 | B | | | | | 101 | B | |
| | WEST | 34 | 13 | 69 | B | 34 | 13 | 55 | B | | | | | 55 | B | |
| ***Tenth Ave @ 30th St*** | NORTH | 71 | 14 | 65 | B | 71 | 14 | 56 | B | | | 17 | | 69 | B | |
| | EAST | 35 | 16 | 115 | B | 35 | 16 | 89 | B | | | 20 | | 111 | B | |
| | SOUTH | 74 | 13 | 242 | A | 74 | 13 | 165 | A | | | 17 | | 216 | A | |
| | WEST | 35 | 18 | 99 | B | 35 | 18 | 63 | B | | | 20 | | 70 | B | |
| ***Tenth Ave @ 31st St*** | NORTH | 70 | 13 | 171 | A | 70 | 13 | 117 | B | | | 17 | | 153 | A | |
| | EAST | 34 | 12 | 65 | B | 34 | 12 | 53 | B | | | 20 | | 88 | B | |
| | SOUTH | 70 | 11 | 1260 | A | 70 | 11 | 304 | A | | | 17 | | 470 | A | |
| | WEST | 0 | 0 | N/A | N/A | 0 | 0 | N/A | N/A | | | | | N/A | N/A | |
| ***Tenth Ave @ 33rd St*** | NORTH | 69 | 12 | 37 | C | 69 | 12 | 32 | C | | | 17 | | 46 | B | |
| | EAST | 32 | 14 | 59 | B | 32 | 14 | 45 | B | | | 20 | | 64 | B | |
| | SOUTH | 71 | 11 | 36 | C | 71 | 11 | 31 | C | | | 17 | | 48 | B | |
| | WEST | 35 | 13 | 48 | B | 35 | 13 | 26 | C | | | 20 | | 40 | B | |
| ***Tenth Ave @ 34th St*** | NORTH | 69 | 18 | 96 | B | 69 | 18 | 48 | B | | | | 33 | 50 | B | |
| | EAST | 59 | 13 | 118 | B | 59 | 13 | 72 | B | | | | 47 | 68 | B | |
| | SOUTH | 68 | 18 | 105 | B | 68 | 18 | 46 | B | | | | 33 | 48 | B | |
| | WEST | 59 | 13 | 103 | B | 59 | 13 | 46 | B | | | | 47 | 44 | B | |
| ***Tenth Ave @ 35th St*** | NORTH | 71 | 11 | 122 | B | 71 | 11 | 86 | B | | | | | 86 | B | |
| | EAST | 34 | 12 | 99 | B | 34 | 12 | 52 | B | | | | | 52 | B | |
| | SOUTH | 71 | 0 | N/A | N/A | 71 | 12 | 34 | C | | | | | 34 | C | |
| | WEST | 34 | 12 | 77 | B | 34 | 12 | 19 | D | | | | | 19 | D | |

# Appendix S.5.5

**Pedestrian Improvement Analysis - Crosswalk Level of Service**

**2010 Future Conditions (MD)**

| Intersection | Crosswalk Location | 2010 Future without the Proposed Action | | | | 2010 Future with the Proposed Action | | | | | 2010 Future with the Proposed Action (Improvement) | | | | | |
|---|---|---|---|---|---|---|---|---|---|---|---|---|---|---|---|---|
| | | Crosswalk length (Curb-to-Curb | Crosswalk width | Pedestrian Space (s.f./ped.) | Surge Level of Service | Crosswalk length (Curb-to-Curb | Crosswalk width | Pedestrian Space (s.f./ped.) | Surge Level of Service | Impact? | Proposed Crosswalk length | Proposed Crosswalk width | Signal Timing | Pedestrian Space (s.f./ped.) | Surge Level of Service | Still Impact? |
| ***Tenth Ave @ 36th St*** | NORTH | 70 | 10 | 146 | A | 70 | 10 | 97 | B | | | | | 97 | B | |
| | EAST | 37 | 12 | 177 | A | 37 | 12 | 80 | B | | | | | 80 | B | |
| | SOUTH | 70 | 11 | 276 | A | 70 | 11 | 147 | A | | | | | 147 | A | |
| | WEST | 36 | 12 | 116 | B | 36 | 12 | 25 | C | | | | | 25 | C | |
| ***Tenth Ave @ 37th St*** | NORTH | 70 | 10 | 187 | A | 70 | 10 | 103 | B | | | | | 103 | B | |
| | EAST | 36 | 13 | 142 | A | 36 | 13 | 75 | B | | | | | 75 | B | |
| | SOUTH | 70 | 10 | 343 | A | 70 | 10 | 155 | A | | | | | 155 | A | |
| | WEST | 36 | 13 | 139 | A | 36 | 13 | 34 | C | | | | | 34 | C | |
| ***Tenth Ave @ 38th St*** | NORTH | 70 | 10 | 259 | A | 70 | 10 | 131 | A | | | | | 131 | A | |
| | EAST | 36 | 13 | 172 | A | 36 | 13 | 79 | B | | | | | 79 | B | |
| | SOUTH | 70 | 10 | 382 | A | 70 | 10 | 164 | A | | | | | 164 | A | |
| | WEST | 36 | 13 | 201 | A | 36 | 13 | 55 | B | | | | | 55 | B | |
| ***Tenth Ave @ 39th St*** | NORTH | 70 | 13 | 242 | A | 70 | 13 | 155 | A | | | | | 155 | A | |
| | EAST | 36 | 10 | 96 | B | 36 | 10 | 45 | B | | | | | 45 | B | |
| | SOUTH | 70 | 13 | 293 | A | 70 | 13 | 169 | A | | | | | 169 | A | |
| | WEST | 50 | 11 | 164 | A | 50 | 11 | 87 | B | | | | | 87 | B | |
| ***Tenth Ave @ 40th St*** | NORTH | 69.5 | 11 | 190 | A | 69.5 | 11 | 119 | B | | | | | 119 | B | |
| | EAST | 40.3 | 13 | 370 | A | 40.3 | 13 | 87 | B | | | | | 87 | B | |
| | SOUTH | 74.9 | 10 | 538 | A | 74.9 | 10 | 366 | A | | | | | 366 | A | |
| | WEST | 32.7 | 13 | 139 | A | 32.7 | 13 | 100 | B | | | | | 100 | B | |
| ***Tenth Ave @ 41st St*** | NORTH | 68.9 | 13.8 | 225 | A | 68.9 | 13.8 | 106 | B | | | | | 106 | B | |
| | EAST | 60.8 | 13.1 | 182 | A | 60.8 | 13.1 | 70 | B | | | | | 70 | B | |
| | SOUTH | 69.5 | 13.5 | 296 | A | 69.5 | 13.5 | 218 | A | | | | | 218 | A | |
| | WEST | 30 | 11.1 | 71 | B | 30 | 11.1 | 59 | B | | | | | 59 | B | |
| ***Tenth Ave @ 42nd St*** | NORTH | 59.3 | 17.3 | 44 | B | 59.3 | 17.3 | 34 | C | | | | | 34 | C | |
| | EAST | 59.3 | 14.5 | 174 | A | 59.3 | 14.5 | 64 | B | | | | | 64 | B | |
| | SOUTH | 68.4 | 13.8 | 50 | B | 68.4 | 13.8 | 28 | C | | | | | 28 | C | |
| | WEST | 68.2 | 15 | 178 | A | 68.2 | 15 | 144 | A | | | | | 144 | A | |
| ***Dyer @ 42nd St*** | NORTH | 0 | 0 | N/A | N/A | 0 | 0 | N/A | N/A | | | | | N/A | N/A | |
| | EAST | 36 | 13.6 | 1335 | A | 36 | 13.6 | 1335 | A | | | | | 1335 | A | |
| | SOUTH | 40 | 14 | 83 | B | 40 | 14 | 83 | B | | | | | 83 | B | |
| | WEST | 36 | 12 | 1414 | A | 36 | 12 | 1414 | A | | | | | 1414 | A | |
| ***Ninth Ave @ 30th St*** | NORTH | 69.3 | 11.7 | 52 | B | 69.3 | 11.7 | 51 | B | | | | | 51 | B | |
| | EAST | 35.5 | 14.3 | 21 | D | 35.5 | 14.3 | 21 | D | | | | | 21 | D | |
| | SOUTH | 63 | 15.1 | 145 | A | 63 | 15.1 | 142 | A | | | | | 142 | A | |
| | WEST | 97.6 | 14.5 | 61 | B | 97.6 | 14.5 | 59 | B | | | | | 59 | B | |
| ***Ninth Ave @ 31st St*** | NORTH | 73 | 24 | 58 | B | 73 | 24 | 56 | B | | | | | 56 | B | |
| | EAST | 32 | 24 | 22 | D | 32 | 24 | 21 | D | | | | | 21 | D | |
| | SOUTH | 67.2 | 14 | 49 | B | 67.2 | 14 | 47 | B | | | | | 47 | B | |
| | WEST | 35.5 | 13 | 40 | B | 35.5 | 13 | 35 | C | | | | | 35 | C | |
| ***Ninth Ave @ 33rd St*** | NORTH | 68 | 12.5 | 34 | C | 68 | 12.5 | 32 | C | | | 17 | | 44 | B | |
| | EAST | 35.2 | 24 | 20 | D | 35.2 | 24 | 19 | D | | | | | 19 | D | |
| | SOUTH | 68.4 | 24 | 35 | C | 68.4 | 24 | 33 | C | | | | | 33 | C | |
| | WEST | 32.5 | 13.5 | 23 | D | 32.5 | 13.5 | 21 | D | | | 20 | | 30 | C | |

# Appendix S.5.5

**Pedestrian Improvement Analysis - Crosswalk Level of Service**

**2010 Future Conditions (MD)**

| Intersection | Crosswalk Location | 2010 Future without the Proposed Action | | | | 2010 Future with the Proposed Action | | | | | 2010 Future with the Proposed Action (Improvement) | | | | | |
|---|---|---|---|---|---|---|---|---|---|---|---|---|---|---|---|---|
| | | Crosswalk length (Curb-to-Curb | Crosswalk width | Pedestrian Space (s.f./ped.) | Surge Level of Service | Crosswalk length (Curb-to-Curb | Crosswalk width | Pedestrian Space (s.f./ped.) | Surge Level of Service | Impact? | Proposed Crosswalk length | Proposed Crosswalk width | Signal Timing | Pedestrian Space (s.f./ped.) | Surge Level of Service | Still Impact? |
| ***Ninth Ave @ 34th St*** | NORTH | 69.3 | 20 | 51 | B | 69.3 | 20 | 44 | B | | | | 33 | 45 | B | |
| | EAST | 51.7 | 15 | 18 | D | 51.7 | 15 | 18 | D | | | | 32 | 17 | D | |
| | SOUTH | 66.9 | 20 | 54 | B | 66.9 | 20 | 40 | B | | | | 33 | 42 | B | |
| | WEST | 60.5 | 15 | 42 | B | 60.5 | 15 | 41 | B | | | | 32 | 40 | B | |
| ***Ninth Ave @ 37th St*** | NORTH | 70 | 10 | 90 | B | 70 | 10 | 76 | B | | | | | 76 | B | |
| | EAST | 36 | 13 | 34 | C | 36 | 13 | 29 | C | | | | | 29 | C | |
| | SOUTH | 70 | 10 | 129 | B | 70 | 10 | 106 | B | | | | | 106 | B | |
| | WEST | 36 | 13 | 28 | C | 36 | 13 | 25 | C | | | | | 25 | C | |
| ***Ninth Ave @ 38th St*** | NORTH | 70 | 9 | 344 | A | 70 | 9 | 226 | A | | | | 31 | 228 | A | |
| | EAST | 37 | 13 | 79 | B | 37 | 13 | 58 | B | | | | 49 | 57 | B | |
| | SOUTH | 70 | 9 | 314 | A | 70 | 9 | 157 | A | | | | 31 | 159 | A | |
| | WEST | 37 | 13 | 69 | B | 37 | 13 | 65 | B | | | | 49 | 64 | B | |
| ***Ninth Ave @ 39th St*** | NORTH | 70 | 10 | 113 | B | 70 | 10 | 100 | B | | | | | 100 | B | |
| | EAST | 36 | 13 | 43 | B | 36 | 13 | 38 | C | | | | | 38 | C | |
| | SOUTH | 70 | 10 | 79 | B | 70 | 10 | 76 | B | | | | | 76 | B | |
| | WEST | 36 | 13 | 120 | B | 36 | 13 | 109 | B | | | | | 109 | B | |
| ***Ninth Ave @ 42nd St*** | NORTH | 69 | 14.7 | 32 | C | 69 | 14.7 | 25 | C | | | | 28 | 25 | C | |
| | EAST | 60.8 | 13.8 | 33 | C | 60.8 | 13.8 | 31 | C | | | | | 31 | C | |
| | SOUTH | 70.5 | 10 | 20 | D | 70.5 | 10 | 13 | E | Yes | | 17 | 28 | 22 | D | |
| | WEST | 59.2 | 12.5 | 34 | C | 59.2 | 12.5 | 26 | C | | | | | 26 | C | |
| ***Eighth Ave @ 30th St*** | NORTH | 69.2 | 12 | 119 | B | 69.2 | 12 | 114 | B | | | | | 114 | B | |
| | EAST | 31.3 | 12.6 | 24 | C | 31.3 | 12.6 | 24 | C | | | 20 | | 38 | C | |
| | SOUTH | 70.1 | 11.5 | 123 | B | 70.1 | 11.5 | 120 | B | | | | | 120 | B | |
| | WEST | 32.9 | 12.5 | 25 | C | 32.9 | 12.5 | 25 | C | | | 20 | | 40 | B | |
| ***Eighth Ave @ 31st St*** | NORTH | 70 | 24 | 46 | B | 70 | 24 | 46 | B | | | | | 46 | B | |
| | EAST | 42 | 14.5 | 32 | C | 42 | 14.5 | 32 | C | | | 20 | | 44 | B | |
| | SOUTH | 70 | 14.5 | 66 | B | 70 | 14.5 | 65 | B | | | | | 65 | B | |
| | WEST | 34 | 24 | 34 | C | 34 | 24 | 34 | C | | | | | 34 | C | |
| ***Eighth Ave @ 33rd St*** | NORTH | 66.4 | 14.5 | 29 | C | 66.4 | 14.5 | 28 | C | | | 17 | | 33 | C | |
| | EAST | 31.7 | 20 | 13 | E | 31.7 | 20 | 13 | E | | | | | 13 | E | |
| | SOUTH | 70.2 | 24 | 26 | C | 70.2 | 24 | 26 | C | | | | | 26 | C | |
| | WEST | 32.5 | 24 | 11 | E | 32.5 | 24 | 11 | E | | | | | 11 | E | |
| ***Eighth Ave @ 34th St*** | NORTH | 66.8 | 20 | 27 | C | 66.8 | 20 | 26 | C | | | | 30 | 23 | D | |
| | EAST | 53.5 | 13 | 20 | D | 53.5 | 13 | 19 | D | | | 20 | 34 | 27 | C | |
| | SOUTH | 67.7 | 20 | 40 | B | 67.7 | 20 | 37 | C | | | | 30 | 32 | C | |
| | WEST | 54.3 | 13 | 13 | E | 54.3 | 13 | 13 | E | | | 20 | 34 | 18 | D | |
| ***Eighth Ave @ 37th St*** | NORTH | 70 | 11 | 34 | C | 70 | 11 | 33 | C | | | | | 33 | C | |
| | EAST | 36 | 13 | 18 | D | 36 | 13 | 18 | D | | | 20 | | 28 | C | |
| | SOUTH | 70 | 11 | 31 | C | 70 | 11 | 30 | C | | | | | 30 | C | |
| | WEST | 35 | 13 | 13 | E | 35 | 13 | 13 | E | | | 20 | | 20 | D | |
| ***Eighth Ave @ 38th St*** | NORTH | 70 | 12 | 283 | A | 70 | 12 | 212 | A | | | | | 212 | A | |
| | EAST | 36 | 15 | 35 | C | 36 | 15 | 34 | C | | | 20 | | 45 | B | |
| | SOUTH | 70 | 12 | 85 | B | 70 | 12 | 76 | B | | | | | 76 | B | |
| | WEST | 38 | 15 | 52 | B | 38 | 15 | 49 | B | | | 20 | | 66 | B | |

# Appendix S.5.5

**Pedestrian Improvement Analysis - Crosswalk Level of Service**

**2010 Future Conditions (MD)**

| Intersection | Crosswalk Location | 2010 Future without the Proposed Action | | | | 2010 Future with the Proposed Action | | | | | 2010 Future with the Proposed Action (Improvement) | | | | | |
|---|---|---|---|---|---|---|---|---|---|---|---|---|---|---|---|---|
| | | Crosswalk length (Curb-to-Curb | Crosswalk width | Pedestrian Space (s.f./ped.) | Surge Level of Service | Crosswalk length (Curb-to-Curb | Crosswalk width | Pedestrian Space (s.f./ped.) | Surge Level of Service | Impact? | Proposed Crosswalk length | Proposed Crosswalk width | Signal Timing | Pedestrian Space (s.f./ped.) | Surge Level of Service | Still Impact? |
| ***Eighth Ave @ 39th St*** | NORTH | 70 | 10 | 45 | B | 70 | 10 | 43 | B | | | | | 43 | B | |
| | EAST | 36 | 13 | 13 | E | 36 | 13 | 13 | E | | | 20 | | 20 | D | |
| | SOUTH | 70 | 10 | 12 | E | 70 | 10 | 12 | E | | | | | 12 | E | |
| | WEST | 36 | 13 | 10 | E | 36 | 13 | 10 | E | | | 20 | | 15 | D | |
| ***Eighth Ave @ 42nd St*** | NORTH | 71 | 19 | 29 | C | 71 | 19 | 26 | C | | | 20 | | 27 | C | |
| | EAST | 55 | 26 | 23 | D | 55 | 26 | 22 | D | | | | | 22 | D | |
| | SOUTH | 69 | 19 | 18 | D | 69 | 19 | 16 | D | | | 20 | | 17 | D | |
| | WEST | 60 | 27 | 34 | C | 60 | 27 | 32 | C | | | | | 32 | C | |
| ***Seventh Ave @ 31st St*** | NORTH | 75 | 11 | 23 | D | 75 | 11 | 23 | D | | | 17 | | 36 | C | |
| | EAST | 34 | 17 | 18 | D | 34 | 17 | 18 | D | | | 23 | | 24 | C | |
| | SOUTH | 60 | 11 | 36 | C | 60 | 11 | 35 | C | | | 17 | | 54 | B | |
| | WEST | 42 | 17 | 32 | C | 42 | 17 | 32 | C | | | 23 | | 44 | B | |
| ***Seventh Ave @ 33rd St*** | NORTH | 60 | 11 | 12 | E | 60 | 11 | 12 | E | | | 17 | | 19 | D | |
| | EAST | 34 | 17 | 20 | D | 34 | 17 | 20 | D | | | | | 20 | D | |
| | SOUTH | 70 | 11 | 10 | E | 70 | 11 | 10 | E | | | 17 | | 16 | D | |
| | WEST | 30 | 17 | 16 | D | 30 | 17 | 16 | D | | | 20 | | 19 | D | |
| ***Seventh Ave @ 34th St*** | NORTH | 60 | 21 | 23 | D | 60 | 21 | 22 | D | | | | | 22 | D | |
| | EAST | 54 | 18 | 31 | C | 54 | 18 | 30 | C | | | | | 30 | C | |
| | SOUTH | 60 | 21 | 35 | C | 60 | 21 | 33 | C | | | | | 33 | C | |
| | WEST | 54 | 18 | 27 | C | 54 | 18 | 27 | C | | | | | 27 | C | |
| ***Sixth Ave @ 33rd St*** | NORTH | 120 | 15 | 30 | C | 120 | 15 | 30 | C | | | | | 30 | C | |
| | EAST | 34 | 25 | 140 | A | 34 | 25 | 140 | A | | | | | 140 | A | |
| | SOUTH | 160 | 20 | 56 | B | 160 | 20 | 55 | B | | | | | 55 | B | |
| | WEST | 34 | 24 | 19 | D | 34 | 24 | 19 | D | | | | | 19 | D | |
| ***Sixth Ave @ 34th St*** | NORTH | 156 | 21 | 20 | D | 156 | 21 | 20 | D | | | | | 20 | D | |
| | EAST | 54 | 15 | 11 | E | 54 | 15 | 11 | E | | | | | 11 | E | |
| | SOUTH | 116 | 21 | 17 | D | 116 | 21 | 16 | D | | | | | 16 | D | |
| | WEST | 0 | 0 | N/A | N/A | 0 | 0 | N/A | N/A | | | | | N/A | N/A | |
| ***Broadway @ 34th St*** | NORTH | 156 | 21 | 18 | D | 156 | 21 | 18 | D | | | | | 18 | D | |
| | EAST | 0 | 0 | N/A | N/A | 0 | 0 | N/A | N/A | | | | | N/A | N/A | |
| | SOUTH | 116 | 21 | 16 | D | 116 | 21 | 16 | D | | | | | 16 | D | |
| | WEST | 54 | 28 | 14 | E | 54 | 28 | 14 | E | | | | | 14 | E | |
| ***Blvd @ 33rd St*** | NORTH | 0 | 0 | N/A | N/A | 30 | 20 | 41 | B | | | | 30 | 41 | B | |
| | EAST | 0 | 0 | N/A | N/A | 35 | 20 | 168 | A | | | | 50 | 168 | A | |
| | SOUTH | 0 | 0 | N/A | N/A | 0 | 0 | N/A | N/A | | | | | N/A | N/A | |
| | WEST | 0 | 0 | N/A | N/A | 35 | 20 | 102 | B | | | | 50 | 102 | B | |
| ***Blvd @ 34th St*** | NORTH | 0 | 0 | N/A | N/A | 30 | 20 | 16 | D | | | | | 16 | D | |
| | EAST | 0 | 0 | N/A | N/A | 59 | 20 | 134 | A | | | | | 134 | A | |
| | SOUTH | 0 | 0 | N/A | N/A | 30 | 20 | 34 | C | | | | | 34 | C | |
| | WEST | 0 | 0 | N/A | N/A | 59 | 20 | 66 | B | | | | | 66 | B | |

# Appendix S.5.5

**Pedestrian Improvement Analysis - Crosswalk Level of Service**

**2010 Future Conditions (PM)**

| Intersection | Crosswalk Location | 2010 Future without the Proposed Action | | | | 2010 Future with the Proposed Action | | | | | 2010 Future with the Proposed Action (Improvement) | | | | | |
|---|---|---|---|---|---|---|---|---|---|---|---|---|---|---|---|---|
| | | Crosswalk length (Curb-to-Curb | Crosswalk width | Pedestrian Space (s.f./ped.) | Surge Level of Service | Crosswalk length (Curb-to-Curb | Crosswalk width | Pedestrian Space (s.f./ped.) | Surge Level of Service | Impact? | Proposed Crosswalk length | Proposed Crosswalk width | Signal Timing | Pedestrian Space (s.f./ped.) | Surge Level of Service | Still Impact? |
| ***Twelfth Ave @ 30th St*** | NORTH | 0 | 0 | N/A | N/A | 0 | 0 | N/A | N/A | | | | | N/A | N/A | |
| | EAST | 33 | 19 | 2696 | A | 33 | 19 | 2157 | A | | | | 77 | 2116 | A | |
| | SOUTH | 141 | 15 | 4654 | A | 141 | 15 | 3491 | A | | | | | 3491 | A | |
| | WEST | 0 | 0 | N/A | N/A | 0 | 0 | N/A | N/A | | | | 77 | N/A | N/A | |
| ***Twelfth Ave @ 34th St*** | NORTH | 0 | 0 | N/A | N/A | 0 | 0 | N/A | N/A | | | | | N/A | N/A | |
| | EAST | 60 | 14 | 1363 | A | 60 | 14 | 839 | A | | | | | 839 | A | |
| | SOUTH | 120 | 15 | 151 | A | 120 | 15 | 143 | A | | | | | 143 | A | |
| | WEST | 0 | 0 | N/A | N/A | 0 | 0 | N/A | N/A | | | | | N/A | N/A | |
| ***Twelfth Ave @ 39th St*** | NORTH | 0 | 0 | N/A | N/A | 131 | 20 | 297 | A | | | | | 297 | A | |
| | EAST | 49 | 11 | 1199 | A | 0 | 0 | N/A | N/A | | | | 68 | N/A | N/A | |
| | SOUTH | 131 | 15 | 245 | A | 0 | 0 | N/A | N/A | | | | | N/A | N/A | |
| | WEST | 0 | 0 | N/A | N/A | 0 | 0 | N/A | N/A | | | | 68 | N/A | N/A | |
| ***Twelfth Ave @ 40th St*** | NORTH | 0 | 0 | N/A | N/A | 0 | 0 | N/A | N/A | | | | | N/A | N/A | |
| | EAST | 38 | 14 | 3043 | A | 0 | 0 | N/A | N/A | | | | | N/A | N/A | |
| | SOUTH | 139 | 15 | 5049 | A | 0 | 0 | N/A | N/A | | | | | N/A | N/A | |
| | WEST | 0 | 0 | N/A | N/A | 0 | 0 | N/A | N/A | | | | | N/A | N/A | |
| ***Twelfth Ave @ 42nd St*** | NORTH | 140 | 15 | 143 | A | 140 | 15 | 142 | A | | | | 31 | 140 | A | |
| | EAST | 70 | 15 | 501 | A | 70 | 15 | 633 | A | | | | 59 | 625 | A | |
| | SOUTH | 140 | 15 | 181 | A | 140 | 15 | 181 | A | | | | 31 | 179 | A | |
| | WEST | 0 | 0 | N/A | N/A | 0 | 0 | N/A | N/A | | | | 59 | N/A | N/A | |
| ***Eleventh Ave @ 29th St*** | NORTH | 70 | 11 | 5054 | A | 70 | 11 | 191 | A | | | | | 191 | A | |
| | EAST | 34 | 13 | 193 | A | 34 | 13 | 98 | B | | | | | 98 | B | |
| | SOUTH | 70 | 11 | 2527 | A | 70 | 11 | 2527 | A | | | | | 2527 | A | |
| | WEST | 34 | 13 | 365 | A | 34 | 13 | 199 | A | | | | | 199 | A | |
| ***Eleventh Ave @ 30th St*** | NORTH | 70 | 11 | 778 | A | 70 | 11 | 156 | A | | | 17 | | 240 | A | |
| | EAST | 34 | 13 | 274 | A | 34 | 13 | 109 | B | | | 20 | | 168 | A | |
| | SOUTH | 70 | 11 | 5054 | A | 70 | 11 | 273 | A | | | 17 | | 422 | A | |
| | WEST | 34 | 13 | 438 | A | 34 | 13 | 55 | B | | | 20 | | 84 | B | |
| ***Eleventh Ave @ 33rd St*** | NORTH | 70 | 11 | 4147 | A | 70 | 11 | 132 | A | | | 17 | | 203 | A | |
| | EAST | 34 | 13 | 380 | A | 34 | 13 | 113 | B | | | 20 | | 174 | A | |
| | SOUTH | 70 | 11 | 4147 | A | 70 | 11 | 136 | A | | | 17 | | 210 | A | |
| | WEST | 36 | 13 | 2289 | A | 0 | 0 | N/A | N/A | | | | | N/A | N/A | |
| ***Eleventh Ave @ 34th St*** | NORTH | 73 | 18 | 239 | A | 73 | 18 | 83 | B | | | 20 | 40 | 113 | B | |
| | EAST | 59 | 12 | 296 | A | 59 | 12 | 65 | B | | | 20 | 40 | 82 | B | |
| | SOUTH | 71 | 18 | 261 | A | 71 | 18 | 58 | B | | | 20 | 40 | 80 | B | |
| | WEST | 60 | 13 | 332 | A | 60 | 13 | 63 | B | | | 20 | 40 | 74 | B | |
| ***Eleventh Ave @ 35th St*** | NORTH | 87 | 10 | 3608 | A | 87 | 10 | 601 | A | | | | | 601 | A | |
| | EAST | 37 | 11 | 214 | A | 37 | 11 | 55 | B | | | | | 55 | B | |
| | SOUTH | 87 | 11 | 11907 | A | 87 | 11 | 106 | B | | | | | 106 | B | |
| | WEST | 0 | 0 | N/A | N/A | 0 | 0 | N/A | N/A | | | | | N/A | N/A | |
| ***Eleventh Ave @ 36th St*** | NORTH | 86 | 11 | 4724 | A | 86 | 11 | 859 | A | | | | | 859 | A | |
| | EAST | 35 | 10 | 148 | A | 35 | 10 | 51 | B | | | | | 51 | B | |
| | SOUTH | 87 | 11 | 3178 | A | 87 | 11 | 72 | B | | | | | 72 | B | |
| | WEST | 0 | 0 | N/A | N/A | 0 | 0 | N/A | N/A | | | | | N/A | N/A | |

# Appendix S.5.5

**Pedestrian Improvement Analysis - Crosswalk Level of Service**

**2010 Future Conditions (PM)**

| Intersection | Crosswalk Location | 2010 Future without the Proposed Action | | | | 2010 Future with the Proposed Action | | | | | 2010 Future with the Proposed Action (Improvement) | | | | | |
|---|---|---|---|---|---|---|---|---|---|---|---|---|---|---|---|---|
| | | Crosswalk length (Curb-to-Curb | Crosswalk width | Pedestrian Space (s.f./ped.) | Surge Level of Service | Crosswalk length (Curb-to-Curb | Crosswalk width | Pedestrian Space (s.f./ped.) | Surge Level of Service | Impact? | Proposed Crosswalk length | Proposed Crosswalk width | Signal Timing | Pedestrian Space (s.f./ped.) | Surge Level of Service | Still Impact? |
| ***Eleventh Ave @ 37th St*** | NORTH | 75 | 10 | 2567 | A | 75 | 10 | 642 | A | | | | 24 | 657 | A | |
| | EAST | 36 | 8 | 287 | A | 36 | 8 | 85 | B | | | | 56 | 81 | B | |
| | SOUTH | 75 | 10 | 3850 | A | 75 | 10 | 856 | A | | | | 24 | 875 | A | |
| | WEST | 0 | 0 | N/A | N/A | 0 | 0 | N/A | N/A | | | | 56 | N/A | N/A | |
| ***Eleventh Ave @ 38th St*** | NORTH | 75 | 9 | 3465 | A | 75 | 9 | 693 | A | | | | | 693 | A | |
| | EAST | 38 | 8 | 1722 | A | 38 | 8 | 164 | A | | | | | 164 | A | |
| | SOUTH | 75 | 9 | 866 | A | 75 | 9 | 408 | A | | | | | 408 | A | |
| | WEST | 0 | 0 | N/A | N/A | 0 | 0 | N/A | N/A | | | | | N/A | N/A | |
| ***Eleventh Ave @ 39th St*** | NORTH | 73 | 10 | 4200 | A | 73 | 10 | 764 | A | | | 17 | | 1298 | A | |
| | EAST | 33 | 11 | 2121 | A | 33 | 11 | 636 | A | | | 20 | | 1157 | A | |
| | SOUTH | 76 | 12 | 204 | A | 76 | 12 | 173 | A | | | 17 | | 246 | A | |
| | WEST | 36 | 13 | 2025 | A | 0 | 0 | N/A | N/A | | | | | N/A | N/A | |
| ***Eleventh Ave @ 40th St*** | NORTH | 75 | 11 | 4235 | A | 75 | 11 | 242 | A | | | | | 242 | A | |
| | EAST | 60 | 10 | 5586 | A | 60 | 10 | 1067 | A | | | | | 1067 | A | |
| | SOUTH | 75 | 11 | 471 | A | 75 | 11 | 471 | A | | | | | 471 | A | |
| | WEST | 36 | 13 | 544 | A | 0 | 0 | N/A | N/A | | | | | N/A | N/A | |
| ***Eleventh Ave @ 42nd St*** | NORTH | 70 | 15 | 71 | B | 70 | 15 | 50 | B | | | | 26 | 46 | B | |
| | EAST | 69 | 13 | 290 | A | 69 | 13 | 164 | A | | | | 29 | 152 | A | |
| | SOUTH | 71 | 15 | 82 | B | 71 | 15 | 46 | B | | | | 26 | 42 | B | |
| | WEST | 68 | 14 | 213 | A | 68 | 14 | 125 | B | | | | 29 | 115 | B | |
| ***Tenth Ave @ 29th St*** | NORTH | 70 | 11 | 221 | A | 70 | 11 | 221 | A | | | | | 221 | A | |
| | EAST | 34 | 13 | 197 | A | 34 | 13 | 187 | A | | | | | 187 | A | |
| | SOUTH | 70 | 11 | 155 | A | 70 | 11 | 155 | A | | | | | 155 | A | |
| | WEST | 34 | 13 | 102 | B | 34 | 13 | 82 | B | | | | | 82 | B | |
| ***Tenth Ave @ 30th St*** | NORTH | 71 | 14 | 199 | A | 71 | 14 | 144 | A | | | 17 | | 175 | A | |
| | EAST | 35 | 16 | 268 | A | 35 | 16 | 221 | A | | | 20 | | 276 | A | |
| | SOUTH | 74 | 13 | 321 | A | 74 | 13 | 259 | A | | | 17 | | 339 | A | |
| | WEST | 35 | 18 | 157 | A | 35 | 18 | 128 | B | | | 20 | | 143 | A | |
| ***Tenth Ave @ 31st St*** | NORTH | 70 | 13 | 802 | A | 70 | 13 | 274 | A | | | 17 | | 359 | A | |
| | EAST | 34 | 12 | 135 | A | 34 | 12 | 115 | B | | | 20 | | 192 | A | |
| | SOUTH | 70 | 11 | 2941 | A | 70 | 11 | 802 | A | | | 17 | | 1239 | A | |
| | WEST | 0 | 0 | N/A | N/A | 0 | 0 | N/A | N/A | | | | | N/A | N/A | |
| ***Tenth Ave @ 33rd St*** | NORTH | 69 | 12 | 217 | A | 69 | 12 | 58 | B | | | 17 | | 82 | B | |
| | EAST | 32 | 14 | 158 | A | 32 | 14 | 107 | B | | | 20 | | 154 | A | |
| | SOUTH | 71 | 11 | 109 | B | 71 | 11 | 40 | B | | | 17 | | 62 | B | |
| | WEST | 35 | 13 | 139 | A | 35 | 13 | 83 | B | | | 20 | | 127 | B | |
| ***Tenth Ave @ 34th St*** | NORTH | 69 | 18 | 130 | A | 69 | 18 | 47 | B | | | | 37 | 51 | B | |
| | EAST | 59 | 13 | 246 | A | 59 | 13 | 108 | B | | | | 43 | 96 | B | |
| | SOUTH | 68 | 18 | 111 | B | 68 | 18 | 39 | C | | | | 37 | 43 | B | |
| | WEST | 59 | 13 | 228 | A | 59 | 13 | 162 | A | | | | 43 | 144 | A | |
| ***Tenth Ave @ 35th St*** | NORTH | 71 | 11 | 154 | A | 71 | 11 | 70 | B | | | | 35 | 74 | B | |
| | EAST | 34 | 12 | 169 | A | 34 | 12 | 117 | B | | | | 45 | 107 | B | |
| | SOUTH | 71 | 0 | N/A | N/A | 71 | 12 | 53 | B | | | | 35 | 57 | B | |
| | WEST | 34 | 12 | 137 | A | 34 | 12 | 66 | B | | | | 45 | 60 | B | |

# Appendix S.5.5

**Pedestrian Improvement Analysis - Crosswalk Level of Service**

**2010 Future Conditions (PM)**

| Intersection | Crosswalk Location | 2010 Future without the Proposed Action | | | | 2010 Future with the Proposed Action | | | | | 2010 Future with the Proposed Action (Improvement) | | | | | |
|---|---|---|---|---|---|---|---|---|---|---|---|---|---|---|---|---|
| | | Crosswalk length (Curb-to-Curb | Crosswalk width | Pedestrian Space (s.f./ped.) | Surge Level of Service | Crosswalk length (Curb-to-Curb | Crosswalk width | Pedestrian Space (s.f./ped.) | Surge Level of Service | Impact? | Proposed Crosswalk length | Proposed Crosswalk width | Signal Timing | Pedestrian Space (s.f./ped.) | Surge Level of Service | Still Impact? |
| ***Tenth Ave @ 36th St*** | NORTH | 70 | 10 | 267 | A | 70 | 10 | 187 | A | | | | | 187 | A | |
| | EAST | 37 | 12 | 190 | A | 37 | 12 | 163 | A | | | | | 163 | A | |
| | SOUTH | 70 | 11 | 103 | B | 70 | 11 | 91 | B | | | | | 91 | B | |
| | WEST | 36 | 12 | 121 | B | 36 | 12 | 76 | B | | | | | 76 | B | |
| ***Tenth Ave @ 37th St*** | NORTH | 70 | 10 | 284 | A | 70 | 10 | 168 | A | | | | | 168 | A | |
| | EAST | 36 | 13 | 346 | A | 36 | 13 | 209 | A | | | | | 209 | A | |
| | SOUTH | 70 | 10 | 411 | A | 70 | 10 | 235 | A | | | | | 235 | A | |
| | WEST | 36 | 13 | 397 | A | 36 | 13 | 177 | A | | | | | 177 | A | |
| ***Tenth Ave @ 38th St*** | NORTH | 70 | 10 | 501 | A | 70 | 10 | 308 | A | | | | | 308 | A | |
| | EAST | 36 | 13 | 285 | A | 36 | 13 | 197 | A | | | | | 197 | A | |
| | SOUTH | 70 | 10 | 446 | A | 70 | 10 | 267 | A | | | | | 267 | A | |
| | WEST | 36 | 13 | 375 | A | 36 | 13 | 229 | A | | | | | 229 | A | |
| ***Tenth Ave @ 39th St*** | NORTH | 70 | 13 | 359 | A | 70 | 13 | 272 | A | | | | | 272 | A | |
| | EAST | 36 | 10 | 187 | A | 36 | 10 | 111 | B | | | | | 111 | B | |
| | SOUTH | 70 | 13 | 253 | A | 70 | 13 | 202 | A | | | | | 202 | A | |
| | WEST | 50 | 11 | 289 | A | 50 | 11 | 215 | A | | | | | 215 | A | |
| ***Tenth Ave @ 40th St*** | NORTH | 69.5 | 11 | 500 | A | 69.5 | 11 | 211 | A | | | | | 211 | A | |
| | EAST | 40.3 | 13 | 247 | A | 40.3 | 13 | 90 | B | | | | | 90 | B | |
| | SOUTH | 74.9 | 10 | 1526 | A | 74.9 | 10 | 704 | A | | | | | 704 | A | |
| | WEST | 32.7 | 13 | 219 | A | 32.7 | 13 | 151 | A | | | | | 151 | A | |
| ***Tenth Ave @ 41st St*** | NORTH | 68.9 | 13.8 | 233 | A | 68.9 | 13.8 | 138 | A | | | | | 138 | A | |
| | EAST | 60.8 | 13.1 | 179 | A | 60.8 | 13.1 | 67 | B | | | | | 67 | B | |
| | SOUTH | 69.5 | 13.5 | 832 | A | 69.5 | 13.5 | 429 | A | | | | | 429 | A | |
| | WEST | 30 | 11.1 | 136 | A | 30 | 11.1 | 110 | B | | | | | 110 | B | |
| ***Tenth Ave @ 42nd St*** | NORTH | 59.3 | 17.3 | 40 | B | 59.3 | 17.3 | 33 | C | | | | 38 | 38 | C | |
| | EAST | 59.3 | 14.5 | 166 | A | 59.3 | 14.5 | 111 | B | | | | 42 | 93 | B | |
| | SOUTH | 68.4 | 13.8 | 58 | B | 68.4 | 13.8 | 34 | C | | | | 38 | 39 | C | |
| | WEST | 68.2 | 15 | 283 | A | 68.2 | 15 | 238 | A | | | | 42 | 202 | A | |
| ***Dyer @ 42nd St*** | NORTH | 0 | 0 | N/A | N/A | 0 | 0 | N/A | N/A | | | | | N/A | N/A | |
| | EAST | 36 | 13.6 | 728 | A | 36 | 13.6 | 728 | A | | | | | 728 | A | |
| | SOUTH | 40 | 14 | 49 | B | 40 | 14 | 44 | B | | | | | 44 | B | |
| | WEST | 36 | 12 | 372 | A | 36 | 12 | 372 | A | | | | | 372 | A | |
| ***Ninth Ave @ 30th St*** | NORTH | 69.3 | 11.7 | 160 | A | 69.3 | 11.7 | 128 | B | | | | | 128 | B | |
| | EAST | 35.5 | 14.3 | 49 | B | 35.5 | 14.3 | 48 | B | | | | | 48 | B | |
| | SOUTH | 63 | 15.1 | 172 | A | 63 | 15.1 | 155 | A | | | | | 155 | A | |
| | WEST | 97.6 | 14.5 | 165 | A | 97.6 | 14.5 | 162 | A | | | | | 162 | A | |
| ***Ninth Ave @ 31st St*** | NORTH | 73 | 24 | 252 | A | 73 | 24 | 195 | A | | | | | 195 | A | |
| | EAST | 32 | 24 | 73 | B | 32 | 24 | 71 | B | | | | | 71 | B | |
| | SOUTH | 67.2 | 14 | 136 | A | 67.2 | 14 | 121 | B | | | | | 121 | B | |
| | WEST | 35.5 | 13 | 115 | B | 35.5 | 13 | 109 | B | | | | | 109 | B | |
| ***Ninth Ave @ 33rd St*** | NORTH | 68 | 12.5 | 117 | B | 68 | 12.5 | 50 | B | | | 17 | | 68 | B | |
| | EAST | 35.2 | 24 | 42 | B | 35.2 | 24 | 34 | C | | | | | 34 | C | |
| | SOUTH | 68.4 | 24 | 57 | B | 68.4 | 24 | 40 | B | | | | | 40 | B | |
| | WEST | 32.5 | 13.5 | 41 | B | 32.5 | 13.5 | 39 | C | | | 20 | | 57 | B | |

# Appendix S.5.5

**Pedestrian Improvement Analysis - Crosswalk Level of Service**

**2010 Future Conditions (PM)**

| Intersection | Crosswalk Location | 2010 Future without the Proposed Action | | | | 2010 Future with the Proposed Action | | | | | 2010 Future with the Proposed Action (Improvement) | | | | | |
|---|---|---|---|---|---|---|---|---|---|---|---|---|---|---|---|---|
| | | Crosswalk length (Curb-to-Curb | Crosswalk width | Pedestrian Space (s.f./ped.) | Surge Level of Service | Crosswalk length (Curb-to-Curb | Crosswalk width | Pedestrian Space (s.f./ped.) | Surge Level of Service | Impact? | Proposed Crosswalk length | Proposed Crosswalk width | Signal Timing | Pedestrian Space (s.f./ped.) | Surge Level of Service | Still Impact? |
| ***Ninth Ave @ 34th St*** | NORTH | 69.3 | 20 | 31 | C | 69.3 | 20 | 25 | C | | | | | 25 | C | |
| | EAST | 51.7 | 15 | 26 | C | 51.7 | 15 | 26 | C | | | | | 26 | C | |
| | SOUTH | 66.9 | 20 | 46 | B | 66.9 | 20 | 31 | C | | | | | 31 | C | |
| | WEST | 60.5 | 15 | 39 | C | 60.5 | 15 | 38 | C | | | | | 38 | C | |
| ***Ninth Ave @ 37th St*** | NORTH | 70 | 10 | 79 | B | 70 | 10 | 69 | B | | | | | 69 | B | |
| | EAST | 36 | 13 | 29 | C | 36 | 13 | 29 | C | | | | | 29 | C | |
| | SOUTH | 70 | 10 | 120 | B | 70 | 10 | 102 | B | | | | | 102 | B | |
| | WEST | 36 | 13 | 29 | C | 36 | 13 | 28 | C | | | | | 28 | C | |
| ***Ninth Ave @ 38th St*** | NORTH | 70 | 9 | 154 | A | 70 | 9 | 113 | B | | | | | 113 | B | |
| | EAST | 37 | 13 | 49 | B | 37 | 13 | 46 | B | | | | | 46 | B | |
| | SOUTH | 70 | 9 | 180 | A | 70 | 9 | 109 | B | | | | | 109 | B | |
| | WEST | 37 | 13 | 107 | B | 37 | 13 | 107 | B | | | | | 107 | B | |
| ***Ninth Ave @ 39th St*** | NORTH | 70 | 10 | 89 | B | 70 | 10 | 81 | B | | | | | 81 | B | |
| | EAST | 36 | 13 | 28 | C | 36 | 13 | 27 | C | | | | | 27 | C | |
| | SOUTH | 70 | 10 | 90 | B | 70 | 10 | 84 | B | | | | | 84 | B | |
| | WEST | 36 | 13 | 65 | B | 36 | 13 | 67 | B | | | | | 67 | B | |
| ***Ninth Ave @ 42nd St*** | NORTH | 69 | 14.7 | 23 | D | 69 | 14.7 | 18 | D | | | | | 18 | D | |
| | EAST | 60.8 | 13.8 | 25 | C | 60.8 | 13.8 | 25 | C | | | | | 25 | C | |
| | SOUTH | 70.5 | 10 | 22 | D | 70.5 | 10 | 12 | E | Yes | | 17 | | 21 | D | |
| | WEST | 59.2 | 12.5 | 25 | C | 59.2 | 12.5 | 18 | D | | | | | 18 | D | |
| ***Eighth Ave @ 30th St*** | NORTH | 69.2 | 12 | 150 | A | 69.2 | 12 | 123 | B | | | | | 123 | B | |
| | EAST | 31.3 | 12.6 | 20 | D | 31.3 | 12.6 | 20 | D | | | 20 | | 31 | C | |
| | SOUTH | 70.1 | 11.5 | 180 | A | 70.1 | 11.5 | 153 | A | | | | | 153 | A | |
| | WEST | 32.9 | 12.5 | 28 | C | 32.9 | 12.5 | 28 | C | | | 20 | | 45 | B | |
| ***Eighth Ave @ 31st St*** | NORTH | 70 | 24 | 69 | B | 70 | 24 | 66 | B | | | | | 66 | B | |
| | EAST | 42 | 14.5 | 34 | C | 42 | 14.5 | 34 | C | | | 20 | | 46 | B | |
| | SOUTH | 70 | 14.5 | 94 | B | 70 | 14.5 | 86 | B | | | | | 86 | B | |
| | WEST | 34 | 24 | 47 | B | 34 | 24 | 46 | B | | | | | 46 | B | |
| ***Eighth Ave @ 33rd St*** | NORTH | 66.4 | 14.5 | 19 | D | 66.4 | 14.5 | 18 | D | | | 17 | | 21 | D | |
| | EAST | 31.7 | 20 | 11 | E | 31.7 | 20 | 10 | E | Yes | | | | 10 | E | Yes |
| | SOUTH | 70.2 | 24 | 32 | C | 70.2 | 24 | 30 | C | | | | | 30 | C | |
| | WEST | 32.5 | 24 | 11 | E | 32.5 | 24 | 11 | E | | | | | 11 | E | |
| ***Eighth Ave @ 34th St*** | NORTH | 66.8 | 20 | 28 | C | 66.8 | 20 | 23 | D | | | | 29 | 20 | D | |
| | EAST | 53.5 | 13 | 17 | D | 53.5 | 13 | 15 | D | | | 20 | 34 | 21 | D | |
| | SOUTH | 67.7 | 20 | 44 | B | 67.7 | 20 | 35 | C | | | | 29 | 30 | C | |
| | WEST | 54.3 | 13 | 14 | E | 54.3 | 13 | 14 | E | | | 20 | 34 | 20 | D | |
| ***Eighth Ave @ 37th St*** | NORTH | 70 | 11 | 78 | B | 70 | 11 | 71 | B | | | | | 71 | B | |
| | EAST | 36 | 13 | 13 | E | 36 | 13 | 13 | E | | | 20 | | 20 | D | |
| | SOUTH | 70 | 11 | 60 | B | 70 | 11 | 56 | B | | | | | 56 | B | |
| | WEST | 35 | 13 | 11 | E | 35 | 13 | 11 | E | | | 20 | | 18 | D | |
| ***Eighth Ave @ 38th St*** | NORTH | 70 | 12 | 595 | A | 70 | 12 | 315 | A | | | | | 315 | A | |
| | EAST | 36 | 15 | 206 | A | 36 | 15 | 175 | A | | | 20 | | 234 | A | |
| | SOUTH | 70 | 12 | 143 | A | 70 | 12 | 115 | B | | | | | 115 | B | |
| | WEST | 38 | 15 | 431 | A | 38 | 15 | 332 | A | | | 20 | | 443 | A | |

# Appendix S.5.5

**Pedestrian Improvement Analysis - Crosswalk Level of Service**

**2010 Future Conditions (PM)**

| Intersection | Crosswalk Location | 2010 Future without the Proposed Action | | | | 2010 Future with the Proposed Action | | | | | 2010 Future with the Proposed Action (Improvement) | | | | | |
|---|---|---|---|---|---|---|---|---|---|---|---|---|---|---|---|---|
| | | Crosswalk length (Curb-to-Curb | Crosswalk width | Pedestrian Space (s.f./ped.) | Surge Level of Service | Crosswalk length (Curb-to-Curb | Crosswalk width | Pedestrian Space (s.f./ped.) | Surge Level of Service | Impact? | Proposed Crosswalk length | Proposed Crosswalk width | Signal Timing | Pedestrian Space (s.f./ped.) | Surge Level of Service | Still Impact? |
| ***Eighth Ave @ 39th St*** | NORTH | 70 | 10 | 67 | B | 70 | 10 | 61 | B | | | | | 61 | B | |
| | EAST | 36 | 13 | 9 | E | 36 | 13 | 9 | E | | | 20 | | 14 | E | |
| | SOUTH | 70 | 10 | 42 | B | 70 | 10 | 39 | C | | | | | 39 | C | |
| | WEST | 36 | 13 | 6 | E | 36 | 13 | 6 | E | | | 20 | | 9 | E | |
| ***Eighth Ave @ 42nd St*** | NORTH | 71 | 19 | 19 | D | 71 | 19 | 17 | D | | | 20 | 30 | 19 | D | |
| | EAST | 55 | 26 | 15 | D | 55 | 26 | 15 | D | | | | 38 | 16 | D | |
| | SOUTH | 69 | 19 | 9 | E | 69 | 19 | 9 | E | | | 20 | 30 | 10 | E | |
| | WEST | 60 | 27 | 14 | E | 60 | 27 | 13 | E | Yes | | | 38 | 14 | E | |
| ***Seventh Ave @ 31st St*** | NORTH | 75 | 11 | 15 | D | 75 | 11 | 14 | E | Yes | | 17 | | 22 | D | |
| | EAST | 34 | 17 | 16 | D | 34 | 17 | 16 | D | | | 23 | | 22 | D | |
| | SOUTH | 60 | 11 | 15 | D | 60 | 11 | 15 | D | | | 17 | | 23 | D | |
| | WEST | 42 | 17 | 17 | D | 42 | 17 | 17 | D | | | 23 | | 23 | D | |
| ***Seventh Ave @ 33rd St*** | NORTH | 60 | 11 | 9 | E | 60 | 11 | 8 | E | Yes | | 17 | | 13 | E | |
| | EAST | 34 | 17 | 19 | D | 34 | 17 | 19 | D | | | | | 19 | D | |
| | SOUTH | 70 | 11 | 10 | E | 70 | 11 | 10 | E | | | 17 | | 15 | D | |
| | WEST | 30 | 17 | 15 | D | 30 | 17 | 15 | D | | | 20 | | 18 | D | |
| ***Seventh Ave @ 34th St*** | NORTH | 60 | 21 | 76 | B | 60 | 21 | 62 | B | | | | | 62 | B | |
| | EAST | 54 | 18 | 72 | B | 54 | 18 | 70 | B | | | | | 70 | B | |
| | SOUTH | 60 | 21 | 59 | B | 60 | 21 | 50 | B | | | | | 50 | B | |
| | WEST | 54 | 18 | 61 | B | 54 | 18 | 61 | B | | | | | 61 | B | |
| ***Sixth Ave @ 33rd St*** | NORTH | 120 | 15 | 22 | D | 120 | 15 | 22 | D | | | | | 22 | D | |
| | EAST | 34 | 25 | 96 | B | 34 | 25 | 96 | B | | | | | 96 | B | |
| | SOUTH | 160 | 20 | 27 | C | 160 | 20 | 26 | C | | | | | 26 | C | |
| | WEST | 34 | 24 | 16 | D | 34 | 24 | 16 | D | | | | | 16 | D | |
| ***Sixth Ave @ 34th St*** | NORTH | 156 | 21 | 21 | D | 156 | 21 | 21 | D | | | | 25 | 20 | D | |
| | EAST | 54 | 15 | 14 | E | 54 | 15 | 14 | E | | | | 55 | 14 | E | |
| | SOUTH | 116 | 21 | 18 | D | 116 | 21 | 17 | D | | | | 25 | 17 | D | |
| | WEST | 0 | 0 | N/A | N/A | 0 | 0 | N/A | N/A | | | | 55 | N/A | N/A | |
| ***Broadway @ 34th St*** | NORTH | 156 | 21 | 19 | D | 156 | 21 | 18 | D | | | | | 18 | D | |
| | EAST | 0 | 0 | N/A | N/A | 0 | 0 | N/A | N/A | | | | | N/A | N/A | |
| | SOUTH | 116 | 21 | 17 | D | 116 | 21 | 17 | D | | | | | 17 | D | |
| | WEST | 54 | 28 | 15 | D | 54 | 28 | 15 | D | | | | | 15 | D | |
| ***Blvd @ 33rd St*** | NORTH | 0 | 0 | N/A | N/A | 30 | 20 | 63 | B | | | | | 63 | B | |
| | EAST | 0 | 0 | N/A | N/A | 35 | 20 | 197 | A | | | | | 197 | A | |
| | SOUTH | 0 | 0 | N/A | N/A | 0 | 0 | N/A | N/A | | | | | N/A | N/A | |
| | WEST | 0 | 0 | N/A | N/A | 35 | 20 | 111 | B | | | | | 111 | B | |
| ***Blvd @ 34th St*** | NORTH | 0 | 0 | N/A | N/A | 30 | 20 | 18 | D | | | | | 18 | D | |
| | EAST | 0 | 0 | N/A | N/A | 59 | 20 | 137 | A | | | | | 137 | A | |
| | SOUTH | 0 | 0 | N/A | N/A | 30 | 20 | 13 | E | | | | | 13 | E | |
| | WEST | 0 | 0 | N/A | N/A | 59 | 20 | 32 | C | | | | | 32 | C | |

# Appendix S.5.5

**Pedestrian Improvement Analysis - Crosswalk Level of Service**

**2010 Future Conditions (EVE)**

| Intersection | Crosswalk Location | 2010 Future without the Proposed Action | | | | 2010 Future with the Proposed Action | | | | | 2010 Future with the Proposed Action (Improvement) | | | | | |
|---|---|---|---|---|---|---|---|---|---|---|---|---|---|---|---|---|
| | | Crosswalk length (Curb-to-Curb | Crosswalk width | Pedestrian Space (s.f./ped.) | Surge Level of Service | Crosswalk length (Curb-to-Curb | Crosswalk width | Pedestrian Space (s.f./ped.) | Surge Level of Service | Impact? | Proposed Crosswalk length | Proposed Crosswalk width | Signal Timing | Pedestrian Space (s.f./ped.) | Surge Level of Service | Still Impact? |
| ***Twelfth Ave @ 30th St*** | NORTH | 0 | 0 | N/A | N/A | 0 | 0 | N/A | N/A | | | | | N/A | N/A | |
| | EAST | 33 | 19 | 3118 | A | 33 | 19 | 3118 | A | | | | | 3118 | A | |
| | SOUTH | 141 | 15 | 7302 | A | 141 | 15 | 7302 | A | | | | | 3651 | A | |
| | WEST | 0 | 0 | N/A | N/A | 0 | 0 | N/A | N/A | | | | | N/A | N/A | |
| ***Twelfth Ave @ 34th St*** | NORTH | 0 | 0 | N/A | N/A | 0 | 0 | N/A | N/A | | | | | N/A | N/A | |
| | EAST | 60 | 14 | 3301 | A | 60 | 14 | 16 | D | | | | | 16 | D | |
| | SOUTH | 120 | 15 | 6713 | A | 120 | 15 | 13 | E | Yes | | | | 6713 | A | |
| | WEST | 0 | 0 | N/A | N/A | 0 | 0 | N/A | N/A | | | | | N/A | N/A | |
| ***Eleventh Ave @ 30th St*** | NORTH | 70 | 11 | 5054 | A | 70 | 11 | 13 | E | Yes | | 39 | | 27 | C | |
| | EAST | 34 | 13 | 1642 | A | 34 | 13 | 119 | B | | | 20 | | 184 | A | |
| | SOUTH | 70 | 11 | 3370 | A | 70 | 11 | 187 | A | | | 17 | | 289 | A | |
| | WEST | 34 | 13 | 2190 | A | 34 | 13 | 30 | C | | | 20 | | 46 | B | |
| ***Eleventh Ave @ 33rd St*** | NORTH | 70 | 11 | 4147 | A | 70 | 11 | 12 | E | Yes | | 17 | | 28 | C | |
| | EAST | 34 | 13 | 1455 | A | 34 | 13 | 873 | A | | | 20 | | 1120 | A | |
| | SOUTH | 70 | 11 | 4147 | A | 70 | 11 | 3 | F | Yes | | 39 | | 12 | E | Yes |
| | WEST | 36 | 13 | 4578 | A | 0 | 0 | N/A | N/A | | | | | N/A | N/A | |
| ***Eleventh Ave @ 34th St*** | NORTH | 73 | 18 | 1695 | A | 73 | 18 | 73 | B | | | 20 | 30 | 99 | B | |
| | EAST | 59 | 12 | 1019 | A | 59 | 12 | 27 | C | | | 20 | 30 | 30 | C | |
| | SOUTH | 71 | 18 | 1473 | A | 71 | 18 | 13 | E | Yes | | 20 | 30 | 24 | C | |
| | WEST | 60 | 13 | 2421 | A | 60 | 13 | 18 | D | | | 20 | 30 | 19 | D | |
| ***Eleventh Ave @ 39th St*** | NORTH | 73 | 10 | 4200 | A | 73 | 10 | 4200 | A | | | 17 | | 3570 | A | |
| | EAST | 33 | 11 | 3182 | A | 33 | 11 | 22 | D | | | 20 | | 39 | C | |
| | SOUTH | 76 | 12 | 1301 | A | 76 | 12 | 1040 | A | | | 17 | | 1474 | A | |
| | WEST | 36 | 13 | 675 | A | 0 | 0 | N/A | N/A | | | | | N/A | N/A | |
| ***Eleventh Ave @ 42nd St*** | NORTH | 70 | 15 | 199 | A | 70 | 15 | 137 | A | | | | | 137 | A | |
| | EAST | 69 | 13 | 269 | A | 69 | 13 | 82 | B | | | | | 82 | B | |
| | SOUTH | 71 | 15 | 230 | A | 71 | 15 | 181 | A | | | | | 181 | A | |
| | WEST | 68 | 14 | 404 | A | 68 | 14 | 335 | A | | | | | 335 | A | |
| ***Tenth Ave @ 30th St*** | NORTH | 71 | 14 | 1262 | A | 71 | 14 | 10 | E | Yes | | 39 | 24 | 149 | A | |
| | EAST | 35 | 16 | 764 | A | 35 | 16 | 62 | B | | | 20 | 56 | 88 | B | |
| | SOUTH | 74 | 13 | 1090 | A | 74 | 13 | 1090 | A | | | 17 | 24 | 1325 | A | |
| | WEST | 35 | 18 | 508 | A | 35 | 18 | 429 | A | | | 20 | 56 | 541 | A | |
| ***Tenth Ave @ 31st St*** | NORTH | 70 | 13 | 2085 | A | 70 | 13 | 5 | F | Yes | | 17 | | 10 | E | Yes |
| | EAST | 34 | 12 | 660 | A | 34 | 12 | 78 | B | | | 20 | 30 | 19 | D | |
| | SOUTH | 70 | 11 | 2205 | A | 70 | 11 | 15 | D | | | 17 | | 17 | D | |
| | WEST | 0 | 0 | N/A | N/A | 0 | 0 | N/A | N/A | | | | 30 | N/A | N/A | |
| ***Tenth Ave @ 33rd St*** | NORTH | 69 | 12 | 574 | A | 69 | 12 | 14 | E | Yes | | 17 | | 31 | C | |
| | EAST | 32 | 14 | 322 | A | 32 | 14 | 52 | B | | | 20 | | 68 | B | |
| | SOUTH | 71 | 11 | 539 | A | 71 | 11 | 5 | F | Yes | | 39 | | 8 | E | Yes |
| | WEST | 35 | 13 | 862 | A | 35 | 13 | 180 | A | | | 20 | | 265 | A | |
| ***Tenth Ave @ 34th St*** | NORTH | 69 | 18 | 571 | A | 69 | 18 | 71 | B | | | | | 106 | B | |
| | EAST | 59 | 13 | 397 | A | 59 | 13 | 85 | B | | | | 30 | 71 | B | |
| | SOUTH | 68 | 18 | 239 | A | 68 | 18 | 26 | C | | | | | 43 | B | |
| | WEST | 59 | 13 | 1025 | A | 59 | 13 | 103 | B | | | | 30 | 86 | B | |

# Appendix S.5.5

**Pedestrian Improvement Analysis - Crosswalk Level of Service**

**2010 Future Conditions (EVE)**

| Intersection | Crosswalk Location | 2010 Future without the Proposed Action | | | | 2010 Future with the Proposed Action | | | | | 2010 Future with the Proposed Action (Improvement) | | | | | |
|---|---|---|---|---|---|---|---|---|---|---|---|---|---|---|---|---|
| | | Crosswalk length (Curb-to-Curb | Crosswalk width | Pedestrian Space (s.f./ped.) | Surge Level of Service | Crosswalk length (Curb-to-Curb | Crosswalk width | Pedestrian Space (s.f./ped.) | Surge Level of Service | Impact? | Proposed Crosswalk length | Proposed Crosswalk width | Signal Timing | Pedestrian Space (s.f./ped.) | Surge Level of Service | Still Impact? |
| ***Ninth Ave @ 30th St*** | NORTH | 69 | 12 | 480 | A | 69 | 12 | 24 | C | | | | | 214 | A | |
| | EAST | 36 | 14 | 149 | A | 36 | 14 | 149 | A | | | | | 149 | A | |
| | SOUTH | 63 | 15 | 603 | A | 63 | 15 | 142 | A | | | | | 142 | A | |
| | WEST | 98 | 15 | 621 | A | 98 | 15 | 601 | A | | | | | 601 | A | |
| ***Ninth Ave @ 31st St*** | NORTH | 73 | 24 | 2843 | A | 73 | 24 | 11 | E | Yes | | | | 25 | C | |
| | EAST | 32 | 24 | 270 | A | 32 | 24 | 27 | C | | | | | 265 | A | |
| | SOUTH | 67 | 14 | 776 | A | 67 | 14 | 15 | D | | | | | 272 | A | |
| | WEST | 36 | 13 | 263 | A | 36 | 13 | 20 | D | | | | | 23 | D | |
| ***Ninth Ave @ 33rd St*** | NORTH | 68 | 13 | 408 | A | 68 | 13 | 17 | D | | | 17 | | 27 | C | |
| | EAST | 35 | 24 | 208 | A | 35 | 24 | 85 | B | | | | | 73 | B | |
| | SOUTH | 68 | 24 | 315 | A | 68 | 24 | 8 | E | Yes | | 46 | | 7 | E | Yes |
| | WEST | 33 | 14 | 393 | A | 33 | 14 | 59 | B | | | 20 | | 64 | B | |
| ***Ninth Ave @ 34th St*** | NORTH | 69 | 20 | 172 | A | 69 | 20 | 42 | B | | | | 30 | 62 | B | |
| | EAST | 52 | 15 | 116 | B | 52 | 15 | 43 | B | | | | 30 | 39 | C | |
| | SOUTH | 67 | 20 | 173 | A | 67 | 20 | 26 | C | | | | 30 | 60 | B | |
| | WEST | 61 | 15 | 273 | A | 61 | 15 | 66 | B | | | | 30 | 65 | B | |
| ***Eighth Ave @ 30th St*** | NORTH | 69 | 12 | 408 | A | 69 | 12 | 71 | B | | | | 39 | 234 | A | |
| | EAST | 31 | 13 | 63 | B | 31 | 13 | 63 | B | | | 20 | 41 | 99 | B | |
| | SOUTH | 70 | 12 | 332 | A | 70 | 12 | 332 | A | | | | 39 | 336 | A | |
| | WEST | 33 | 13 | 60 | B | 33 | 13 | 60 | B | | | 20 | 41 | 95 | B | |
| ***Eighth Ave @ 31st St*** | NORTH | 70 | 24 | 155 | A | 70 | 24 | 18 | D | | | | | 43 | B | |
| | EAST | 42 | 15 | 45 | B | 42 | 15 | 19 | D | | | 20 | | 63 | B | |
| | SOUTH | 70 | 15 | 230 | A | 70 | 15 | 35 | C | | | | | 171 | A | |
| | WEST | 34 | 24 | 100 | B | 34 | 24 | 36 | C | | | | | 99 | B | |
| ***Eighth Ave @ 33rd St*** | NORTH | 66 | 15 | 70 | B | 66 | 15 | 28 | C | | | 17 | 30 | 30 | C | |
| | EAST | 32 | 20 | 22 | D | 32 | 20 | 20 | D | | | | 30 | 18 | D | |
| | SOUTH | 70 | 24 | 71 | B | 70 | 24 | 15 | D | | | 46 | 30 | 18 | D | |
| | WEST | 33 | 24 | 18 | D | 33 | 24 | 18 | D | | | | 30 | 15 | D | |
| ***Eighth Ave @ 34th St*** | NORTH | 67 | 20 | 110 | B | 67 | 20 | 58 | B | | | | 30 | 65 | B | |
| | EAST | 54 | 13 | 23 | D | 54 | 13 | 21 | D | | | 20 | 30 | 29 | C | |
| | SOUTH | 68 | 20 | 11 | E | 68 | 20 | 9 | E | Yes | | | 30 | 9 | E | Yes |
| | WEST | 54 | 13 | 62 | B | 54 | 13 | 53 | B | | | 20 | 30 | 67 | B | |
| ***Sixth Ave @ 34th St*** | NORTH | 156 | 21 | 81 | B | 156 | 21 | 81 | B | | | | | 81 | B | |
| | EAST | 54 | 15 | 38 | C | 54 | 15 | 38 | C | | | | | 38 | C | |
| | SOUTH | 116 | 21 | 48 | B | 116 | 21 | 48 | B | | | | | 48 | B | |
| | WEST | 0 | 0 | N/A | N/A | 0 | 0 | N/A | N/A | | | | | N/A | N/A | |
| ***Broadway @ 34th St*** | NORTH | 156 | 21 | 57 | B | 156 | 21 | 57 | B | | | | | 57 | B | |
| | EAST | 0 | 0 | N/A | N/A | 0 | 0 | N/A | N/A | | | | | N/A | N/A | |
| | SOUTH | 116 | 21 | 48 | B | 116 | 21 | 48 | B | | | | | 48 | B | |
| | WEST | 54 | 28 | 64 | B | 54 | 28 | 64 | B | | | | | 64 | B | |
| ***Blvd @ 33rd St*** | NORTH | 0 | 0 | N/A | N/A | 30 | 20 | 17 | D | | | | 45 | 25 | C | |
| | EAST | 0 | 0 | N/A | N/A | 35 | 20 | 35 | C | | | | 45 | 80 | B | |
| | SOUTH | 0 | 0 | N/A | N/A | 0 | 0 | N/A | N/A | | | | | N/A | N/A | |
| | WEST | 0 | 0 | N/A | N/A | 35 | 20 | 47 | B | | | | 45 | 24 | C | |
| ***Blvd @ 34th St*** | NORTH | 0 | 0 | N/A | N/A | 30 | 20 | 34 | C | | | | | 42 | B | |
| | EAST | 0 | 0 | N/A | N/A | 59 | 20 | 531 | A | | | | | 843 | A | |
| | SOUTH | 0 | 0 | N/A | N/A | 30 | 20 | 17 | D | | | | | 26 | C | |
| | WEST | 0 | 0 | N/A | N/A | 59 | 20 | 478 | A | | | | | 651 | A | |

# Appendix S.5.5

**Pedestrian Improvement Analysis - Crosswalk Level of Service**

**2010 Future Conditions (SUN)**

| Intersection | Crosswalk Location | 2010 Future without the Proposed Action | | | | 2010 Future with the Proposed Action | | | | | 2010 Future with the Proposed Action (Improvement) | | | | | |
|---|---|---|---|---|---|---|---|---|---|---|---|---|---|---|---|---|
| | | Crosswalk length (Curb-to-Curb | Crosswalk width | Pedestrian Space (s.f./ped.) | Surge Level of Service | Crosswalk length (Curb-to-Curb | Crosswalk width | Pedestrian Space (s.f./ped.) | Surge Level of Service | Impact? | Proposed Crosswalk length | Proposed Crosswalk width | Signal Timing | Pedestrian Space (s.f./ped.) | Surge Level of Service | Still Impact? |
| ***Twelfth Ave @ 30th St*** | NORTH | 0 | 0 | N/A | N/A | 0 | 0 | N/A | N/A | | | | | N/A | N/A | |
| | EAST | 33 | 19 | 1559 | A | 33 | 19 | 1559 | A | | | | | 1559 | A | |
| | SOUTH | 141 | 15 | 7302 | A | 141 | 15 | 7302 | A | | | | | 7302 | A | |
| | WEST | 0 | 0 | N/A | N/A | 0 | 0 | N/A | N/A | | | | | N/A | N/A | |
| ***Twelfth Ave @ 34th St*** | NORTH | 0 | 0 | N/A | N/A | 0 | 0 | N/A | N/A | | | | | N/A | N/A | |
| | EAST | 60 | 14 | 1415 | A | 60 | 14 | 16 | D | | | | | 16 | D | |
| | SOUTH | 120 | 15 | 110 | B | 120 | 15 | 11 | E | Yes | | | | 110 | B | |
| | WEST | 0 | 0 | N/A | N/A | 0 | 0 | N/A | N/A | | | | | N/A | N/A | |
| ***Eleventh Ave @ 30th St*** | NORTH | 70 | 11 | 481 | A | 70 | 11 | 8 | E | Yes | | 39 | | 20 | D | |
| | EAST | 34 | 13 | 313 | A | 34 | 13 | 212 | A | | | 20 | | 326 | A | |
| | SOUTH | 70 | 11 | 3370 | A | 70 | 11 | 41 | B | | | 17 | | 20 | D | |
| | WEST | 34 | 13 | 386 | A | 34 | 13 | 11 | E | Yes | | 20 | | 404 | A | |
| ***Eleventh Ave @ 33rd St*** | NORTH | 70 | 11 | 2765 | A | 70 | 11 | 6 | E | Yes | | 17 | | 11 | E | Yes |
| | EAST | 34 | 13 | 312 | A | 34 | 13 | 143 | A | | | 20 | | 220 | A | |
| | SOUTH | 70 | 11 | 4147 | A | 70 | 11 | 3 | F | Yes | | 39 | | 13 | E | Yes |
| | WEST | 36 | 13 | 3052 | A | 0 | 0 | N/A | N/A | | | | | N/A | N/A | |
| ***Eleventh Ave @ 34th St*** | NORTH | 73 | 18 | 146 | A | 73 | 18 | 28 | C | | | 20 | 30 | 35 | C | |
| | EAST | 59 | 12 | 201 | A | 59 | 12 | 12 | E | Yes | | 20 | 30 | 13 | E | Yes |
| | SOUTH | 71 | 18 | 182 | A | 71 | 18 | 13 | E | Yes | | 20 | 30 | 21 | D | |
| | WEST | 60 | 13 | 223 | A | 60 | 13 | 10 | E | Yes | | 20 | 30 | 10 | E | Yes |
| ***Eleventh Ave @ 39th St*** | NORTH | 73 | 10 | 840 | A | 73 | 10 | 112 | B | | | 17 | 50 | 251 | A | |
| | EAST | 33 | 11 | 2121 | A | 33 | 11 | 12 | E | Yes | | 20 | 30 | 16 | D | |
| | SOUTH | 76 | 12 | 104 | B | 76 | 12 | 57 | B | | | 17 | 50 | 107 | B | |
| | WEST | 36 | 13 | 426 | A | 0 | 0 | N/A | N/A | | | | 30 | N/A | N/A | |
| ***Eleventh Ave @ 42nd St*** | NORTH | 70 | 15 | 64 | B | 70 | 15 | 40 | B | | | | 36 | 42 | B | |
| | EAST | 69 | 13 | 298 | A | 69 | 13 | 64 | B | | | | 22 | 54 | B | |
| | SOUTH | 71 | 15 | 63 | B | 71 | 15 | 45 | B | | | | 36 | 46 | B | |
| | WEST | 68 | 14 | 260 | A | 68 | 14 | 78 | B | | | | 22 | 66 | B | |
| ***Tenth Ave @ 30th St*** | NORTH | 71 | 14 | 140 | A | 71 | 14 | 7 | E | Yes | | 39 | 28 | 41 | B | |
| | EAST | 35 | 16 | 203 | A | 35 | 16 | 79 | B | | | 20 | 52 | 227 | A | |
| | SOUTH | 74 | 13 | 330 | A | 74 | 13 | 96 | B | | | 17 | 28 | 122 | B | |
| | WEST | 35 | 18 | 128 | B | 35 | 18 | 106 | B | | | 20 | 52 | 123 | B | |
| ***Tenth Ave @ 31st St*** | NORTH | 70 | 13 | 521 | A | 70 | 13 | 5 | F | Yes | | 17 | | 10 | E | Yes |
| | EAST | 34 | 12 | 123 | B | 34 | 12 | 53 | B | | | 20 | 30 | 17 | D | |
| | SOUTH | 70 | 11 | 4411 | A | 70 | 11 | 14 | E | Yes | | 17 | | 16 | D | |
| | WEST | 0 | 0 | N/A | N/A | 0 | 0 | N/A | N/A | | | | 30 | N/A | N/A | |
| ***Tenth Ave @ 33rd St*** | NORTH | 69 | 12 | 168 | A | 69 | 12 | 10 | E | Yes | | 17 | | 19 | D | |
| | EAST | 32 | 14 | 189 | A | 32 | 14 | 103 | B | | | 20 | | 129 | B | |
| | SOUTH | 71 | 11 | 103 | B | 71 | 11 | 5 | F | Yes | | 39 | | 8 | E | Yes |
| | WEST | 35 | 13 | 127 | B | 35 | 13 | 71 | B | | | 20 | | 108 | B | |
| ***Tenth Ave @ 34th St*** | NORTH | 69 | 18 | 153 | A | 69 | 18 | 53 | B | | | | 43 | 79 | B | |
| | EAST | 59 | 13 | 308 | A | 59 | 13 | 82 | B | | | | 37 | 73 | B | |
| | SOUTH | 68 | 18 | 188 | A | 68 | 18 | 30 | C | | | | 43 | 62 | B | |
| | WEST | 59 | 13 | 342 | A | 59 | 13 | 60 | B | | | | 37 | 52 | B | |

# Appendix S.5.5

**Pedestrian Improvement Analysis - Crosswalk Level of Service**

**2010 Future Conditions (SUN)**

| Intersection | Crosswalk Location | 2010 Future without the Proposed Action | | | | 2010 Future with the Proposed Action | | | | | 2010 Future with the Proposed Action (Improvement) | | | | | |
|---|---|---|---|---|---|---|---|---|---|---|---|---|---|---|---|---|
| | | Crosswalk length (Curb-to-Curb | Crosswalk width | Pedestrian Space (s.f./ped.) | Surge Level of Service | Crosswalk length (Curb-to-Curb | Crosswalk width | Pedestrian Space (s.f./ped.) | Surge Level of Service | Impact? | Proposed Crosswalk length | Proposed Crosswalk width | Signal Timing | Pedestrian Space (s.f./ped.) | Surge Level of Service | Still Impact? |
| ***Ninth Ave @ 30th St*** | NORTH | 69.3 | 11.7 | 99 | B | 69.3 | 11.7 | 11 | E | Yes | | | 30 | 14 | E | Yes |
| | EAST | 35.5 | 14.3 | 50 | B | 35.5 | 14.3 | 27 | C | | | | 30 | 36 | C | |
| | SOUTH | 63 | 15.1 | 103 | B | 63 | 15.1 | 56 | B | | | | 30 | 51 | B | |
| | WEST | 97.6 | 14.5 | 127 | B | 97.6 | 14.5 | 104 | B | | | | 30 | 86 | B | |
| ***Ninth Ave @ 31st St*** | NORTH | 73 | 24 | 133 | A | 73 | 24 | 9 | E | Yes | | | | 19 | D | |
| | EAST | 32 | 24 | 51 | B | 32 | 24 | 18 | D | | | | | 46 | B | |
| | SOUTH | 67.2 | 14 | 151 | A | 67.2 | 14 | 13 | E | Yes | | | | 80 | B | |
| | WEST | 35.5 | 13 | 138 | A | 35.5 | 13 | 17 | D | | | | | 19 | D | |
| ***Ninth Ave @ 33rd St*** | NORTH | 68 | 12.5 | 121 | B | 68 | 12.5 | 14 | E | Yes | | 17 | | 21 | D | |
| | EAST | 35.2 | 24 | 52 | B | 35.2 | 24 | 43 | B | | | | | 40 | B | |
| | SOUTH | 68.4 | 24 | 100 | B | 68.4 | 24 | 7 | E | Yes | | 46 | | 7 | E | Yes |
| | WEST | 32.5 | 13.5 | 95 | B | 32.5 | 13.5 | 53 | B | | | 20 | | 53 | B | |
| ***Ninth Ave @ 34th St*** | NORTH | 69.3 | 20 | 85 | B | 69.3 | 20 | 46 | B | | | | 30 | 65 | B | |
| | EAST | 51.7 | 15 | 40 | B | 51.7 | 15 | 30 | C | | | | 30 | 27 | C | |
| | SOUTH | 66.9 | 20 | 84 | B | 66.9 | 20 | 23 | D | | | | 30 | 43 | B | |
| | WEST | 60.5 | 15 | 220 | A | 60.5 | 15 | 84 | B | | | | 30 | 83 | B | |
| ***Eighth Ave @ 30th St*** | NORTH | 69.2 | 12 | 177 | A | 69.2 | 12 | 28 | C | | | | | 31 | C | |
| | EAST | 31.3 | 12.6 | 41 | B | 31.3 | 12.6 | 22 | D | | | 20 | | 45 | B | |
| | SOUTH | 70.1 | 11.5 | 257 | A | 70.1 | 11.5 | 85 | B | | | | | 54 | B | |
| | WEST | 32.9 | 12.5 | 42 | B | 32.9 | 12.5 | 25 | C | | | 20 | | 55 | B | |
| ***Eighth Ave @ 31st St*** | NORTH | 70 | 24 | 111 | B | 70 | 24 | 16 | D | | | | | 32 | C | |
| | EAST | 42 | 14.5 | 43 | B | 42 | 14.5 | 15 | D | | | 20 | | 39 | C | |
| | SOUTH | 70 | 14.5 | 148 | A | 70 | 14.5 | 25 | C | | | | | 57 | B | |
| | WEST | 34 | 24 | 65 | B | 34 | 24 | 28 | C | | | | | 56 | B | |
| ***Eighth Ave @ 33rd St*** | NORTH | 66.4 | 14.5 | 49 | B | 66.4 | 14.5 | 24 | C | | | 17 | 30 | 26 | C | |
| | EAST | 31.7 | 20 | 23 | D | 31.7 | 20 | 16 | D | | | | 30 | 13 | E | Yes |
| | SOUTH | 70.2 | 24 | 52 | B | 70.2 | 24 | 12 | E | Yes | | 46 | 30 | 17 | D | |
| | WEST | 32.5 | 24 | 24 | C | 32.5 | 24 | 22 | D | | | | 30 | 17 | D | |
| ***Eighth Ave @ 34th St*** | NORTH | 66.8 | 20 | 48 | B | 66.8 | 20 | 36 | C | | | | 30 | 35 | C | |
| | EAST | 53.5 | 13 | 33 | C | 53.5 | 13 | 22 | D | | | 20 | 30 | 30 | C | |
| | SOUTH | 67.7 | 20 | 36 | C | 67.7 | 20 | 17 | D | | | | 30 | 20 | D | |
| | WEST | 54.3 | 13 | 26 | C | 54.3 | 13 | 22 | D | | | 20 | 30 | 29 | C | |
| ***Sixth Ave @ 34th St*** | NORTH | 156 | 21 | 41 | B | 156 | 21 | 40 | B | | | | 28 | 40 | B | |
| | EAST | 54 | 15 | 20 | D | 54 | 15 | 20 | D | | | | 52 | 20 | D | |
| | SOUTH | 116 | 21 | 27 | C | 116 | 21 | 27 | C | | | | 28 | 27 | C | |
| | WEST | 0 | 0 | N/A | N/A | 0 | 0 | N/A | N/A | | | | 52 | N/A | N/A | |
| ***Broadway @ 34th St*** | NORTH | 156 | 21 | 40 | B | 156 | 21 | 39 | C | | | | 28 | 40 | B | |
| | EAST | 0 | 0 | N/A | N/A | 0 | 0 | N/A | N/A | | | | 52 | N/A | N/A | |
| | SOUTH | 116 | 21 | 41 | B | 116 | 21 | 40 | B | | | | 28 | 41 | B | |
| | WEST | 54 | 28 | 51 | B | 54 | 28 | 48 | B | | | | 52 | 48 | B | |
| ***Blvd @ 33rd St*** | NORTH | 0 | 0 | N/A | N/A | 30 | 20 | 12 | E | | | | 45 | 14 | E | |
| | EAST | 0 | 0 | N/A | N/A | 35 | 20 | 34 | C | | | | 45 | 66 | B | |
| | SOUTH | 0 | 0 | N/A | N/A | 0 | 0 | N/A | N/A | | | | | N/A | N/A | |
| | WEST | 0 | 0 | N/A | N/A | 35 | 20 | 41 | B | | | | 45 | 23 | D | |
| ***Blvd @ 34th St*** | NORTH | 0 | 0 | N/A | N/A | 30 | 20 | 21 | D | | | | | 23 | D | |
| | EAST | 0 | 0 | N/A | N/A | 59 | 20 | 357 | A | | | | | 430 | A | |
| | SOUTH | 0 | 0 | N/A | N/A | 30 | 20 | 16 | D | | | | | 24 | C | |
| | WEST | 0 | 0 | N/A | N/A | 59 | 20 | 259 | A | | | | | 287 | A | |

# Appendix S.5.5

**Pedestrian Improvement Analysis - Crosswalk Level of Service**

**2025 Future Conditions (AM)**

| Intersection | Crosswalk Location | 2025 Future without the Proposed Action | | | | 2025 Future with the Proposed Action | | | | | 2025 Future with the Proposed Action (Improvement) | | | | | |
|---|---|---|---|---|---|---|---|---|---|---|---|---|---|---|---|---|
| | | Crosswalk length (Curb-to-Curb | Crosswalk width | Pedestrian Space (s.f./ped.) | Surge Level of Service | Crosswalk length (Curb-to-Curb | Crosswalk width | Pedestrian Space (s.f./ped.) | Surge Level of Service | Impact? | Proposed Crosswalk length | Proposed Crosswalk width | Signal Timing | Pedestrian Space (s.f./ped.) | Surge Level of Service | Still Impact? |
| ***Twelfth Ave @ 30th St*** | NORTH | 0 | 0 | N/A | N/A | 0 | 0 | N/A | N/A | | | | | N/A | N/A | |
| | EAST | 33 | 19 | 4319 | A | 33 | 19 | 1440 | A | | | | 94 | 2127 | A | |
| | SOUTH | 141 | 15 | 1484 | A | 141 | 15 | 1187 | A | | | | | 1187 | A | |
| | WEST | 0 | 0 | N/A | N/A | 0 | 0 | N/A | N/A | | | | 94 | N/A | N/A | |
| ***Twelfth Ave @ 34th St*** | NORTH | 0 | 0 | N/A | N/A | 0 | 0 | N/A | N/A | | | | 35 | N/A | N/A | |
| | EAST | 60 | 14 | 4378 | A | 60 | 14 | 1459 | A | | | 20 | 69 | 5548 | A | |
| | SOUTH | 120 | 15 | 215 | A | 120 | 15 | 207 | A | | | 17 | 35 | 244 | A | |
| | WEST | 0 | 0 | N/A | N/A | 0 | 0 | N/A | N/A | | | | 69 | N/A | N/A | |
| ***Twelfth Ave @ 39th St*** | NORTH | 0 | 0 | N/A | N/A | 131 | 20 | 138 | A | | | | 28 | 137 | A | |
| | EAST | 49 | 11 | 2556 | A | 0 | 0 | N/A | N/A | | | | 98 | N/A | N/A | |
| | SOUTH | 131 | 15 | 270 | A | 0 | 0 | N/A | N/A | | | | 28 | N/A | N/A | |
| | WEST | 0 | 0 | N/A | N/A | 0 | 0 | N/A | N/A | | | | 98 | N/A | N/A | |
| ***Twelfth Ave @ 40th St*** | NORTH | 0 | 0 | N/A | N/A | 0 | 0 | N/A | N/A | | | | | N/A | N/A | |
| | EAST | 38 | 14 | 1917 | A | 0 | 0 | N/A | N/A | | | | | N/A | N/A | |
| | SOUTH | 139 | 15 | 6521 | A | 0 | 0 | N/A | N/A | | | | | N/A | N/A | |
| | WEST | 0 | 0 | N/A | N/A | 0 | 0 | N/A | N/A | | | | | N/A | N/A | |
| ***Twelfth Ave @ 42nd St*** | NORTH | 140 | 15 | 232 | A | 140 | 15 | 227 | A | | | 17 | | 258 | A | |
| | EAST | 70 | 15 | 863 | A | 70 | 15 | 527 | A | | | 20 | 66 | 683 | A | |
| | SOUTH | 140 | 15 | 205 | A | 140 | 15 | 205 | A | | | 17 | | 232 | A | |
| | WEST | 0 | 0 | N/A | N/A | 0 | 0 | N/A | N/A | | | | | N/A | N/A | |
| ***Eleventh Ave @ 29th St*** | NORTH | 70 | 11 | 3370 | A | 70 | 11 | 674 | A | | | 17 | | 1041 | A | |
| | EAST | 34 | 13 | 346 | A | 34 | 13 | 47 | B | | | 20 | | 72 | B | |
| | SOUTH | 70 | 11 | 5054 | A | 70 | 11 | 5054 | A | | | 17 | | 7811 | A | |
| | WEST | 34 | 13 | 1095 | A | 34 | 13 | 71 | B | | | 20 | | 109 | B | |
| ***Eleventh Ave @ 30th St*** | NORTH | 70 | 11 | 1444 | A | 70 | 11 | 166 | A | | | 17 | | 256 | A | |
| | EAST | 34 | 13 | 938 | A | 34 | 13 | 34 | C | | | 20 | | 53 | B | |
| | SOUTH | 70 | 11 | 5054 | A | 70 | 11 | 235 | A | | | 17 | | 363 | A | |
| | WEST | 34 | 13 | 938 | A | 34 | 13 | 64 | B | | | 20 | | 98 | B | |
| ***Eleventh Ave @ 33rd St*** | NORTH | 70 | 11 | 4147 | A | 70 | 11 | 173 | A | | | 17 | | 267 | A | |
| | EAST | 34 | 13 | 546 | A | 34 | 13 | 43 | B | | | 20 | | 66 | B | |
| | SOUTH | 70 | 11 | 2073 | A | 70 | 11 | 132 | A | | | 17 | | 203 | A | |
| | WEST | 36 | 13 | 832 | A | 0 | 0 | N/A | N/A | | | | | N/A | N/A | |
| ***Eleventh Ave @ 34th St*** | NORTH | 73 | 18 | 484 | A | 73 | 18 | 63 | B | | | 20 | 28 | 75 | B | |
| | EAST | 59 | 12 | 315 | A | 59 | 12 | 50 | B | | | 20 | 39 | 60 | B | |
| | SOUTH | 71 | 18 | 442 | A | 71 | 18 | 109 | B | | | 20 | 28 | 130 | A | |
| | WEST | 60 | 13 | 692 | A | 60 | 13 | 73 | B | | | 20 | 39 | 81 | B | |
| ***Eleventh Ave @ 35th St*** | NORTH | 87 | 10 | 3608 | A | 87 | 10 | 328 | A | | | 17 | | 558 | A | |
| | EAST | 37 | 11 | 399 | A | 37 | 11 | 10 | E | Yes | | 20 | | 19 | D | |
| | SOUTH | 87 | 11 | 5954 | A | 87 | 11 | 189 | A | | | 17 | | 292 | A | |
| | WEST | 0 | 0 | N/A | N/A | 0 | 0 | N/A | N/A | | | | | N/A | N/A | |
| ***Eleventh Ave @ 36th St*** | NORTH | 86 | 11 | 3149 | A | 86 | 11 | 102 | B | | | 17 | | 157 | A | |
| | EAST | 35 | 10 | 333 | A | 35 | 10 | 4 | F | Yes | | 20 | | 9 | E | Yes |
| | SOUTH | 87 | 11 | 1907 | A | 87 | 11 | 92 | B | | | 17 | | 142 | A | |
| | WEST | 0 | 0 | N/A | N/A | 0 | 0 | N/A | N/A | | | | | N/A | N/A | |

# Appendix S.5.5

## Pedestrian Improvement Analysis - Crosswalk Level of Service

### 2025 Future Conditions (AM)

| Intersection | Crosswalk Location | 2025 Future without the Proposed Action | | | | 2025 Future with the Proposed Action | | | | | 2025 Future with the Proposed Action (Improvement) | | | | | |
|---|---|---|---|---|---|---|---|---|---|---|---|---|---|---|---|---|
| | | Crosswalk length (Curb-to-Curb | Crosswalk width | Pedestrian Space (s.f./ped.) | Surge Level of Service | Crosswalk length (Curb-to-Curb | Crosswalk width | Pedestrian Space (s.f./ped.) | Surge Level of Service | Impact? | Proposed Crosswalk length | Proposed Crosswalk width | Signal Timing | Pedestrian Space (s.f./ped.) | Surge Level of Service | Still Impact? |
| ***Eleventh Ave @ 37th St*** | NORTH | 75 | 10 | 1925 | A | 75 | 10 | 175 | A | | | 17 | 42 | 385 | A | |
| | EAST | 36 | 8 | 548 | A | 36 | 8 | 10 | E | Yes | | 20 | 38 | 17 | D | |
| | SOUTH | 75 | 10 | 3850 | A | 75 | 10 | 220 | A | | | 17 | 42 | 485 | A | |
| | WEST | 0 | 0 | N/A | N/A | 0 | 0 | N/A | N/A | | | | 38 | N/A | N/A | |
| ***Eleventh Ave @ 38th St*** | NORTH | 75 | 9 | 3465 | A | 75 | 9 | 462 | A | | | 17 | 17 | 826 | A | |
| | EAST | 38 | 8 | 1148 | A | 38 | 8 | 22 | D | | | 20 | 17 | 51 | B | |
| | SOUTH | 75 | 9 | 3465 | A | 75 | 9 | 277 | A | | | 17 | 17 | 495 | A | |
| | WEST | 0 | 0 | N/A | N/A | 0 | 0 | N/A | N/A | | | | 17 | N/A | N/A | |
| ***Eleventh Ave @ 39th St*** | NORTH | 73 | 10 | 2800 | A | 73 | 10 | 240 | A | | | 17 | 40 | 461 | A | |
| | EAST | 33 | 11 | 1061 | A | 33 | 11 | 32 | C | | | 20 | 40 | 49 | B | |
| | SOUTH | 76 | 12 | 400 | A | 76 | 12 | 120 | B | | | 17 | 40 | 191 | A | |
| | WEST | 36 | 13 | 96 | B | 0 | 0 | N/A | N/A | | | | 40 | N/A | N/A | |
| ***Eleventh Ave @ 40th St*** | NORTH | 75 | 11 | 2823 | A | 75 | 11 | 109 | B | | | | | 109 | B | |
| | EAST | 60 | 10 | 3724 | A | 60 | 10 | 38 | C | | | | | 38 | C | |
| | SOUTH | 75 | 11 | 4235 | A | 75 | 11 | 2823 | A | | | | | 2823 | A | |
| | WEST | 36 | 13 | 544 | A | 0 | 0 | N/A | N/A | | | | | N/A | N/A | |
| ***Eleventh Ave @ 42nd St*** | NORTH | 70 | 15 | 90 | B | 70 | 15 | 97 | B | | | 17 | 39 | 119 | B | |
| | EAST | 69 | 13 | 183 | A | 69 | 13 | 39 | C | | | 20 | 29 | 55 | B | |
| | SOUTH | 71 | 15 | 116 | B | 71 | 15 | 41 | B | | | 17 | 39 | 50 | B | |
| | WEST | 68 | 14 | 117 | B | 68 | 14 | 59 | B | | | 20 | 29 | 79 | B | |
| ***Tenth Ave @ 29th St*** | NORTH | 70 | 11 | 252 | A | 70 | 11 | 150 | A | | | 17 | | 231 | A | |
| | EAST | 34 | 13 | 213 | A | 34 | 13 | 62 | B | | | 20 | | 95 | B | |
| | SOUTH | 70 | 11 | 166 | A | 70 | 11 | 119 | B | | | 17 | | 184 | A | |
| | WEST | 34 | 13 | 111 | B | 34 | 13 | 23 | D | | | 20 | | 36 | C | |
| ***Tenth Ave @ 30th St*** | NORTH | 71 | 14 | 392 | A | 71 | 14 | 49 | B | | | 17 | | 59 | B | |
| | EAST | 35 | 16 | 236 | A | 35 | 16 | 62 | B | | | 20 | | 77 | B | |
| | SOUTH | 74 | 13 | 419 | A | 74 | 13 | 131 | A | | | 17 | | 172 | A | |
| | WEST | 35 | 18 | 189 | A | 35 | 18 | 26 | C | | | 20 | | 28 | C | |
| ***Tenth Ave @ 31st St*** | NORTH | 70 | 13 | 1303 | A | 70 | 13 | 21 | D | | | 17 | | 27 | C | |
| | EAST | 34 | 12 | 155 | A | 34 | 12 | 35 | C | | | 20 | | 59 | B | |
| | SOUTH | 70 | 11 | 4411 | A | 70 | 11 | 100 | B | | | 17 | | 155 | A | |
| | WEST | 0 | 0 | N/A | N/A | 0 | 0 | N/A | N/A | | | | | N/A | N/A | |
| ***Tenth Ave @ 33rd St*** | NORTH | 69 | 12 | 217 | A | 69 | 12 | 11 | E | Yes | | 17 | | 15 | D | |
| | EAST | 32 | 14 | 176 | A | 32 | 14 | 13 | E | Yes | | 20 | | 19 | D | |
| | SOUTH | 71 | 11 | 145 | A | 71 | 11 | 7 | E | Yes | | 17 | | 10 | E | Yes |
| | WEST | 35 | 13 | 222 | A | 35 | 13 | 9 | E | Yes | | 20 | | 14 | E | Yes |
| ***Tenth Ave @ 34th St*** | NORTH | 69 | 18 | 120 | B | 69 | 18 | 21 | D | | | | 43 | 25 | C | |
| | EAST | 59 | 13 | 300 | A | 59 | 13 | 27 | C | | | 20 | 37 | 34 | C | |
| | SOUTH | 68 | 18 | 145 | A | 68 | 18 | 16 | D | | | | 43 | 19 | D | |
| | WEST | 59 | 13 | 351 | A | 59 | 13 | 13 | E | Yes | | 20 | 37 | 17 | D | |

# Appendix S.5.5

**Pedestrian Improvement Analysis - Crosswalk Level of Service**

**2025 Future Conditions (AM)**

| Intersection | Crosswalk Location | 2025 Future without the Proposed Action | | | | 2025 Future with the Proposed Action | | | | | 2025 Future with the Proposed Action (Improvement) | | | | | |
|---|---|---|---|---|---|---|---|---|---|---|---|---|---|---|---|---|
| | | Crosswalk length (Curb-to-Curb | Crosswalk width | Pedestrian Space (s.f./ped.) | Surge Level of Service | Crosswalk length (Curb-to-Curb | Crosswalk width | Pedestrian Space (s.f./ped.) | Surge Level of Service | Impact? | Proposed Crosswalk length | Proposed Crosswalk width | Signal Timing | Pedestrian Space (s.f./ped.) | Surge Level of Service | Still Impact? |
| ***Tenth Ave @ 35th St*** | NORTH | 71 | 11 | 137 | A | 71 | 11 | 16 | D | | | 17 | 34 | 25 | C | |
| | EAST | 34 | 12 | 908 | A | 34 | 12 | 22 | D | | | 20 | 46 | 33 | C | |
| | SOUTH | 71 | 0 | N/A | N/A | 71 | 12 | 20 | D | | | 17 | 34 | 30 | C | |
| | WEST | 34 | 12 | 363 | A | 34 | 12 | 11 | E | Yes | | 20 | 46 | 18 | D | |
| ***Tenth Ave @ 36th St*** | NORTH | 70 | 10 | 501 | A | 70 | 10 | 31 | C | | | 17 | 31 | 53 | B | |
| | EAST | 37 | 12 | 67 | B | 37 | 12 | 19 | D | | | 20 | 49 | 32 | C | |
| | SOUTH | 70 | 11 | 116 | B | 70 | 11 | 35 | C | | | 17 | 31 | 55 | B | |
| | WEST | 36 | 12 | 98 | B | 36 | 12 | 15 | D | | | 20 | 49 | 24 | C | |
| ***Tenth Ave @ 37th St*** | NORTH | 70 | 10 | 274 | A | 70 | 10 | 23 | D | | | 17 | | 39 | C | |
| | EAST | 36 | 13 | 181 | A | 36 | 13 | 25 | C | | | 20 | | 39 | C | |
| | SOUTH | 70 | 10 | 914 | A | 70 | 10 | 21 | D | | | 17 | | 36 | C | |
| | WEST | 36 | 13 | 274 | A | 36 | 13 | 18 | D | | | 20 | | 27 | C | |
| ***Tenth Ave @ 38th St*** | NORTH | 70 | 10 | 891 | A | 70 | 10 | 26 | C | | | 17 | | 43 | B | |
| | EAST | 36 | 13 | 688 | A | 36 | 13 | 30 | C | | | 20 | | 46 | B | |
| | SOUTH | 70 | 10 | 2673 | A | 70 | 10 | 39 | C | | | 17 | | 66 | B | |
| | WEST | 36 | 13 | 551 | A | 36 | 13 | 18 | D | | | 20 | | 28 | C | |
| ***Tenth Ave @ 39th St*** | NORTH | 70 | 13 | 742 | A | 70 | 13 | 56 | B | | | 17 | | 73 | B | |
| | EAST | 36 | 10 | 263 | A | 36 | 10 | 15 | D | | | 20 | | 29 | C | |
| | SOUTH | 70 | 13 | 557 | A | 70 | 13 | 41 | B | | | 17 | | 54 | B | |
| | WEST | 50 | 11 | 761 | A | 50 | 11 | 19 | D | | | 20 | | 34 | C | |
| ***Tenth Ave @ 40th St*** | NORTH | 69.5 | 11 | 863 | A | 69.5 | 11 | 49 | B | | | 17 | | 75 | B | |
| | EAST | 40.3 | 13 | 247 | A | 40.3 | 13 | 16 | D | | | 20 | | 24 | C | |
| | SOUTH | 74.9 | 10 | 1831 | A | 74.9 | 10 | 208 | A | | | 17 | | 354 | A | |
| | WEST | 32.7 | 13 | 850 | A | 32.7 | 13 | 14 | E | Yes | | 20 | | 22 | D | |
| ***Tenth Ave @ 41st St*** | NORTH | 68.9 | 13.8 | 193 | A | 68.9 | 13.8 | 85 | B | | | 17 | | 105 | B | |
| | EAST | 60.8 | 13.1 | 264 | A | 60.8 | 13.1 | 28 | C | | | 20 | | 43 | B | |
| | SOUTH | 69.5 | 13.5 | 4437 | A | 69.5 | 13.5 | 24 | C | | | 17 | | 31 | C | |
| | WEST | 30 | 11.1 | 211 | A | 30 | 11.1 | 14 | E | Yes | | 20 | | 25 | C | |
| ***Tenth Ave @ 42nd St*** | NORTH | 59.3 | 17.3 | 46 | B | 59.3 | 17.3 | 36 | C | | | | 34 | 39 | C | |
| | EAST | 59.3 | 14.5 | 230 | A | 59.3 | 14.5 | 46 | B | | | 20 | 46 | 58 | B | |
| | SOUTH | 68.4 | 13.8 | 74 | B | 68.4 | 13.8 | 19 | D | | | 17 | 34 | 26 | C | |
| | WEST | 68.2 | 15 | 381 | A | 68.2 | 15 | 63 | B | | | 20 | 46 | 76 | B | |
| ***Dyer @ 42nd St*** | NORTH | 0 | 0 | N/A | N/A | 0 | 0 | N/A | N/A | | | | | N/A | N/A | |
| | EAST | 36 | 13.6 | 801 | A | 36 | 13.6 | 801 | A | | | | | 801 | A | |
| | SOUTH | 40 | 14 | 92 | B | 40 | 14 | 100 | B | | | | | 100 | B | |
| | WEST | 36 | 12 | 884 | A | 36 | 12 | 884 | A | | | | | 884 | A | |
| ***Ninth Ave @ 30th St*** | NORTH | 69.3 | 11.7 | 107 | B | 69.3 | 11.7 | 54 | B | | | 17 | 38 | 80 | B | |
| | EAST | 35.5 | 14.3 | 62 | B | 35.5 | 14.3 | 30 | C | | | 20 | 42 | 41 | B | |
| | SOUTH | 63 | 15.1 | 112 | B | 63 | 15.1 | 86 | B | | | 17 | 38 | 99 | B | |
| | WEST | 97.6 | 14.5 | 63 | B | 97.6 | 14.5 | 45 | B | | | 20 | 42 | 60 | B | |

# Appendix S.5.5

**Pedestrian Improvement Analysis - Crosswalk Level of Service**

**2025 Future Conditions (AM)**

| Intersection | Crosswalk Location | 2025 Future without the Proposed Action | | | | 2025 Future with the Proposed Action | | | | | 2025 Future with the Proposed Action (Improvement) | | | | | |
|---|---|---|---|---|---|---|---|---|---|---|---|---|---|---|---|---|
| | | Crosswalk length (Curb-to-Curb | Crosswalk width | Pedestrian Space (s.f./ped.) | Surge Level of Service | Crosswalk length (Curb-to-Curb | Crosswalk width | Pedestrian Space (s.f./ped.) | Surge Level of Service | Impact? | Proposed Crosswalk length | Proposed Crosswalk width | Signal Timing | Pedestrian Space (s.f./ped.) | Surge Level of Service | Still Impact? |
| ***Ninth Ave @ 31st St*** | NORTH | 73 | 24 | 111 | B | 73 | 24 | 49 | B | | | | | 49 | B | |
| | EAST | 32 | 24 | 76 | B | 32 | 24 | 52 | B | | | | | 52 | B | |
| | SOUTH | 67.2 | 14 | 71 | B | 67.2 | 14 | 45 | B | | | 17 | | 54 | B | |
| | WEST | 35.5 | 13 | 84 | B | 35.5 | 13 | 40 | B | | | 20 | | 61 | B | |
| ***Ninth Ave @ 33rd St*** | NORTH | 68 | 12.5 | 36 | C | 68 | 12.5 | 15 | D | | | 17 | 33 | 21 | D | |
| | EAST | 35.2 | 24 | 58 | B | 35.2 | 24 | 21 | D | | | | 47 | 20 | D | |
| | SOUTH | 68.4 | 24 | 27 | C | 68.4 | 24 | 13 | E | Yes | | | 33 | 13 | E | Yes |
| | WEST | 32.5 | 13.5 | 28 | C | 32.5 | 13.5 | 9 | E | Yes | | 20 | 47 | 13 | E | Yes |
| ***Ninth Ave @ 34th St*** | NORTH | 69.3 | 20 | 61 | B | 69.3 | 20 | 25 | C | | | | 35 | 27 | C | |
| | EAST | 51.7 | 15 | 43 | B | 51.7 | 15 | 24 | C | | | 20 | 25 | 28 | C | |
| | SOUTH | 66.9 | 20 | 49 | B | 66.9 | 20 | 17 | D | | | | 35 | 19 | D | |
| | WEST | 60.5 | 15 | 76 | B | 60.5 | 15 | 29 | C | | | 20 | 25 | 34 | C | |
| ***Ninth Ave @ 37th St*** | NORTH | 70 | 10 | 349 | A | 70 | 10 | 41 | B | | | | 32 | 42 | B | |
| | EAST | 36 | 13 | 47 | B | 36 | 13 | 23 | D | | | 20 | 48 | 35 | C | |
| | SOUTH | 70 | 10 | 334 | A | 70 | 10 | 50 | B | | | | 32 | 51 | B | |
| | WEST | 36 | 13 | 30 | C | 36 | 13 | 19 | D | | | 20 | 48 | 29 | C | |
| ***Ninth Ave @ 38th St*** | NORTH | 70 | 9 | 425 | A | 70 | 9 | 55 | B | | | | | 55 | B | |
| | EAST | 37 | 13 | 51 | B | 37 | 13 | 19 | D | | | 20 | | 30 | C | |
| | SOUTH | 70 | 9 | 451 | A | 70 | 9 | 49 | B | | | | | 49 | B | |
| | WEST | 37 | 13 | 116 | B | 37 | 13 | 53 | B | | | | | 53 | B | |
| ***Ninth Ave @ 39th St*** | NORTH | 70 | 10 | 187 | A | 70 | 10 | 79 | B | | | | | 79 | B | |
| | EAST | 36 | 13 | 49 | B | 36 | 13 | 17 | D | | | 20 | | 27 | C | |
| | SOUTH | 70 | 10 | 157 | A | 70 | 10 | 54 | B | | | | | 54 | B | |
| | WEST | 36 | 13 | 105 | B | 36 | 13 | 52 | B | | | | | 52 | B | |
| ***Ninth Ave @ 42nd St*** | NORTH | 69 | 14.7 | 34 | C | 69 | 14.7 | 27 | C | | | 17 | | 32 | C | |
| | EAST | 60.8 | 13.8 | 38 | C | 60.8 | 13.8 | 26 | C | | | 20 | | 37 | C | |
| | SOUTH | 70.5 | 10 | 28 | C | 70.5 | 10 | 17 | D | | | 17 | | 28 | C | |
| | WEST | 59.2 | 12.5 | 47 | B | 59.2 | 12.5 | 29 | C | | | 20 | | 47 | B | |
| ***Eighth Ave @ 30th St*** | NORTH | 69.2 | 12 | 136 | A | 69.2 | 12 | 98 | B | | | | | 98 | B | |
| | EAST | 31.3 | 12.6 | 31 | C | 31.3 | 12.6 | 15 | D | | | 20 | | 24 | C | |
| | SOUTH | 70.1 | 11.5 | 184 | A | 70.1 | 11.5 | 132 | A | | | | | 132 | A | |
| | WEST | 32.9 | 12.5 | 41 | B | 32.9 | 12.5 | 25 | C | | | 20 | | 40 | B | |
| ***Eighth Ave @ 31st St*** | NORTH | 70 | 24 | 55 | B | 70 | 24 | 49 | B | | | | | 49 | B | |
| | EAST | 42 | 14.5 | 28 | C | 42 | 14.5 | 13 | E | Yes | | 20 | | 18 | D | |
| | SOUTH | 70 | 14.5 | 102 | B | 70 | 14.5 | 61 | B | | | | | 61 | B | |
| | WEST | 34 | 24 | 61 | B | 34 | 24 | 46 | B | | | | | 46 | B | |
| ***Eighth Ave @ 33rd St*** | NORTH | 66.4 | 14.5 | 23 | D | 66.4 | 14.5 | 18 | D | | | 17 | 42 | 19 | D | |
| | EAST | 31.7 | 20 | 19 | D | 31.7 | 20 | 9 | E | Yes | | | 38 | 9 | E | Yes |
| | SOUTH | 70.2 | 24 | 28 | C | 70.2 | 24 | 24 | C | | | | 42 | 22 | D | |
| | WEST | 32.5 | 24 | 9 | E | 32.5 | 24 | 8 | E | Yes | | | 38 | 9 | E | |
| ***Eighth Ave @ 34th St*** | NORTH | 66.8 | 20 | 38 | C | 66.8 | 20 | 25 | C | | | | 33 | 23 | D | |
| | EAST | 53.5 | 13 | 27 | C | 53.5 | 13 | 13 | E | Yes | | 20 | 35 | 19 | D | |
| | SOUTH | 67.7 | 20 | 46 | B | 67.7 | 20 | 30 | C | | | | 33 | 27 | C | |
| | WEST | 54.3 | 13 | 19 | D | 54.3 | 13 | 15 | D | | | 20 | 35 | 21 | D | |

# Appendix S.5.5

**Pedestrian Improvement Analysis - Crosswalk Level of Service**

**2025 Future Conditions (AM)**

| Intersection | Crosswalk Location | 2025 Future without the Proposed Action | | | | 2025 Future with the Proposed Action | | | | | 2025 Future with the Proposed Action (Improvement) | | | | | |
|---|---|---|---|---|---|---|---|---|---|---|---|---|---|---|---|---|
| | | Crosswalk length (Curb-to-Curb | Crosswalk width | Pedestrian Space (s.f./ped.) | Surge Level of Service | Crosswalk length (Curb-to-Curb | Crosswalk width | Pedestrian Space (s.f./ped.) | Surge Level of Service | Impact? | Proposed Crosswalk length | Proposed Crosswalk width | Signal Timing | Pedestrian Space (s.f./ped.) | Surge Level of Service | Still Impact? |
| ***Eighth Ave @ 37th St*** | NORTH | 70 | 11 | 97 | B | 70 | 11 | 68 | B | | | | | 68 | B | |
| | EAST | 36 | 13 | 20 | D | 36 | 13 | 17 | D | | | 20 | | 26 | C | |
| | SOUTH | 70 | 11 | 88 | B | 70 | 11 | 52 | B | | | | | 52 | B | |
| | WEST | 35 | 13 | 13 | E | 35 | 13 | 13 | E | | | 20 | | 19 | D | |
| ***Eighth Ave @ 38th St*** | NORTH | 70 | 12 | 223 | A | 70 | 12 | 123 | B | | | | | 123 | B | |
| | EAST | 36 | 15 | 53 | B | 36 | 15 | 44 | B | | | 20 | | 59 | B | |
| | SOUTH | 70 | 12 | 185 | A | 70 | 12 | 88 | B | | | | | 88 | B | |
| | WEST | 38 | 15 | 28 | C | 38 | 15 | 24 | C | | | 20 | | 32 | C | |
| ***Eighth Ave @ 39th St*** | NORTH | 70 | 10 | 65 | B | 70 | 10 | 71 | B | | | | | 71 | B | |
| | EAST | 36 | 13 | 9 | E | 36 | 13 | 8 | E | Yes | | 20 | | 13 | E | |
| | SOUTH | 70 | 10 | 59 | B | 70 | 10 | 48 | B | | | | | 48 | B | |
| | WEST | 36 | 13 | 10 | E | 36 | 13 | 10 | E | | | 20 | | 15 | D | |
| ***Eighth Ave @ 42nd St*** | NORTH | 71 | 19 | 22 | D | 71 | 19 | 20 | D | | | 20 | 30 | 23 | D | |
| | EAST | 55 | 26 | 31 | C | 55 | 26 | 29 | C | | | | 37 | 30 | C | |
| | SOUTH | 69 | 19 | 9 | E | 69 | 19 | 9 | E | | | 20 | 30 | 10 | E | |
| | WEST | 60 | 27 | 18 | D | 60 | 27 | 17 | D | | | | 37 | 17 | D | |
| ***Seventh Ave @ 31st St*** | NORTH | 75 | 11 | 14 | E | 75 | 11 | 12 | E | Yes | | 17 | 40 | 19 | D | |
| | EAST | 34 | 17 | 21 | D | 34 | 17 | 19 | D | | | 23 | 40 | 24 | C | |
| | SOUTH | 60 | 11 | 26 | C | 60 | 11 | 23 | D | | | 17 | 40 | 37 | C | |
| | WEST | 42 | 17 | 20 | D | 42 | 17 | 17 | D | | | 23 | 40 | 22 | D | |
| ***Seventh Ave @ 33rd St*** | NORTH | 60 | 11 | 10 | E | 60 | 11 | 9 | E | Yes | | 17 | 23 | 14 | E | |
| | EAST | 34 | 17 | 18 | D | 34 | 17 | 17 | D | | | 20 | 57 | 20 | D | |
| | SOUTH | 70 | 11 | 8 | E | 70 | 11 | 7 | E | Yes | | 17 | 23 | 11 | E | |
| | WEST | 30 | 17 | 15 | D | 30 | 17 | 12 | E | Yes | | 20 | 57 | 14 | E | Yes |
| ***Seventh Ave @ 34th St*** | NORTH | 60 | 21 | 23 | D | 60 | 21 | 21 | D | | | | 38 | 21 | D | |
| | EAST | 54 | 18 | 31 | C | 54 | 18 | 29 | C | | | 20 | 41 | 30 | C | |
| | SOUTH | 60 | 21 | 20 | D | 60 | 21 | 18 | D | | | | 38 | 19 | D | |
| | WEST | 54 | 18 | 12 | E | 54 | 18 | 11 | E | Yes | | 20 | 41 | 12 | E | |
| ***Sixth Ave @ 33rd St*** | NORTH | 120 | 15 | 36 | C | 120 | 15 | 34 | C | | | 17 | 25 | 38 | C | |
| | EAST | 34 | 25 | 187 | A | 34 | 25 | 180 | A | | | | | 180 | A | |
| | SOUTH | 160 | 20 | 50 | B | 160 | 20 | 38 | C | | | | 25 | 38 | C | |
| | WEST | 34 | 24 | 22 | D | 34 | 24 | 22 | D | | | | 37 | 21 | D | |
| ***Sixth Ave @ 34th St*** | NORTH | 156 | 21 | 47 | B | 156 | 21 | 46 | B | | | | | 46 | B | |
| | EAST | 54 | 15 | 18 | D | 54 | 15 | 18 | D | | | 20 | | 24 | C | |
| | SOUTH | 116 | 21 | 33 | C | 116 | 21 | 32 | C | | | | | 32 | C | |
| | WEST | 0 | 0 | N/A | N/A | 0 | 0 | N/A | N/A | | | | | N/A | N/A | |
| ***Broadway @ 34th St*** | NORTH | 156 | 21 | 22 | D | 156 | 21 | 21 | D | | | | | 21 | D | |
| | EAST | 0 | 0 | N/A | N/A | 0 | 0 | N/A | N/A | | | | | N/A | N/A | |
| | SOUTH | 116 | 21 | 32 | C | 116 | 21 | 32 | C | | | | | 32 | C | |
| | WEST | 54 | 28 | 39 | C | 54 | 28 | 36 | C | | | | | 36 | C | |
| ***Blvd @ 33rd St*** | NORTH | 0 | 0 | N/A | N/A | 30 | 25 | 8 | E | | | | | 10 | E | |
| | EAST | 0 | 0 | N/A | N/A | 35 | 20 | 16 | D | | | | | 15 | D | |
| | SOUTH | 0 | 0 | N/A | N/A | 0 | 0 | N/A | N/A | | | | | N/A | N/A | |
| | WEST | 0 | 0 | N/A | N/A | 35 | 20 | 9 | E | | | | | 9 | E | |

# Appendix S.5.5

**Pedestrian Improvement Analysis - Crosswalk Level of Service**

**2025 Future Conditions (AM)**

| Intersection | Crosswalk Location | 2025 Future without the Proposed Action | | | | 2025 Future with the Proposed Action | | | | | 2025 Future with the Proposed Action (Improvement) | | | | | |
|---|---|---|---|---|---|---|---|---|---|---|---|---|---|---|---|---|
| | | Crosswalk length (Curb-to-Curb | Crosswalk width | Pedestrian Space (s.f./ped.) | Surge Level of Service | Crosswalk length (Curb-to-Curb | Crosswalk width | Pedestrian Space (s.f./ped.) | Surge Level of Service | Impact? | Proposed Crosswalk length | Proposed Crosswalk width | Signal Timing | Pedestrian Space (s.f./ped.) | Surge Level of Service | Still Impact? |
| ***Blvd @ 34th St*** | NORTH | 0 | 0 | N/A | N/A | 30 | 20 | 13 | E | | | | | 13 | E | |
| | EAST | 0 | 0 | N/A | N/A | 59 | 20 | 35 | C | | | | | 35 | C | |
| | SOUTH | 0 | 0 | N/A | N/A | 30 | 20 | 11 | E | | | | | 11 | E | |
| | WEST | 0 | 0 | N/A | N/A | 59 | 20 | 39 | C | | | | | 39 | C | |
| ***N.Blvd @ 35th St*** | NORTH | 0 | 0 | N/A | N/A | 30 | 20 | 14 | E | | | | | 14 | E | |
| | EAST | 0 | 0 | N/A | N/A | 34 | 20 | 14 | E | | | | | 14 | E | |
| | SOUTH | 0 | 0 | N/A | N/A | 30 | 20 | 10 | E | | | | | 10 | E | |
| | WEST | 0 | 0 | N/A | N/A | 0 | 0 | N/A | N/A | | | | | N/A | N/A | |
| ***N.Blvd @ 36th St*** | NORTH | 0 | 0 | N/A | N/A | 30 | 20 | 62 | B | | | | | 62 | B | |
| | EAST | 0 | 0 | N/A | N/A | 36 | 20 | 31 | C | | | | | 31 | C | |
| | SOUTH | 0 | 0 | N/A | N/A | 30 | 20 | 23 | D | | | | | 23 | D | |
| | WEST | 0 | 0 | N/A | N/A | 0 | 0 | N/A | N/A | | | | | N/A | N/A | |
| ***N.Blvd @ 37th St*** | NORTH | 0 | 0 | N/A | N/A | 30 | 20 | 35 | C | | | | | 35 | C | |
| | EAST | 0 | 0 | N/A | N/A | 36 | 20 | 33 | C | | | | | 33 | C | |
| | SOUTH | 0 | 0 | N/A | N/A | 30 | 20 | 54 | B | | | | | 54 | B | |
| | WEST | 0 | 0 | N/A | N/A | 0 | 0 | N/A | N/A | | | | | N/A | N/A | |
| ***Blvd @ 38th St*** | NORTH | 0 | 0 | N/A | N/A | 36 | 20 | 45 | B | | | | | 45 | B | |
| | EAST | 0 | 0 | N/A | N/A | 36 | 20 | 30 | C | | | | | 30 | C | |
| | SOUTH | 0 | 0 | N/A | N/A | 30 | 20 | 32 | C | | | | | 32 | C | |
| | WEST | 0 | 0 | N/A | N/A | 36 | 20 | 10 | E | | | | | 10 | E | |
| ***S.Blvd @ 35th St*** | NORTH | 0 | 0 | N/A | N/A | 30 | 20 | 12 | E | | | | | 12 | E | |
| | EAST | 0 | 0 | N/A | N/A | 0 | 0 | N/A | N/A | | | | | N/A | N/A | |
| | SOUTH | 0 | 0 | N/A | N/A | 0 | 0 | N/A | N/A | | | | | N/A | N/A | |
| | WEST | 0 | 0 | N/A | N/A | 37 | 20 | 12 | E | | | | | 12 | E | |
| ***S.Blvd @ 36th St*** | NORTH | 0 | 0 | N/A | N/A | 30 | 20 | 53 | B | | | | | 53 | B | |
| | EAST | 0 | 0 | N/A | N/A | 0 | 0 | N/A | N/A | | | | | N/A | N/A | |
| | SOUTH | 0 | 0 | N/A | N/A | 30 | 20 | 20 | D | | | | | 20 | D | |
| | WEST | 0 | 0 | N/A | N/A | 35 | 20 | 28 | C | | | | | 28 | C | |
| ***S.Blvd @ 37th St*** | NORTH | 0 | 0 | N/A | N/A | 30 | 20 | 35 | C | | | | | 35 | C | |
| | EAST | 0 | 0 | N/A | N/A | 0 | 0 | N/A | N/A | | | | | N/A | N/A | |
| | SOUTH | 0 | 0 | N/A | N/A | 30 | 20 | 54 | B | | | | | 54 | B | |
| | WEST | 0 | 0 | N/A | N/A | 36 | 20 | 16 | D | | | | | 16 | D | |

# Appendix S.5.5

**Pedestrian Improvement Analysis - Crosswalk Level of Service**

**2025 Future Conditions (MD)**

| Intersection | Crosswalk Location | 2025 Future without the Proposed Action | | | | 2025 Future with the Proposed Action | | | | | 2025 Future with the Proposed Action (Improvement) | | | | | |
|---|---|---|---|---|---|---|---|---|---|---|---|---|---|---|---|---|
| | | Crosswalk length (Curb-to-Curb | Crosswalk width | Pedestrian Space (s.f./ped.) | Surge Level of Service | Crosswalk length (Curb-to-Curb | Crosswalk width | Pedestrian Space (s.f./ped.) | Surge Level of Service | Impact? | Proposed Crosswalk length | Proposed Crosswalk width | Signal Timing | Pedestrian Space (s.f./ped.) | Surge Level of Service | Still Impact? |
| ***Twelfth Ave @ 30th St*** | NORTH | 0 | 0 | N/A | N/A | 0 | 0 | N/A | N/A | | | | | N/A | N/A | |
| | EAST | 33 | 19 | 3118 | A | 33 | 19 | 1559 | A | | | | 69 | 1533 | A | |
| | SOUTH | 141 | 15 | 7302 | A | 141 | 15 | 2921 | A | | | | | 2921 | A | |
| | WEST | 0 | 0 | N/A | N/A | 0 | 0 | N/A | N/A | | | | 69 | N/A | N/A | |
| ***Twelfth Ave @ 34th St*** | NORTH | 0 | 0 | N/A | N/A | 0 | 0 | N/A | N/A | | | | 33 | N/A | N/A | |
| | EAST | 60 | 14 | 2476 | A | 60 | 14 | 1415 | A | | | 20 | 54 | 2623 | A | |
| | SOUTH | 120 | 15 | 127 | B | 120 | 15 | 123 | B | | | 17 | 33 | 144 | A | |
| | WEST | 0 | 0 | N/A | N/A | 0 | 0 | N/A | N/A | | | | 54 | N/A | N/A | |
| ***Twelfth Ave @ 39th St*** | NORTH | 0 | 0 | N/A | N/A | 131 | 20 | 233 | A | | | | | 233 | A | |
| | EAST | 49 | 11 | 571 | A | 0 | 0 | N/A | N/A | | | | 67 | N/A | N/A | |
| | SOUTH | 131 | 15 | 226 | A | 0 | 0 | N/A | N/A | | | | | N/A | N/A | |
| | WEST | 0 | 0 | N/A | N/A | 0 | 0 | N/A | N/A | | | | 67 | N/A | N/A | |
| ***Twelfth Ave @ 40th St*** | NORTH | 0 | 0 | N/A | N/A | 0 | 0 | N/A | N/A | | | | | N/A | N/A | |
| | EAST | 38 | 14 | 1792 | A | 0 | 0 | N/A | N/A | | | | | N/A | N/A | |
| | SOUTH | 139 | 15 | 15270 | A | 0 | 0 | N/A | N/A | | | | | N/A | N/A | |
| | WEST | 0 | 0 | N/A | N/A | 0 | 0 | N/A | N/A | | | | | N/A | N/A | |
| ***Twelfth Ave @ 42nd St*** | NORTH | 140 | 15 | 138 | A | 140 | 15 | 141 | A | | | 17 | | 159 | A | |
| | EAST | 70 | 15 | 721 | A | 70 | 15 | 631 | A | | | 20 | | 842 | A | |
| | SOUTH | 140 | 15 | 156 | A | 140 | 15 | 156 | A | | | 17 | | 177 | A | |
| | WEST | 0 | 0 | N/A | N/A | 0 | 0 | N/A | N/A | | | | | N/A | N/A | |
| ***Eleventh Ave @ 29th St*** | NORTH | 70 | 11 | 3370 | A | 70 | 11 | 632 | A | | | 17 | | 1116 | A | |
| | EAST | 34 | 13 | 58 | B | 34 | 13 | 14 | E | Yes | | 20 | | 22 | D | |
| | SOUTH | 70 | 11 | 3370 | A | 70 | 11 | 3370 | A | | | 17 | | 5207 | A | |
| | WEST | 34 | 13 | 146 | A | 34 | 13 | 21 | D | | | 20 | | 32 | C | |
| ***Eleventh Ave @ 30th St*** | NORTH | 70 | 11 | 125 | B | 70 | 11 | 50 | B | | | 17 | | 77 | B | |
| | EAST | 34 | 13 | 71 | B | 34 | 13 | 9 | E | Yes | | 20 | | 14 | E | Yes |
| | SOUTH | 70 | 11 | 3370 | A | 70 | 11 | 87 | B | | | 17 | | 135 | A | |
| | WEST | 34 | 13 | 94 | B | 34 | 13 | 18 | D | | | 20 | | 28 | C | |
| ***Eleventh Ave @ 33rd St*** | NORTH | 70 | 11 | 2765 | A | 70 | 11 | 66 | B | | | 17 | | 102 | B | |
| | EAST | 34 | 13 | 165 | A | 34 | 13 | 18 | D | | | 20 | | 28 | C | |
| | SOUTH | 70 | 11 | 4147 | A | 70 | 11 | 66 | B | | | 17 | | 103 | B | |
| | WEST | 36 | 13 | 1145 | A | 0 | 0 | N/A | N/A | | | | | N/A | N/A | |
| ***Eleventh Ave @ 34th St*** | NORTH | 73 | 18 | 167 | A | 73 | 18 | 63 | B | | | 20 | 28 | 71 | B | |
| | EAST | 59 | 12 | 60 | B | 59 | 12 | 16 | D | | | 20 | 40 | 22 | D | |
| | SOUTH | 71 | 18 | 210 | A | 71 | 18 | 64 | B | | | 20 | 28 | 72 | B | |
| | WEST | 60 | 13 | 227 | A | 60 | 13 | 39 | C | | | 20 | 40 | 48 | B | |
| ***Eleventh Ave @ 35th St*** | NORTH | 87 | 10 | 1546 | A | 87 | 10 | 157 | A | | | 17 | | 267 | A | |
| | EAST | 37 | 11 | 38 | C | 37 | 11 | 8 | E | Yes | | 20 | | 15 | D | |
| | SOUTH | 87 | 11 | 2977 | A | 87 | 11 | 108 | B | | | 17 | | 167 | A | |
| | WEST | 0 | 0 | N/A | N/A | 0 | 0 | N/A | N/A | | | | | N/A | N/A | |
| ***Eleventh Ave @ 36th St*** | NORTH | 86 | 11 | 3149 | A | 86 | 11 | 193 | A | | | 17 | | 298 | A | |
| | EAST | 35 | 10 | 29 | C | 35 | 10 | 5 | F | Yes | | 20 | | 10 | E | Yes |
| | SOUTH | 87 | 11 | 1907 | A | 87 | 11 | 99 | B | | | 17 | | 153 | A | |
| | WEST | 0 | 0 | N/A | N/A | 0 | 0 | N/A | N/A | | | | | N/A | N/A | |

# Appendix S.5.5

**Pedestrian Improvement Analysis - Crosswalk Level of Service**

**2025 Future Conditions (MD)**

| Intersection | Crosswalk Location | 2025 Future without the Proposed Action | | | | 2025 Future with the Proposed Action | | | | | 2025 Future with the Proposed Action (Improvement) | | | | | |
|---|---|---|---|---|---|---|---|---|---|---|---|---|---|---|---|---|
| | | Crosswalk length (Curb-to-Curb | Crosswalk width | Pedestrian Space (s.f./ped.) | Surge Level of Service | Crosswalk length (Curb-to-Curb | Crosswalk width | Pedestrian Space (s.f./ped.) | Surge Level of Service | Impact? | Proposed Crosswalk length | Proposed Crosswalk width | Signal Timing | Pedestrian Space (s.f./ped.) | Surge Level of Service | Still Impact? |
| ***Eleventh Ave @ 37th St*** | NORTH | 75 | 10 | 3850 | A | 75 | 10 | 164 | A | | | 17 | 30 | 306 | A | |
| | EAST | 36 | 8 | 49 | B | 36 | 8 | 9 | E | Yes | | 20 | 50 | 19 | D | |
| | SOUTH | 75 | 10 | 453 | A | 75 | 10 | 164 | A | | | 17 | 30 | 306 | A | |
| | WEST | 0 | 0 | N/A | N/A | 0 | 0 | N/A | N/A | | | | 50 | N/A | N/A | |
| ***Eleventh Ave @ 38th St*** | NORTH | 75 | 9 | 408 | A | 75 | 9 | 78 | B | | | 17 | | 147 | A | |
| | EAST | 38 | 8 | 191 | A | 38 | 8 | 8 | E | Yes | | 20 | | 21 | D | |
| | SOUTH | 75 | 9 | 2310 | A | 75 | 9 | 151 | A | | | 17 | | 285 | A | |
| | WEST | 0 | 0 | N/A | N/A | 0 | 0 | N/A | N/A | | | | | N/A | N/A | |
| ***Eleventh Ave @ 39th St*** | NORTH | 73 | 10 | 382 | A | 73 | 10 | 191 | A | | | 17 | 41 | 372 | A | |
| | EAST | 33 | 11 | 1273 | A | 33 | 11 | 19 | D | | | 20 | 39 | 30 | C | |
| | SOUTH | 76 | 12 | 168 | A | 76 | 12 | 127 | B | | | 17 | 41 | 206 | A | |
| | WEST | 36 | 13 | 810 | A | 0 | 0 | N/A | N/A | | | | 39 | N/A | N/A | |
| ***Eleventh Ave @ 40th St*** | NORTH | 75 | 11 | 2823 | A | 75 | 11 | 82 | B | | | | | 82 | B | |
| | EAST | 60 | 10 | 1862 | A | 60 | 10 | 22 | D | | | | | 22 | D | |
| | SOUTH | 75 | 11 | 1412 | A | 75 | 11 | 1412 | A | | | | | 1412 | A | |
| | WEST | 36 | 13 | 816 | A | 0 | 0 | N/A | N/A | | | | | N/A | N/A | |
| ***Eleventh Ave @ 42nd St*** | NORTH | 70 | 15 | 57 | B | 70 | 15 | 65 | B | | | 17 | | 73 | B | |
| | EAST | 69 | 13 | 234 | A | 69 | 13 | 33 | C | | | 20 | | 51 | B | |
| | SOUTH | 71 | 15 | 84 | B | 71 | 15 | 31 | C | | | 17 | | 35 | C | |
| | WEST | 68 | 14 | 199 | A | 68 | 14 | 53 | B | | | 20 | | 76 | B | |
| ***Tenth Ave @ 29th St*** | NORTH | 70 | 11 | 118 | B | 70 | 11 | 53 | B | | | 17 | | 82 | B | |
| | EAST | 34 | 13 | 64 | B | 34 | 13 | 21 | D | | | 20 | | 33 | C | |
| | SOUTH | 70 | 11 | 79 | B | 70 | 11 | 44 | B | | | 17 | | 67 | B | |
| | WEST | 34 | 13 | 47 | B | 34 | 13 | 8 | E | Yes | | 20 | | 12 | E | Yes |
| ***Tenth Ave @ 30th St*** | NORTH | 71 | 14 | 60 | B | 71 | 14 | 14 | E | Yes | | 17 | 31 | 17 | D | |
| | EAST | 35 | 16 | 85 | B | 35 | 16 | 24 | C | | | 20 | 49 | 29 | C | |
| | SOUTH | 74 | 13 | 188 | A | 74 | 13 | 42 | B | | | 17 | 31 | 56 | B | |
| | WEST | 35 | 18 | 65 | B | 35 | 18 | 8 | E | Yes | | 20 | 49 | 9 | E | Yes |
| ***Tenth Ave @ 31st St*** | NORTH | 70 | 13 | 86 | B | 70 | 13 | 20 | D | | | 17 | 33 | 27 | C | |
| | EAST | 34 | 12 | 48 | B | 34 | 12 | 14 | E | Yes | | 20 | 47 | 23 | D | |
| | SOUTH | 70 | 11 | 1103 | A | 70 | 11 | 47 | B | | | 17 | 33 | 75 | B | |
| | WEST | 0 | 0 | N/A | N/A | 0 | 0 | N/A | N/A | | | | 47 | N/A | N/A | |
| ***Tenth Ave @ 33rd St*** | NORTH | 69 | 12 | 32 | C | 69 | 12 | 12 | E | Yes | | 17 | | 17 | D | |
| | EAST | 32 | 14 | 40 | B | 32 | 14 | 10 | E | Yes | | 20 | | 14 | E | Yes |
| | SOUTH | 71 | 11 | 28 | C | 71 | 11 | 7 | E | Yes | | 17 | | 11 | E | Yes |
| | WEST | 35 | 13 | 37 | C | 35 | 13 | 4 | F | Yes | | 20 | | 6 | E | Yes |
| ***Tenth Ave @ 34th St*** | NORTH | 69 | 18 | 59 | B | 69 | 18 | 14 | E | Yes | | | 40 | 16 | D | |
| | EAST | 59 | 13 | 92 | B | 59 | 13 | 13 | E | Yes | | 20 | 40 | 16 | D | |
| | SOUTH | 68 | 18 | 101 | B | 68 | 18 | 9 | E | Yes | | | 40 | 10 | E | Yes |
| | WEST | 59 | 13 | 83 | B | 59 | 13 | 6 | E | Yes | | 20 | 40 | 8 | E | Yes |

# Appendix S.5.5

**Pedestrian Improvement Analysis - Crosswalk Level of Service**

**2025 Future Conditions (MD)**

| Intersection | Crosswalk Location | 2025 Future without the Proposed Action | | | | 2025 Future with the Proposed Action | | | | | 2025 Future with the Proposed Action (Improvement) | | | | | |
|---|---|---|---|---|---|---|---|---|---|---|---|---|---|---|---|---|
| | | Crosswalk length (Curb-to-Curb | Crosswalk width | Pedestrian Space (s.f./ped.) | Surge Level of Service | Crosswalk length (Curb-to-Curb | Crosswalk width | Pedestrian Space (s.f./ped.) | Surge Level of Service | Impact? | Proposed Crosswalk length | Proposed Crosswalk width | Signal Timing | Pedestrian Space (s.f./ped.) | Surge Level of Service | Still Impact? |
| ***Tenth Ave @ 35th St*** | NORTH | 71 | 11 | 104 | B | 71 | 11 | 12 | E | Yes | | 17 | | 19 | D | |
| | EAST | 34 | 12 | 80 | B | 34 | 12 | 9 | E | Yes | | 20 | | 16 | D | |
| | SOUTH | 71 | 0 | N/A | N/A | 71 | 12 | 13 | E | | | 17 | | 18 | D | |
| | WEST | 34 | 12 | 63 | B | 34 | 12 | 5 | F | Yes | | 20 | | 8 | E | Yes |
| ***Tenth Ave @ 36th St*** | NORTH | 70 | 10 | 120 | B | 70 | 10 | 19 | D | | | 17 | | 32 | C | |
| | EAST | 37 | 12 | 139 | A | 37 | 12 | 11 | E | Yes | | 20 | | 19 | D | |
| | SOUTH | 70 | 11 | 252 | A | 70 | 11 | 18 | D | | | 17 | | 27 | C | |
| | WEST | 36 | 12 | 95 | B | 36 | 12 | 6 | E | Yes | | 20 | | 11 | E | Yes |
| ***Tenth Ave @ 37th St*** | NORTH | 70 | 10 | 147 | A | 70 | 10 | 12 | E | Yes | | 17 | | 21 | D | |
| | EAST | 36 | 13 | 120 | B | 36 | 13 | 12 | E | Yes | | 20 | | 18 | D | |
| | SOUTH | 70 | 10 | 305 | A | 70 | 10 | 27 | C | | | 17 | | 45 | B | |
| | WEST | 36 | 13 | 120 | B | 36 | 13 | 8 | E | Yes | | 20 | | 13 | E | Yes |
| ***Tenth Ave @ 38th St*** | NORTH | 70 | 10 | 217 | A | 70 | 10 | 14 | E | Yes | | 17 | | 23 | D | |
| | EAST | 36 | 13 | 162 | A | 36 | 13 | 13 | E | Yes | | 20 | | 21 | D | |
| | SOUTH | 70 | 10 | 349 | A | 70 | 10 | 21 | D | | | 17 | | 35 | C | |
| | WEST | 36 | 13 | 184 | A | 36 | 13 | 11 | E | Yes | | 20 | | 18 | D | |
| ***Tenth Ave @ 39th St*** | NORTH | 70 | 13 | 242 | A | 70 | 13 | 70 | B | | | 17 | | 92 | B | |
| | EAST | 36 | 10 | 93 | B | 36 | 10 | 10 | E | Yes | | 20 | | 19 | D | |
| | SOUTH | 70 | 13 | 293 | A | 70 | 13 | 29 | C | | | 17 | | 38 | C | |
| | WEST | 50 | 11 | 164 | A | 50 | 11 | 15 | D | | | 20 | | 28 | C | |
| ***Tenth Ave @ 40th St*** | NORTH | 69.5 | 11 | 190 | A | 69.5 | 11 | 27 | C | | | 17 | | 42 | B | |
| | EAST | 40.3 | 13 | 370 | A | 40.3 | 13 | 13 | E | Yes | | 20 | | 20 | D | |
| | SOUTH | 74.9 | 10 | 538 | A | 74.9 | 10 | 129 | B | | | 17 | | 219 | A | |
| | WEST | 32.7 | 13 | 139 | A | 32.7 | 13 | 15 | D | | | 20 | | 22 | D | |
| ***Tenth Ave @ 41st St*** | NORTH | 68.9 | 13.8 | 171 | A | 68.9 | 13.8 | 56 | B | | | 17 | | 69 | B | |
| | EAST | 60.8 | 13.1 | 170 | A | 60.8 | 13.1 | 15 | D | | | 20 | | 23 | D | |
| | SOUTH | 69.5 | 13.5 | 283 | A | 69.5 | 13.5 | 28 | C | | | 17 | | 36 | C | |
| | WEST | 30 | 11.1 | 71 | B | 30 | 11.1 | 11 | E | Yes | | 20 | | 19 | D | |
| ***Tenth Ave @ 42nd St*** | NORTH | 59.3 | 17.3 | 37 | C | 59.3 | 17.3 | 31 | C | | | | | 31 | C | |
| | EAST | 59.3 | 14.5 | 168 | A | 59.3 | 14.5 | 26 | C | | | 20 | | 35 | C | |
| | SOUTH | 68.4 | 13.8 | 47 | B | 68.4 | 13.8 | 15 | D | | | 17 | | 18 | D | |
| | WEST | 68.2 | 15 | 173 | A | 68.2 | 15 | 46 | B | | | 20 | | 61 | B | |
| ***Dyer @ 42nd St*** | NORTH | 0 | 0 | N/A | N/A | 0 | 0 | N/A | N/A | | | | | N/A | N/A | |
| | EAST | 36 | 13.6 | 1145 | A | 36 | 13.6 | 1145 | A | | | | | 1145 | A | |
| | SOUTH | 40 | 14 | 77 | B | 40 | 14 | 77 | B | | | | | 77 | B | |
| | WEST | 36 | 12 | 1414 | A | 36 | 12 | 1414 | A | | | | | 1414 | A | |
| ***Ninth Ave @ 30th St*** | NORTH | 69.3 | 11.7 | 47 | B | 69.3 | 11.7 | 21 | D | | | 17 | | 31 | C | |
| | EAST | 35.5 | 14.3 | 17 | D | 35.5 | 14.3 | 9 | E | Yes | | 20 | | 13 | E | Yes |
| | SOUTH | 63 | 15.1 | 113 | B | 63 | 15.1 | 71 | B | | | 17 | | 80 | B | |
| | WEST | 97.6 | 14.5 | 48 | B | 97.6 | 14.5 | 23 | D | | | 20 | | 31 | C | |

# Appendix S.5.5

**Pedestrian Improvement Analysis - Crosswalk Level of Service**

**2025 Future Conditions (MD)**

| Intersection | Crosswalk Location | 2025 Future without the Proposed Action | | | | 2025 Future with the Proposed Action | | | | | 2025 Future with the Proposed Action (Improvement) | | | | | |
|---|---|---|---|---|---|---|---|---|---|---|---|---|---|---|---|---|
| | | Crosswalk length (Curb-to-Curb | Crosswalk width | Pedestrian Space (s.f./ped.) | Surge Level of Service | Crosswalk length (Curb-to-Curb | Crosswalk width | Pedestrian Space (s.f./ped.) | Surge Level of Service | Impact? | Proposed Crosswalk length | Proposed Crosswalk width | Signal Timing | Pedestrian Space (s.f./ped.) | Surge Level of Service | Still Impact? |
| ***Ninth Ave @ 31st St*** | NORTH | 73 | 24 | 40 | B | 73 | 24 | 28 | C | | | | | 28 | C | |
| | EAST | 32 | 24 | 20 | D | 32 | 24 | 13 | E | Yes | | | | 13 | E | Yes |
| | SOUTH | 67.2 | 14 | 41 | B | 67.2 | 14 | 28 | C | | | 17 | | 34 | C | |
| | WEST | 35.5 | 13 | 24 | C | 35.5 | 13 | 12 | E | Yes | | 20 | | 18 | D | |
| ***Ninth Ave @ 33rd St*** | NORTH | 68 | 12.5 | 27 | C | 68 | 12.5 | 18 | D | | | 17 | | 25 | C | |
| | EAST | 35.2 | 24 | 18 | D | 35.2 | 24 | 10 | E | Yes | | | | 10 | E | Yes |
| | SOUTH | 68.4 | 24 | 27 | C | 68.4 | 24 | 16 | D | | | | | 16 | D | |
| | WEST | 32.5 | 13.5 | 13 | E | 32.5 | 13.5 | 6 | E | Yes | | 20 | | 9 | E | Yes |
| ***Ninth Ave @ 34th St*** | NORTH | 69.3 | 20 | 36 | C | 69.3 | 20 | 22 | D | | | | | 22 | D | |
| | EAST | 51.7 | 15 | 16 | D | 51.7 | 15 | 10 | E | Yes | | 20 | | 13 | E | Yes |
| | SOUTH | 66.9 | 20 | 48 | B | 66.9 | 20 | 19 | D | | | | | 19 | D | |
| | WEST | 60.5 | 15 | 27 | C | 60.5 | 15 | 13 | E | Yes | | 20 | | 17 | D | |
| ***Ninth Ave @ 37th St*** | NORTH | 70 | 10 | 76 | B | 70 | 10 | 22 | D | | | | | 22 | D | |
| | EAST | 36 | 13 | 27 | C | 36 | 13 | 10 | E | Yes | | 20 | | 15 | D | |
| | SOUTH | 70 | 10 | 104 | B | 70 | 10 | 36 | C | | | | | 36 | C | |
| | WEST | 36 | 13 | 26 | C | 36 | 13 | 11 | E | Yes | | 20 | | 16 | D | |
| ***Ninth Ave @ 38th St*** | NORTH | 70 | 9 | 278 | A | 70 | 9 | 35 | C | | | | 31 | 35 | C | |
| | EAST | 37 | 13 | 61 | B | 37 | 13 | 13 | E | Yes | | 20 | 49 | 20 | D | |
| | SOUTH | 70 | 9 | 278 | A | 70 | 9 | 35 | C | | | | 31 | 35 | C | |
| | WEST | 37 | 13 | 65 | B | 37 | 13 | 19 | D | | | | 49 | 19 | D | |
| ***Ninth Ave @ 39th St*** | NORTH | 70 | 10 | 108 | B | 70 | 10 | 62 | B | | | | | 62 | B | |
| | EAST | 36 | 13 | 39 | C | 36 | 13 | 13 | E | Yes | | 20 | | 19 | D | |
| | SOUTH | 70 | 10 | 76 | B | 70 | 10 | 31 | C | | | | | 31 | C | |
| | WEST | 36 | 13 | 113 | B | 36 | 13 | 29 | C | | | | | 29 | C | |
| ***Ninth Ave @ 42nd St*** | NORTH | 69 | 14.7 | 27 | C | 69 | 14.7 | 23 | D | | | 17 | 28 | 27 | C | |
| | EAST | 60.8 | 13.8 | 32 | C | 60.8 | 13.8 | 20 | D | | | 20 | | 29 | C | |
| | SOUTH | 70.5 | 10 | 19 | D | 70.5 | 10 | 12 | E | Yes | | 17 | 28 | 20 | D | |
| | WEST | 59.2 | 12.5 | 32 | C | 59.2 | 12.5 | 19 | D | | | 20 | | 31 | C | |
| ***Eighth Ave @ 30th St*** | NORTH | 69.2 | 12 | 98 | B | 69.2 | 12 | 71 | B | | | | | 71 | B | |
| | EAST | 31.3 | 12.6 | 22 | D | 31.3 | 12.6 | 9 | E | Yes | | 20 | | 15 | D | |
| | SOUTH | 70.1 | 11.5 | 102 | B | 70.1 | 11.5 | 76 | B | | | | | 76 | B | |
| | WEST | 32.9 | 12.5 | 22 | D | 32.9 | 12.5 | 15 | D | | | 20 | | 25 | C | |
| ***Eighth Ave @ 31st St*** | NORTH | 70 | 24 | 38 | C | 70 | 24 | 31 | C | | | | | 31 | C | |
| | EAST | 42 | 14.5 | 28 | C | 42 | 14.5 | 10 | E | Yes | | 20 | | 13 | E | Yes |
| | SOUTH | 70 | 14.5 | 60 | B | 70 | 14.5 | 39 | C | | | | | 39 | C | |
| | WEST | 34 | 24 | 30 | C | 34 | 24 | 23 | D | | | | | 23 | D | |
| ***Eighth Ave @ 33rd St*** | NORTH | 66.4 | 14.5 | 25 | C | 66.4 | 14.5 | 20 | D | | | 17 | 40 | 21 | D | |
| | EAST | 31.7 | 20 | 12 | E | 31.7 | 20 | 6 | E | Yes | | | 40 | 6 | E | Yes |
| | SOUTH | 70.2 | 24 | 24 | C | 70.2 | 24 | 21 | D | | | | 40 | 19 | D | |
| | WEST | 32.5 | 24 | 10 | E | 32.5 | 24 | 9 | E | Yes | | | 40 | 10 | E | |
| ***Eighth Ave @ 34th St*** | NORTH | 66.8 | 20 | 21 | D | 66.8 | 20 | 19 | D | | | | 32 | 17 | D | |
| | EAST | 53.5 | 13 | 17 | D | 53.5 | 13 | 8 | E | Yes | | 20 | 32 | 12 | E | Yes |
| | SOUTH | 67.7 | 20 | 35 | C | 67.7 | 20 | 30 | C | | | | 32 | 27 | C | |
| | WEST | 54.3 | 13 | 11 | E | 54.3 | 13 | 10 | E | Yes | | 20 | 32 | 13 | E | |

# Appendix S.5.5

**Pedestrian Improvement Analysis - Crosswalk Level of Service**

**2025 Future Conditions (MD)**

| Intersection | Crosswalk Location | 2025 Future without the Proposed Action | | | | 2025 Future with the Proposed Action | | | | | 2025 Future with the Proposed Action (Improvement) | | | | | |
|---|---|---|---|---|---|---|---|---|---|---|---|---|---|---|---|---|
| | | Crosswalk length (Curb-to-Curb | Crosswalk width | Pedestrian Space (s.f./ped.) | Surge Level of Service | Crosswalk length (Curb-to-Curb | Crosswalk width | Pedestrian Space (s.f./ped.) | Surge Level of Service | Impact? | Proposed Crosswalk length | Proposed Crosswalk width | Signal Timing | Pedestrian Space (s.f./ped.) | Surge Level of Service | Still Impact? |
| ***Eighth Ave @ 37th St*** | NORTH | 70 | 11 | 31 | C | 70 | 11 | 26 | C | | | | | 26 | C | |
| | EAST | 36 | 13 | 17 | D | 36 | 13 | 14 | E | Yes | | 20 | | 21 | D | |
| | SOUTH | 70 | 11 | 28 | C | 70 | 11 | 23 | D | | | | | 23 | D | |
| | WEST | 35 | 13 | 12 | E | 35 | 13 | 11 | E | Yes | | 20 | | 17 | D | |
| ***Eighth Ave @ 38th St*** | NORTH | 70 | 12 | 256 | A | 70 | 12 | 153 | A | | | | | 153 | A | |
| | EAST | 36 | 15 | 33 | C | 36 | 15 | 27 | C | | | 20 | | 37 | C | |
| | SOUTH | 70 | 12 | 79 | B | 70 | 12 | 57 | B | | | | | 57 | B | |
| | WEST | 38 | 15 | 49 | B | 38 | 15 | 30 | C | | | 20 | | 40 | B | |
| ***Eighth Ave @ 39th St*** | NORTH | 70 | 10 | 42 | B | 70 | 10 | 37 | C | | | | | 37 | C | |
| | EAST | 36 | 13 | 12 | E | 36 | 13 | 11 | E | Yes | | 20 | | 17 | D | |
| | SOUTH | 70 | 10 | 11 | E | 70 | 10 | 11 | E | | | | | 11 | E | |
| | WEST | 36 | 13 | 10 | E | 36 | 13 | 8 | E | Yes | | 20 | | 13 | E | |
| ***Eighth Ave @ 42nd St*** | NORTH | 71 | 19 | 26 | C | 71 | 19 | 24 | C | | | 20 | | 25 | C | |
| | EAST | 55 | 26 | 22 | D | 55 | 26 | 21 | D | | | | | 21 | D | |
| | SOUTH | 69 | 19 | 17 | D | 69 | 19 | 15 | D | | | 20 | | 16 | D | |
| | WEST | 60 | 27 | 32 | C | 60 | 27 | 29 | C | | | | | 29 | C | |
| ***Seventh Ave @ 31st St*** | NORTH | 75 | 11 | 20 | D | 75 | 11 | 15 | D | | | 17 | | 24 | C | |
| | EAST | 34 | 17 | 16 | D | 34 | 17 | 13 | E | Yes | | 23 | | 18 | D | |
| | SOUTH | 60 | 11 | 32 | C | 60 | 11 | 24 | C | | | 17 | | 38 | C | |
| | WEST | 42 | 17 | 29 | C | 42 | 17 | 16 | D | | | 23 | | 21 | D | |
| ***Seventh Ave @ 33rd St*** | NORTH | 60 | 11 | 11 | E | 60 | 11 | 10 | E | Yes | | 17 | 24 | 15 | D | |
| | EAST | 34 | 17 | 18 | D | 34 | 17 | 16 | D | | | 20 | 56 | 18 | D | |
| | SOUTH | 70 | 11 | 9 | E | 70 | 11 | 8 | E | Yes | | 17 | 24 | 12 | E | |
| | WEST | 30 | 17 | 15 | D | 30 | 17 | 11 | E | Yes | | 20 | 56 | 12 | E | Yes |
| ***Seventh Ave @ 34th St*** | NORTH | 60 | 21 | 19 | D | 60 | 21 | 18 | D | | | | 39 | 19 | D | |
| | EAST | 54 | 18 | 28 | C | 54 | 18 | 23 | D | | | 20 | 40 | 24 | C | |
| | SOUTH | 60 | 21 | 32 | C | 60 | 21 | 29 | C | | | | 39 | 30 | C | |
| | WEST | 54 | 18 | 24 | C | 54 | 18 | 20 | D | | | 20 | 40 | 21 | D | |
| ***Sixth Ave @ 33rd St*** | NORTH | 120 | 15 | 28 | C | 120 | 15 | 27 | C | | | 17 | | 31 | C | |
| | EAST | 34 | 25 | 130 | A | 34 | 25 | 127 | B | | | | | 127 | B | |
| | SOUTH | 160 | 20 | 51 | B | 160 | 20 | 46 | B | | | | | 46 | B | |
| | WEST | 34 | 24 | 17 | D | 34 | 24 | 17 | D | | | | | 17 | D | |
| ***Sixth Ave @ 34th St*** | NORTH | 156 | 21 | 19 | D | 156 | 21 | 19 | D | | | | | 19 | D | |
| | EAST | 54 | 15 | 10 | E | 54 | 15 | 10 | E | | | 20 | | 14 | E | |
| | SOUTH | 116 | 21 | 15 | D | 116 | 21 | 15 | D | | | | | 15 | D | |
| | WEST | 0 | 0 | N/A | N/A | 0 | 0 | N/A | N/A | | | | | N/A | N/A | |
| ***Broadway @ 34th St*** | NORTH | 156 | 21 | 17 | D | 156 | 21 | 16 | D | | | | | 16 | D | |
| | EAST | 0 | 0 | N/A | N/A | 0 | 0 | N/A | N/A | | | | | N/A | N/A | |
| | SOUTH | 116 | 21 | 15 | D | 116 | 21 | 15 | D | | | | | 15 | D | |
| | WEST | 54 | 28 | 13 | E | 54 | 28 | 12 | E | Yes | | | | 12 | E | Yes |
| ***Blvd @ 33rd St*** | NORTH | 0 | 0 | N/A | N/A | 30 | 25 | 14 | E | | | | | 14 | E | |
| | EAST | 0 | 0 | N/A | N/A | 35 | 20 | 12 | E | | | | | 12 | E | |
| | SOUTH | 0 | 0 | N/A | N/A | 0 | 0 | N/A | N/A | | | | | N/A | N/A | |
| | WEST | 0 | 0 | N/A | N/A | 35 | 20 | 16 | D | | | | | 16 | D | |

# Appendix S.5.5

**Pedestrian Improvement Analysis - Crosswalk Level of Service**

**2025 Future Conditions (MD)**

| Intersection | Crosswalk Location | 2025 Future without the Proposed Action | | | | 2025 Future with the Proposed Action | | | | | 2025 Future with the Proposed Action (Improvement) | | | | | |
|---|---|---|---|---|---|---|---|---|---|---|---|---|---|---|---|---|
| | | Crosswalk length (Curb-to-Curb | Crosswalk width | Pedestrian Space (s.f./ped.) | Surge Level of Service | Crosswalk length (Curb-to-Curb | Crosswalk width | Pedestrian Space (s.f./ped.) | Surge Level of Service | Impact? | Proposed Crosswalk length | Proposed Crosswalk width | Signal Timing | Pedestrian Space (s.f./ped.) | Surge Level of Service | Still Impact? |
| ***Blvd @ 34th St*** | NORTH | 0 | 0 | N/A | N/A | 30 | 20 | 9 | E | | | | | 9 | E | |
| | EAST | 0 | 0 | N/A | N/A | 59 | 20 | 20 | D | | | | | 20 | D | |
| | SOUTH | 0 | 0 | N/A | N/A | 30 | 20 | 9 | E | | | | | 9 | E | |
| | WEST | 0 | 0 | N/A | N/A | 59 | 20 | 18 | D | | | | | 18 | D | |
| ***N.Blvd @ 35th St*** | NORTH | 0 | 0 | N/A | N/A | 30 | 20 | 10 | E | | | | | 10 | E | |
| | EAST | 0 | 0 | N/A | N/A | 34 | 20 | 11 | E | | | | | 11 | E | |
| | SOUTH | 0 | 0 | N/A | N/A | 30 | 20 | 12 | E | | | | | 12 | E | |
| | WEST | 0 | 0 | N/A | N/A | 0 | 0 | N/A | N/A | | | | | N/A | N/A | |
| ***N.Blvd @ 36th St*** | NORTH | 0 | 0 | N/A | N/A | 30 | 20 | 33 | C | | | | | 33 | C | |
| | EAST | 0 | 0 | N/A | N/A | 36 | 20 | 14 | E | | | | | 14 | E | |
| | SOUTH | 0 | 0 | N/A | N/A | 30 | 20 | 26 | C | | | | | 26 | C | |
| | WEST | 0 | 0 | N/A | N/A | 0 | 0 | N/A | N/A | | | | | N/A | N/A | |
| ***N.Blvd @ 37th St*** | NORTH | 0 | 0 | N/A | N/A | 30 | 20 | 12 | E | | | | | 12 | E | |
| | EAST | 0 | 0 | N/A | N/A | 36 | 20 | 19 | D | | | | | 19 | D | |
| | SOUTH | 0 | 0 | N/A | N/A | 30 | 20 | 48 | B | | | | | 48 | B | |
| | WEST | 0 | 0 | N/A | N/A | 0 | 0 | N/A | N/A | | | | | N/A | N/A | |
| ***Blvd @ 38th St*** | NORTH | 0 | 0 | N/A | N/A | 36 | 20 | 18 | D | | | | | 18 | D | |
| | EAST | 0 | 0 | N/A | N/A | 36 | 20 | 22 | D | | | | | 22 | D | |
| | SOUTH | 0 | 0 | N/A | N/A | 30 | 20 | 28 | C | | | | | 28 | C | |
| | WEST | 0 | 0 | N/A | N/A | 36 | 20 | 12 | E | | | | | 12 | E | |
| ***S.Blvd @ 35th St*** | NORTH | 0 | 0 | N/A | N/A | 30 | 20 | 9 | E | | | | | 9 | E | |
| | EAST | 0 | 0 | N/A | N/A | 0 | 0 | N/A | N/A | | | | | N/A | N/A | |
| | SOUTH | 0 | 0 | N/A | N/A | 0 | 0 | N/A | N/A | | | | | N/A | N/A | |
| | WEST | 0 | 0 | N/A | N/A | 37 | 20 | 9 | E | | | | | 9 | E | |
| ***S.Blvd @ 36th St*** | NORTH | 0 | 0 | N/A | N/A | 30 | 20 | 29 | C | | | | | 29 | C | |
| | EAST | 0 | 0 | N/A | N/A | 0 | 0 | N/A | N/A | | | | | N/A | N/A | |
| | SOUTH | 0 | 0 | N/A | N/A | 30 | 20 | 22 | D | | | | | 22 | D | |
| | WEST | 0 | 0 | N/A | N/A | 35 | 20 | 10 | E | | | | | 10 | E | |
| ***S.Blvd @ 37th St*** | NORTH | 0 | 0 | N/A | N/A | 30 | 20 | 12 | E | | | | | 12 | E | |
| | EAST | 0 | 0 | N/A | N/A | 0 | 0 | N/A | N/A | | | | | N/A | N/A | |
| | SOUTH | 0 | 0 | N/A | N/A | 30 | 20 | 48 | B | | | | | 48 | B | |
| | WEST | 0 | 0 | N/A | N/A | 36 | 20 | 11 | E | | | | | 11 | E | |

# Appendix S.5.5

**Pedestrian Improvement Analysis - Crosswalk Level of Service**

**2025 Future Conditions (PM)**

| Intersection | Crosswalk Location | 2025 Future without the Proposed Action | | | | 2025 Future with the Proposed Action | | | | | 2025 Future with the Proposed Action (Improvement) | | | | | |
|---|---|---|---|---|---|---|---|---|---|---|---|---|---|---|---|---|
| | | Crosswalk length (Curb-to-Curb | Crosswalk width | Pedestrian Space (s.f./ped.) | Surge Level of Service | Crosswalk length (Curb-to-Curb | Crosswalk width | Pedestrian Space (s.f./ped.) | Surge Level of Service | Impact? | Proposed Crosswalk length | Proposed Crosswalk width | Signal Timing | Pedestrian Space (s.f./ped.) | Surge Level of Service | Still Impact? |
| ***Twelfth Ave @ 30th St*** | NORTH | 0 | 0 | N/A | N/A | 0 | 0 | N/A | N/A | | | | | N/A | N/A | |
| | EAST | 33 | 19 | 2696 | A | 33 | 19 | 1348 | A | | | | 77 | 1323 | A | |
| | SOUTH | 141 | 15 | 4654 | A | 141 | 15 | 1995 | A | | | | | 1995 | A | |
| | WEST | 0 | 0 | N/A | N/A | 0 | 0 | N/A | N/A | | | | 77 | N/A | N/A | |
| ***Twelfth Ave @ 34th St*** | NORTH | 0 | 0 | N/A | N/A | 0 | 0 | N/A | N/A | | | | 35 | N/A | N/A | |
| | EAST | 60 | 14 | 1212 | A | 60 | 14 | 909 | A | | | 20 | 56 | 1120 | A | |
| | SOUTH | 120 | 15 | 151 | A | 120 | 15 | 144 | A | | | 17 | 35 | 172 | A | |
| | WEST | 0 | 0 | N/A | N/A | 0 | 0 | N/A | N/A | | | | 56 | N/A | N/A | |
| ***Twelfth Ave @ 39th St*** | NORTH | 0 | 0 | N/A | N/A | 131 | 20 | 129 | B | | | | | 129 | B | |
| | EAST | 49 | 11 | 1199 | A | 0 | 0 | N/A | N/A | | | | 68 | N/A | N/A | |
| | SOUTH | 131 | 15 | 241 | A | 0 | 0 | N/A | N/A | | | | | N/A | N/A | |
| | WEST | 0 | 0 | N/A | N/A | 0 | 0 | N/A | N/A | | | | 68 | N/A | N/A | |
| ***Twelfth Ave @ 40th St*** | NORTH | 0 | 0 | N/A | N/A | 0 | 0 | N/A | N/A | | | | | N/A | N/A | |
| | EAST | 38 | 14 | 3043 | A | 0 | 0 | N/A | N/A | | | | | N/A | N/A | |
| | SOUTH | 139 | 15 | 5049 | A | 0 | 0 | N/A | N/A | | | | | N/A | N/A | |
| | WEST | 0 | 0 | N/A | N/A | 0 | 0 | N/A | N/A | | | | | N/A | N/A | |
| ***Twelfth Ave @ 42nd St*** | NORTH | 140 | 15 | 142 | A | 140 | 15 | 141 | A | | | 17 | 31 | 157 | A | |
| | EAST | 70 | 15 | 463 | A | 70 | 15 | 501 | A | | | 20 | 59 | 660 | A | |
| | SOUTH | 140 | 15 | 181 | A | 140 | 15 | 181 | A | | | 17 | 31 | 202 | A | |
| | WEST | 0 | 0 | N/A | N/A | 0 | 0 | N/A | N/A | | | | 59 | N/A | N/A | |
| ***Eleventh Ave @ 29th St*** | NORTH | 70 | 11 | 5054 | A | 70 | 11 | 253 | A | | | 17 | | 411 | A | |
| | EAST | 34 | 13 | 149 | A | 34 | 13 | 42 | B | | | 20 | | 64 | B | |
| | SOUTH | 70 | 11 | 2527 | A | 70 | 11 | 2527 | A | | | 17 | | 3906 | A | |
| | WEST | 34 | 13 | 313 | A | 34 | 13 | 71 | B | | | 20 | | 109 | B | |
| ***Eleventh Ave @ 30th St*** | NORTH | 70 | 11 | 778 | A | 70 | 11 | 123 | B | | | 17 | | 191 | A | |
| | EAST | 34 | 13 | 243 | A | 34 | 13 | 34 | C | | | 20 | | 53 | B | |
| | SOUTH | 70 | 11 | 5054 | A | 70 | 11 | 225 | A | | | 17 | | 347 | A | |
| | WEST | 34 | 13 | 346 | A | 34 | 13 | 45 | B | | | 20 | | 69 | B | |
| ***Eleventh Ave @ 33rd St*** | NORTH | 70 | 11 | 4147 | A | 70 | 11 | 106 | B | | | 17 | 27 | 168 | A | |
| | EAST | 34 | 13 | 273 | A | 34 | 13 | 36 | C | | | 20 | 53 | 53 | B | |
| | SOUTH | 70 | 11 | 4147 | A | 70 | 11 | 93 | B | | | 17 | 27 | 148 | A | |
| | WEST | 36 | 13 | 1526 | A | 0 | 0 | N/A | N/A | | | | 53 | N/A | N/A | |
| ***Eleventh Ave @ 34th St*** | NORTH | 73 | 18 | 224 | A | 73 | 18 | 68 | B | | | 20 | 21 | 73 | B | |
| | EAST | 59 | 12 | 254 | A | 59 | 12 | 42 | B | | | 20 | 38 | 52 | B | |
| | SOUTH | 71 | 18 | 256 | A | 71 | 18 | 47 | B | | | 20 | 21 | 51 | B | |
| | WEST | 60 | 13 | 317 | A | 60 | 13 | 49 | B | | | 20 | 38 | 55 | B | |
| ***Eleventh Ave @ 35th St*** | NORTH | 87 | 10 | 3608 | A | 87 | 10 | 318 | A | | | 17 | 45 | 581 | A | |
| | EAST | 37 | 11 | 181 | A | 37 | 11 | 25 | C | | | 20 | 35 | 43 | B | |
| | SOUTH | 87 | 11 | 11907 | A | 87 | 11 | 111 | B | | | 17 | 45 | 185 | A | |
| | WEST | 0 | 0 | N/A | N/A | 0 | 0 | N/A | N/A | | | | 35 | N/A | N/A | |
| ***Eleventh Ave @ 36th St*** | NORTH | 86 | 11 | 4724 | A | 86 | 11 | 337 | A | | | 17 | | 521 | A | |
| | EAST | 35 | 10 | 129 | B | 35 | 10 | 11 | E | Yes | | 20 | | 23 | D | |
| | SOUTH | 87 | 11 | 1907 | A | 87 | 11 | 76 | B | | | 17 | | 118 | B | |
| | WEST | 0 | 0 | N/A | N/A | 0 | 0 | N/A | N/A | | | | | N/A | N/A | |

# Appendix S.5.5

**Pedestrian Improvement Analysis - Crosswalk Level of Service**

**2025 Future Conditions (PM)**

| Intersection | Crosswalk Location | 2025 Future without the Proposed Action | | | | 2025 Future with the Proposed Action | | | | | 2025 Future with the Proposed Action (Improvement) | | | | | |
|---|---|---|---|---|---|---|---|---|---|---|---|---|---|---|---|---|
| | | Crosswalk length (Curb-to-Curb | Crosswalk width | Pedestrian Space (s.f./ped.) | Surge Level of Service | Crosswalk length (Curb-to-Curb | Crosswalk width | Pedestrian Space (s.f./ped.) | Surge Level of Service | Impact? | Proposed Crosswalk length | Proposed Crosswalk width | Signal Timing | Pedestrian Space (s.f./ped.) | Surge Level of Service | Still Impact? |
| ***Eleventh Ave @ 37th St*** | NORTH | 75 | 10 | 2567 | A | 75 | 10 | 157 | A | | | 17 | 47 | 374 | A | |
| | EAST | 36 | 8 | 241 | A | 36 | 8 | 18 | D | | | 20 | 33 | 28 | C | |
| | SOUTH | 75 | 10 | 3850 | A | 75 | 10 | 385 | A | | | 17 | 47 | 916 | A | |
| | WEST | 0 | 0 | N/A | N/A | 0 | 0 | N/A | N/A | | | | 33 | N/A | N/A | |
| ***Eleventh Ave @ 38th St*** | NORTH | 75 | 9 | 3465 | A | 75 | 9 | 301 | A | | | 17 | | 569 | A | |
| | EAST | 38 | 8 | 1722 | A | 38 | 8 | 13 | E | Yes | | 20 | | 32 | C | |
| | SOUTH | 75 | 9 | 770 | A | 75 | 9 | 192 | A | | | 17 | | 364 | A | |
| | WEST | 0 | 0 | N/A | N/A | 0 | 0 | N/A | N/A | | | | | N/A | N/A | |
| ***Eleventh Ave @ 39th St*** | NORTH | 73 | 10 | 4200 | A | 73 | 10 | 525 | A | | | 17 | | 892 | A | |
| | EAST | 33 | 11 | 2121 | A | 33 | 11 | 19 | D | | | 20 | | 35 | C | |
| | SOUTH | 76 | 12 | 204 | A | 76 | 12 | 108 | B | | | 17 | | 154 | A | |
| | WEST | 36 | 13 | 2025 | A | 0 | 0 | N/A | N/A | | | | | N/A | N/A | |
| ***Eleventh Ave @ 40th St*** | NORTH | 75 | 11 | 4235 | A | 75 | 11 | 58 | B | | | | | 58 | B | |
| | EAST | 60 | 10 | 5586 | A | 60 | 10 | 20 | D | | | | | 20 | D | |
| | SOUTH | 75 | 11 | 423 | A | 75 | 11 | 385 | A | | | | | 385 | A | |
| | WEST | 36 | 13 | 516 | A | 0 | 0 | N/A | N/A | | | | | N/A | N/A | |
| ***Eleventh Ave @ 42nd St*** | NORTH | 70 | 15 | 55 | B | 70 | 15 | 40 | B | | | 17 | 35 | 47 | B | |
| | EAST | 69 | 13 | 256 | A | 69 | 13 | 53 | B | | | 20 | 31 | 77 | B | |
| | SOUTH | 71 | 15 | 78 | B | 71 | 15 | 25 | C | | | 17 | 35 | 29 | C | |
| | WEST | 68 | 14 | 145 | A | 68 | 14 | 57 | B | | | 20 | 31 | 77 | B | |
| ***Tenth Ave @ 29th St*** | NORTH | 70 | 11 | 158 | A | 70 | 11 | 118 | B | | | 17 | | 182 | A | |
| | EAST | 34 | 13 | 143 | A | 34 | 13 | 63 | B | | | 20 | | 97 | B | |
| | SOUTH | 70 | 11 | 106 | B | 70 | 11 | 90 | B | | | 17 | | 139 | A | |
| | WEST | 34 | 13 | 67 | B | 34 | 13 | 25 | C | | | 20 | | 38 | C | |
| ***Tenth Ave @ 30th St*** | NORTH | 71 | 14 | 172 | A | 71 | 14 | 54 | B | | | 17 | 32 | 67 | B | |
| | EAST | 35 | 16 | 191 | A | 35 | 16 | 63 | B | | | 20 | 48 | 76 | B | |
| | SOUTH | 74 | 13 | 253 | A | 74 | 13 | 121 | B | | | 17 | 32 | 162 | A | |
| | WEST | 35 | 18 | 106 | B | 35 | 18 | 29 | C | | | 20 | 48 | 31 | C | |
| ***Tenth Ave @ 31st St*** | NORTH | 70 | 13 | 695 | A | 70 | 13 | 19 | D | | | 17 | 43 | 29 | C | |
| | EAST | 34 | 12 | 101 | B | 34 | 12 | 33 | C | | | 20 | 37 | 44 | B | |
| | SOUTH | 70 | 11 | 2941 | A | 70 | 11 | 88 | B | | | 17 | 43 | 163 | A | |
| | WEST | 0 | 0 | N/A | N/A | 0 | 0 | N/A | N/A | | | | 37 | N/A | N/A | |
| ***Tenth Ave @ 33rd St*** | NORTH | 69 | 12 | 203 | A | 69 | 12 | 8 | E | Yes | | 17 | 34 | 12 | E | Yes |
| | EAST | 32 | 14 | 127 | B | 32 | 14 | 11 | E | Yes | | 20 | 46 | 15 | D | |
| | SOUTH | 71 | 11 | 86 | B | 71 | 11 | 5 | F | Yes | | 17 | 34 | 8 | E | Yes |
| | WEST | 35 | 13 | 112 | B | 35 | 13 | 8 | E | Yes | | 20 | 46 | 12 | E | Yes |
| ***Tenth Ave @ 34th St*** | NORTH | 69 | 18 | 106 | B | 69 | 18 | 16 | D | | | | 42 | 19 | D | |
| | EAST | 59 | 13 | 209 | A | 59 | 13 | 20 | D | | | 20 | 38 | 25 | C | |
| | SOUTH | 68 | 18 | 106 | B | 68 | 18 | 10 | E | Yes | | | 42 | 12 | E | Yes |
| | WEST | 59 | 13 | 205 | A | 59 | 13 | 15 | D | | | 20 | 38 | 20 | D | |

# Appendix S.5.5

**Pedestrian Improvement Analysis - Crosswalk Level of Service**

**2025 Future Conditions (PM)**

| Intersection | Crosswalk Location | 2025 Future without the Proposed Action | | | | 2025 Future with the Proposed Action | | | | | 2025 Future with the Proposed Action (Improvement) | | | | | |
|---|---|---|---|---|---|---|---|---|---|---|---|---|---|---|---|---|
| | | Crosswalk length (Curb-to-Curb | Crosswalk width | Pedestrian Space (s.f./ped.) | Surge Level of Service | Crosswalk length (Curb-to-Curb | Crosswalk width | Pedestrian Space (s.f./ped.) | Surge Level of Service | Impact? | Proposed Crosswalk length | Proposed Crosswalk width | Signal Timing | Pedestrian Space (s.f./ped.) | Surge Level of Service | Still Impact? |
| ***Tenth Ave @ 35th St*** | NORTH | 71 | 11 | 142 | A | 71 | 11 | 19 | D | | | 17 | | 29 | C | |
| | EAST | 34 | 12 | 151 | A | 34 | 12 | 21 | D | | | 20 | | 35 | C | |
| | SOUTH | 71 | 0 | N/A | N/A | 71 | 12 | 20 | D | | | 17 | | 29 | C | |
| | WEST | 34 | 12 | 121 | B | 34 | 12 | 12 | E | Yes | | 20 | | 20 | D | |
| ***Tenth Ave @ 36th St*** | NORTH | 70 | 10 | 251 | A | 70 | 10 | 26 | C | | | 17 | | 45 | B | |
| | EAST | 37 | 12 | 170 | A | 37 | 12 | 27 | C | | | 20 | | 46 | B | |
| | SOUTH | 70 | 11 | 95 | B | 70 | 11 | 32 | C | | | 17 | | 49 | B | |
| | WEST | 36 | 12 | 107 | B | 36 | 12 | 18 | D | | | 20 | | 30 | C | |
| ***Tenth Ave @ 37th St*** | NORTH | 70 | 10 | 257 | A | 70 | 10 | 26 | C | | | 17 | 35 | 46 | B | |
| | EAST | 36 | 13 | 306 | A | 36 | 13 | 33 | C | | | 20 | 45 | 48 | B | |
| | SOUTH | 70 | 10 | 358 | A | 70 | 10 | 22 | D | | | 17 | 35 | 38 | C | |
| | WEST | 36 | 13 | 378 | A | 36 | 13 | 25 | C | | | 20 | 45 | 36 | C | |
| ***Tenth Ave @ 38th St*** | NORTH | 70 | 10 | 472 | A | 70 | 10 | 31 | C | | | 17 | | 52 | B | |
| | EAST | 36 | 13 | 266 | A | 36 | 13 | 31 | C | | | 20 | | 48 | B | |
| | SOUTH | 70 | 10 | 422 | A | 70 | 10 | 36 | C | | | 17 | | 61 | B | |
| | WEST | 36 | 13 | 330 | A | 36 | 13 | 23 | D | | | 20 | | 36 | C | |
| ***Tenth Ave @ 39th St*** | NORTH | 70 | 13 | 359 | A | 70 | 13 | 51 | B | | | 17 | 33 | 65 | B | |
| | EAST | 36 | 10 | 175 | A | 36 | 10 | 15 | D | | | 20 | 47 | 31 | C | |
| | SOUTH | 70 | 13 | 247 | A | 70 | 13 | 38 | C | | | 17 | 33 | 49 | B | |
| | WEST | 50 | 11 | 270 | A | 50 | 11 | 21 | D | | | 20 | 47 | 40 | B | |
| ***Tenth Ave @ 40th St*** | NORTH | 70 | 11 | 475 | A | 70 | 11 | 52 | B | | | 17 | 31 | 75 | B | |
| | EAST | 40 | 13 | 232 | A | 40 | 13 | 16 | D | | | 20 | 49 | 27 | C | |
| | SOUTH | 75 | 10 | 1526 | A | 75 | 10 | 218 | A | | | 17 | 31 | 347 | A | |
| | WEST | 33 | 13 | 212 | A | 33 | 13 | 15 | D | | | 20 | 49 | 26 | C | |
| ***Tenth Ave @ 41st St*** | NORTH | 69 | 13.8 | 171 | A | 69 | 13.8 | 92 | B | | | 17 | 35 | 98 | B | |
| | EAST | 61 | 13.1 | 167 | A | 61 | 13.1 | 27 | C | | | 20 | 45 | 48 | B | |
| | SOUTH | 70 | 13.5 | 739 | A | 70 | 13.5 | 22 | D | | | 17 | 35 | 24 | C | |
| | WEST | 30 | 11.1 | 129 | B | 30 | 11.1 | 16 | D | | | 20 | 45 | 34 | C | |
| ***Tenth Ave @ 42nd St*** | NORTH | 59 | 17.3 | 34 | C | 59 | 17.3 | 28 | C | | | | | 28 | C | |
| | EAST | 59 | 14.5 | 157 | A | 59 | 14.5 | 51 | B | | | 20 | | 70 | B | |
| | SOUTH | 68 | 13.8 | 53 | B | 68 | 13.8 | 15 | D | | | 17 | | 18 | D | |
| | WEST | 68 | 15 | 273 | A | 68 | 15 | 76 | B | | | 20 | | 101 | B | |
| ***Dyer @ 42nd St*** | NORTH | 0 | 0 | N/A | N/A | 0 | 0 | N/A | N/A | | | | | N/A | N/A | |
| | EAST | 36 | 13.6 | 668 | A | 36 | 13.6 | 668 | A | | | | | 668 | A | |
| | SOUTH | 40 | 14 | 46 | B | 40 | 14 | 49 | B | | | | | 49 | B | |
| | WEST | 36 | 12 | 337 | A | 36 | 12 | 337 | A | | | | | 337 | A | |
| ***Ninth Ave @ 30th St*** | NORTH | 69 | 11.7 | 144 | A | 69 | 11.7 | 69 | B | | | 17 | | 100 | B | |
| | EAST | 36 | 14.3 | 43 | B | 36 | 14.3 | 28 | C | | | 20 | | 39 | C | |
| | SOUTH | 63 | 15.1 | 149 | A | 63 | 15.1 | 103 | B | | | 17 | | 116 | B | |
| | WEST | 98 | 14.5 | 148 | A | 98 | 14.5 | 88 | B | | | 20 | | 122 | B | |

# Appendix S.5.5

**Pedestrian Improvement Analysis - Crosswalk Level of Service**

**2025 Future Conditions (PM)**

| Intersection | Crosswalk Location | 2025 Future without the Proposed Action | | | | 2025 Future with the Proposed Action | | | | | 2025 Future with the Proposed Action (Improvement) | | | | | |
|---|---|---|---|---|---|---|---|---|---|---|---|---|---|---|---|---|
| | | Crosswalk length (Curb-to-Curb | Crosswalk width | Pedestrian Space (s.f./ped.) | Surge Level of Service | Crosswalk length (Curb-to-Curb | Crosswalk width | Pedestrian Space (s.f./ped.) | Surge Level of Service | Impact? | Proposed Crosswalk length | Proposed Crosswalk width | Signal Timing | Pedestrian Space (s.f./ped.) | Surge Level of Service | Still Impact? |
| ***Ninth Ave @ 31st St*** | NORTH | 73 | 24 | 82 | B | 73 | 24 | 38 | C | | | | 35 | 41 | B | |
| | EAST | 32 | 24 | 66 | B | 32 | 24 | 50 | B | | | | 45 | 46 | B | |
| | SOUTH | 67 | 14 | 125 | B | 67 | 14 | 59 | B | | | 17 | 35 | 76 | B | |
| | WEST | 36 | 13 | 94 | B | 36 | 13 | 48 | B | | | 20 | 45 | 67 | B | |
| ***Ninth Ave @ 33rd St*** | NORTH | 68 | 12.5 | 62 | B | 68 | 12.5 | 16 | D | | | 17 | 35 | 23 | D | |
| | EAST | 35 | 24 | 31 | C | 35 | 24 | 16 | D | | | | 45 | 15 | D | |
| | SOUTH | 68 | 24 | 27 | C | 68 | 24 | 12 | E | Yes | | | 35 | 13 | E | Yes |
| | WEST | 33 | 13.5 | 27 | C | 33 | 13.5 | 10 | E | Yes | | 20 | 45 | 14 | E | Yes |
| ***Ninth Ave @ 34th St*** | NORTH | 69 | 20 | 28 | C | 69 | 20 | 15 | D | | | | 39 | 17 | D | |
| | EAST | 52 | 15 | 23 | D | 52 | 15 | 15 | D | | | 20 | 24 | 17 | D | |
| | SOUTH | 67 | 20 | 42 | B | 67 | 20 | 17 | D | | | | 39 | 19 | D | |
| | WEST | 61 | 15 | 37 | C | 61 | 15 | 20 | D | | | 20 | 24 | 24 | C | |
| ***Ninth Ave @ 37th St*** | NORTH | 70 | 10 | 72 | B | 70 | 10 | 30 | C | | | | | 30 | C | |
| | EAST | 36 | 13 | 26 | C | 36 | 13 | 18 | D | | | 20 | | 28 | C | |
| | SOUTH | 70 | 10 | 110 | B | 70 | 10 | 40 | B | | | | | 40 | B | |
| | WEST | 36 | 13 | 28 | C | 36 | 13 | 19 | D | | | 20 | | 30 | C | |
| ***Ninth Ave @ 38th St*** | NORTH | 70 | 9 | 144 | A | 70 | 9 | 43 | B | | | | | 43 | B | |
| | EAST | 37 | 13 | 44 | B | 37 | 13 | 22 | D | | | 20 | | 35 | C | |
| | SOUTH | 70 | 9 | 168 | A | 70 | 9 | 40 | B | | | | | 40 | B | |
| | WEST | 37 | 13 | 99 | B | 37 | 13 | 48 | B | | | | | 48 | B | |
| ***Ninth Ave @ 39th St*** | NORTH | 70 | 10 | 85 | B | 70 | 10 | 53 | B | | | | | 53 | B | |
| | EAST | 36 | 13 | 25 | C | 36 | 13 | 15 | D | | | 20 | | 24 | C | |
| | SOUTH | 70 | 10 | 86 | B | 70 | 10 | 42 | B | | | | | 42 | B | |
| | WEST | 36 | 13 | 61 | B | 36 | 13 | 39 | C | | | | | 39 | C | |
| ***Ninth Ave @ 42nd St*** | NORTH | 69 | 14.7 | 20 | D | 69 | 14.7 | 17 | D | | | 17 | 31 | 20 | D | |
| | EAST | 61 | 13.8 | 24 | C | 61 | 13.8 | 19 | D | | | 20 | 34 | 27 | C | |
| | SOUTH | 71 | 10 | 20 | D | 71 | 10 | 13 | E | Yes | | 17 | 31 | 23 | D | |
| | WEST | 59 | 12.5 | 23 | D | 59 | 12.5 | 19 | D | | | 20 | 34 | 30 | C | |
| ***Eighth Ave @ 30th St*** | NORTH | 69 | 12 | 131 | A | 69 | 12 | 91 | B | | | | 42 | 96 | B | |
| | EAST | 31 | 12.6 | 18 | D | 31 | 12.6 | 11 | E | Yes | | 20 | 38 | 17 | D | |
| | SOUTH | 70 | 11.5 | 156 | A | 70 | 11.5 | 108 | B | | | | 42 | 115 | B | |
| | WEST | 33 | 12.5 | 25 | C | 33 | 12.5 | 18 | D | | | 20 | 38 | 27 | C | |
| ***Eighth Ave @ 31st St*** | NORTH | 70 | 24 | 47 | B | 70 | 24 | 41 | B | | | | 38 | 39 | C | |
| | EAST | 42 | 14.5 | 31 | C | 42 | 14.5 | 13 | E | Yes | | 20 | 42 | 19 | D | |
| | SOUTH | 70 | 14.5 | 85 | B | 70 | 14.5 | 52 | B | | | | 38 | 50 | B | |
| | WEST | 34 | 24 | 42 | B | 34 | 24 | 34 | C | | | | 42 | 36 | C | |
| ***Eighth Ave @ 33rd St*** | NORTH | 66 | 14.5 | 17 | D | 66 | 14.5 | 13 | E | Yes | | 17 | 40 | 14 | E | Yes |
| | EAST | 32 | 20 | 10 | E | 32 | 20 | 5 | F | Yes | | | 40 | 6 | E | Yes |
| | SOUTH | 70 | 24 | 25 | C | 70 | 24 | 21 | D | | | | 40 | 19 | D | |
| | WEST | 33 | 24 | 9 | E | 33 | 24 | 8 | E | Yes | | | 40 | 9 | E | |
| ***Eighth Ave @ 34th St*** | NORTH | 67 | 20 | 22 | D | 67 | 20 | 15 | D | | | | 29 | 13 | E | Yes |
| | EAST | 54 | 13 | 15 | D | 54 | 13 | 8 | E | Yes | | 20 | 35 | 12 | E | Yes |
| | SOUTH | 68 | 20 | 38 | C | 68 | 20 | 25 | C | | | | 29 | 22 | D | |
| | WEST | 54 | 13 | 10 | E | 54 | 13 | 9 | E | Yes | | 20 | 35 | 13 | E | |

# Appendix S.5.5

**Pedestrian Improvement Analysis - Crosswalk Level of Service**

**2025 Future Conditions (PM)**

| Intersection | Crosswalk Location | 2025 Future without the Proposed Action | | | | 2025 Future with the Proposed Action | | | | | 2025 Future with the Proposed Action (Improvement) | | | | | |
|---|---|---|---|---|---|---|---|---|---|---|---|---|---|---|---|---|
| | | Crosswalk length (Curb-to-Curb | Crosswalk width | Pedestrian Space (s.f./ped.) | Surge Level of Service | Crosswalk length (Curb-to-Curb | Crosswalk width | Pedestrian Space (s.f./ped.) | Surge Level of Service | Impact? | Proposed Crosswalk length | Proposed Crosswalk width | Signal Timing | Pedestrian Space (s.f./ped.) | Surge Level of Service | Still Impact? |
| ***Eighth Ave @ 37th St*** | NORTH | 70 | 11 | 72 | B | 70 | 11 | 54 | B | | | | | 54 | B | |
| | EAST | 36 | 13 | 12 | E | 36 | 13 | 10 | E | Yes | | 20 | | 16 | D | |
| | SOUTH | 70 | 11 | 55 | B | 70 | 11 | 36 | C | | | | | 36 | C | |
| | WEST | 35 | 13 | 9 | E | 35 | 13 | 8 | E | Yes | | 20 | | 12 | E | |
| ***Eighth Ave @ 38th St*** | NORTH | 70 | 12 | 564 | A | 70 | 12 | 151 | A | | | | | 151 | A | |
| | EAST | 36 | 15 | 147 | A | 36 | 15 | 63 | B | | | 20 | | 84 | B | |
| | SOUTH | 70 | 12 | 134 | A | 70 | 12 | 69 | B | | | | | 69 | B | |
| | WEST | 38 | 15 | 46 | B | 38 | 15 | 27 | C | | | 20 | | 36 | C | |
| ***Eighth Ave @ 39th St*** | NORTH | 70 | 10 | 60 | B | 70 | 10 | 54 | B | | | | | 54 | B | |
| | EAST | 36 | 13 | 8 | E | 36 | 13 | 7 | E | Yes | | 20 | | 12 | E | |
| | SOUTH | 70 | 10 | 39 | C | 70 | 10 | 32 | C | | | | | 32 | C | |
| | WEST | 36 | 13 | 5 | F | 36 | 13 | 4 | F | Yes | | 20 | | 7 | E | |
| ***Eighth Ave @ 42nd St*** | NORTH | 71 | 19 | 17 | D | 71 | 19 | 16 | D | | | 20 | 30 | 18 | D | |
| | EAST | 55 | 26 | 14 | E | 55 | 26 | 14 | E | | | | 38 | 14 | E | |
| | SOUTH | 69 | 19 | 9 | E | 69 | 19 | 8 | E | Yes | | 20 | 30 | 9 | E | |
| | WEST | 60 | 27 | 13 | E | 60 | 27 | 13 | E | | | | 38 | 13 | E | |
| ***Seventh Ave @ 31st St*** | NORTH | 75 | 11 | 12 | E | 75 | 11 | 10 | E | Yes | | 17 | 42 | 16 | D | |
| | EAST | 34 | 17 | 15 | D | 34 | 17 | 14 | E | Yes | | 23 | 38 | 18 | D | |
| | SOUTH | 60 | 11 | 14 | E | 60 | 11 | 13 | E | Yes | | 17 | 42 | 21 | D | |
| | WEST | 42 | 17 | 16 | D | 42 | 17 | 14 | E | Yes | | 23 | 38 | 18 | D | |
| ***Seventh Ave @ 33rd St*** | NORTH | 60 | 11 | 8 | E | 60 | 11 | 7 | E | Yes | | 17 | 25 | 11 | E | |
| | EAST | 34 | 17 | 17 | D | 34 | 17 | 16 | D | | | 20 | 55 | 18 | D | |
| | SOUTH | 70 | 11 | 8 | E | 70 | 11 | 7 | E | Yes | | 17 | 25 | 11 | E | |
| | WEST | 30 | 17 | 13 | E | 30 | 17 | 11 | E | Yes | | 20 | 55 | 12 | E | Yes |
| ***Seventh Ave @ 34th St*** | NORTH | 60 | 21 | 58 | B | 60 | 21 | 48 | B | | | | 38 | 50 | B | |
| | EAST | 54 | 18 | 67 | B | 54 | 18 | 59 | B | | | 20 | 41 | 63 | B | |
| | SOUTH | 60 | 21 | 50 | B | 60 | 21 | 38 | C | | | | 38 | 40 | B | |
| | WEST | 54 | 18 | 56 | B | 54 | 18 | 44 | B | | | 20 | 41 | 46 | B | |
| ***Sixth Ave @ 33rd St*** | NORTH | 120 | 15 | 21 | D | 120 | 15 | 19 | D | | | 17 | | 22 | D | |
| | EAST | 34 | 25 | 89 | B | 34 | 25 | 84 | B | | | | | 84 | B | |
| | SOUTH | 160 | 20 | 24 | C | 160 | 20 | 20 | D | | | | | 20 | D | |
| | WEST | 34 | 24 | 15 | D | 34 | 24 | 15 | D | | | | | 15 | D | |
| ***Sixth Ave @ 34th St*** | NORTH | 156 | 21 | 20 | D | 156 | 21 | 19 | D | | | | | 19 | D | |
| | EAST | 54 | 15 | 13 | E | 54 | 15 | 12 | E | Yes | | 20 | | 16 | D | |
| | SOUTH | 116 | 21 | 16 | D | 116 | 21 | 16 | D | | | | | 16 | D | |
| | WEST | 0 | 0 | N/A | N/A | 0 | 0 | N/A | N/A | | | | | N/A | N/A | |
| ***Broadway @ 34th St*** | NORTH | 156 | 21 | 17 | D | 156 | 21 | 17 | D | | | | | 17 | D | |
| | EAST | 0 | 0 | N/A | N/A | 0 | 0 | N/A | N/A | | | | | N/A | N/A | |
| | SOUTH | 116 | 21 | 16 | D | 116 | 21 | 16 | D | | | | | 16 | D | |
| | WEST | 54 | 28 | 14 | E | 54 | 28 | 13 | E | Yes | | | | 13 | E | Yes |
| ***Blvd @ 33rd St*** | NORTH | 0 | 0 | N/A | N/A | 30 | 25 | 8 | E | | | | 45 | 10 | E | |
| | EAST | 0 | 0 | N/A | N/A | 35 | 20 | 19 | D | | | | 45 | 18 | D | |
| | SOUTH | 0 | 0 | N/A | N/A | 0 | 0 | N/A | N/A | | | | | N/A | N/A | |
| | WEST | 0 | 0 | N/A | N/A | 35 | 20 | 8 | E | | | | 45 | 8 | E | |

# Appendix S.5.5

**Pedestrian Improvement Analysis - Crosswalk Level of Service**

**2025 Future Conditions (PM)**

| Intersection | Crosswalk Location | 2025 Future without the Proposed Action | | | | 2025 Future with the Proposed Action | | | | | 2025 Future with the Proposed Action (Improvement) | | | | | |
|---|---|---|---|---|---|---|---|---|---|---|---|---|---|---|---|---|
| | | Crosswalk length (Curb-to-Curb | Crosswalk width | Pedestrian Space (s.f./ped.) | Surge Level of Service | Crosswalk length (Curb-to-Curb | Crosswalk width | Pedestrian Space (s.f./ped.) | Surge Level of Service | Impact? | Proposed Crosswalk length | Proposed Crosswalk width | Signal Timing | Pedestrian Space (s.f./ped.) | Surge Level of Service | Still Impact? |
| ***Blvd @ 34th St*** | NORTH | 0 | 0 | N/A | N/A | 30 | 20 | 11 | E | | | | | 11 | E | |
| | EAST | 0 | 0 | N/A | N/A | 59 | 20 | 41 | B | | | | | 41 | B | |
| | SOUTH | 0 | 0 | N/A | N/A | 30 | 20 | 9 | E | | | | | 9 | E | |
| | WEST | 0 | 0 | N/A | N/A | 59 | 20 | 36 | C | | | | | 36 | C | |
| ***N.Blvd @ 35th St*** | NORTH | 0 | 0 | N/A | N/A | 30 | 20 | 16 | D | | | | | 16 | D | |
| | EAST | 0 | 0 | N/A | N/A | 34 | 20 | 16 | D | | | | | 16 | D | |
| | SOUTH | 0 | 0 | N/A | N/A | 30 | 20 | 11 | E | | | | | 11 | E | |
| | WEST | 0 | 0 | N/A | N/A | 0 | 0 | N/A | N/A | | | | | N/A | N/A | |
| ***N.Blvd @ 36th St*** | NORTH | 0 | 0 | N/A | N/A | 30 | 20 | 47 | B | | | | | 47 | B | |
| | EAST | 0 | 0 | N/A | N/A | 36 | 20 | 32 | C | | | | | 32 | C | |
| | SOUTH | 0 | 0 | N/A | N/A | 30 | 20 | 36 | C | | | | | 36 | C | |
| | WEST | 0 | 0 | N/A | N/A | 0 | 0 | N/A | N/A | | | | | N/A | N/A | |
| ***N.Blvd @ 37th St*** | NORTH | 0 | 0 | N/A | N/A | 30 | 20 | 36 | C | | | | | 36 | C | |
| | EAST | 0 | 0 | N/A | N/A | 36 | 20 | 36 | C | | | | | 36 | C | |
| | SOUTH | 0 | 0 | N/A | N/A | 30 | 20 | 50 | B | | | | | 50 | B | |
| | WEST | 0 | 0 | N/A | N/A | 0 | 0 | N/A | N/A | | | | | N/A | N/A | |
| ***Blvd @ 38th St*** | NORTH | 0 | 0 | N/A | N/A | 36 | 20 | 52 | B | | | | | 52 | B | |
| | EAST | 0 | 0 | N/A | N/A | 36 | 20 | 35 | C | | | | | 35 | C | |
| | SOUTH | 0 | 0 | N/A | N/A | 30 | 20 | 32 | C | | | | | 32 | C | |
| | WEST | 0 | 0 | N/A | N/A | 36 | 20 | 11 | E | | | | | 11 | E | |
| ***S.Blvd @ 35th St*** | NORTH | 0 | 0 | N/A | N/A | 30 | 20 | 13 | E | | | | | 13 | E | |
| | EAST | 0 | 0 | N/A | N/A | 0 | 0 | N/A | N/A | | | | | N/A | N/A | |
| | SOUTH | 0 | 0 | N/A | N/A | 0 | 0 | N/A | N/A | | | | | N/A | N/A | |
| | WEST | 0 | 0 | N/A | N/A | 37 | 20 | 13 | E | | | | | 13 | E | |
| ***S.Blvd @ 36th St*** | NORTH | 0 | 0 | N/A | N/A | 30 | 20 | 41 | B | | | | | 41 | B | |
| | EAST | 0 | 0 | N/A | N/A | 0 | 0 | N/A | N/A | | | | | N/A | N/A | |
| | SOUTH | 0 | 0 | N/A | N/A | 30 | 20 | 31 | C | | | | | 31 | C | |
| | WEST | 0 | 0 | N/A | N/A | 35 | 20 | 29 | C | | | | | 29 | C | |
| ***S.Blvd @ 37th St*** | NORTH | 0 | 0 | N/A | N/A | 30 | 20 | 36 | C | | | | | 36 | C | |
| | EAST | 0 | 0 | N/A | N/A | 0 | 0 | N/A | N/A | | | | | N/A | N/A | |
| | SOUTH | 0 | 0 | N/A | N/A | 30 | 20 | 50 | B | | | | | 50 | B | |
| | WEST | 0 | 0 | N/A | N/A | 36 | 20 | 16 | D | | | | | 16 | D | |

# Appendix S.5.5

**Pedestrian Improvement Analysis - Crosswalk Level of Service**

**2025 Future Conditions (EVE)**

| Intersection | Crosswalk Location | 2025 Future without the Proposed Action | | | | 2025 Future with the Proposed Action | | | | | 2025 Future with the Proposed Action (Improvement) | | | | | |
|---|---|---|---|---|---|---|---|---|---|---|---|---|---|---|---|---|
| | | Crosswalk length (Curb-to-Curb | Crosswalk width | Pedestrian Space (s.f./ped.) | Surge Level of Service | Crosswalk length (Curb-to-Curb | Crosswalk width | Pedestrian Space (s.f./ped.) | Surge Level of Service | Impact? | Proposed Crosswalk length | Proposed Crosswalk width | Traffic Signal Timing Improvement | Pedestrian Space (s.f./ped.) | Surge Level of Service | Still Impact? |
| ***Twelfth Ave @ 30th St*** | NORTH | 0 | 0 | N/A | N/A | 0 | 0 | N/A | N/A | | | | | N/A | N/A | |
| | EAST | 33 | 19 | 3118 | A | 33 | 19 | 3118 | A | | | | | 3118 | A | |
| | SOUTH | 110 | 15 | 6015 | A | 110 | 15 | 6015 | A | | | | | 6015 | A | |
| | WEST | 0 | 0 | N/A | N/A | 0 | 0 | N/A | N/A | | | | | N/A | N/A | |
| ***Twelfth Ave @ 34th St*** | NORTH | 0 | 0 | N/A | N/A | 0 | 0 | N/A | N/A | | | | 11 | N/A | N/A | |
| | EAST | 60 | 14 | 3301 | A | 60 | 14 | 19 | D | | | 20 | 48 | 35 | C | |
| | SOUTH | 120 | 15 | 6713 | A | 120 | 15 | 14 | E | Yes | | 17 | 11 | 8448 | A | |
| | WEST | 0 | 0 | N/A | N/A | 0 | 0 | N/A | N/A | | | | 48 | N/A | N/A | |
| ***Eleventh Ave @ 30th St*** | NORTH | 70 | 11 | 2527 | A | 70 | 11 | 19 | D | | | 39 | | 66 | B | |
| | EAST | 34 | 13 | 1642 | A | 34 | 13 | 103 | B | | | 20 | | 158 | A | |
| | SOUTH | 70 | 11 | 3370 | A | 70 | 11 | 215 | A | | | 17 | | 332 | A | |
| | WEST | 34 | 13 | 2190 | A | 34 | 13 | 47 | B | | | 20 | | 72 | B | |
| ***Eleventh Ave @ 33rd St*** | NORTH | 70 | 11 | 4147 | A | 70 | 11 | 10 | E | Yes | | 17 | | 15 | D | |
| | EAST | 34 | 13 | 1247 | A | 34 | 13 | 236 | A | | | 20 | | 363 | A | |
| | SOUTH | 70 | 11 | 4147 | A | 70 | 11 | 5 | F | Yes | | 39 | | 16 | D | |
| | WEST | 36 | 13 | 4578 | A | 0 | 0 | N/A | N/A | | | | | N/A | N/A | |
| ***Eleventh Ave @ 34th St*** | NORTH | 73 | 18 | 1506 | A | 73 | 18 | 50 | B | | | 20 | 30 | 61 | B | |
| | EAST | 59 | 12 | 946 | A | 59 | 12 | 16 | D | | | 20 | 30 | 17 | D | |
| | SOUTH | 71 | 18 | 1325 | A | 71 | 18 | 9 | E | Yes | | 20 | 30 | 12 | E | Yes |
| | WEST | 60 | 13 | 2075 | A | 60 | 13 | 18 | D | | | 20 | 30 | 18 | D | |
| ***Eleventh Ave @ 39th St*** | NORTH | 73 | 10 | 4200 | A | 73 | 10 | 4200 | A | | | 17 | | 7139 | A | |
| | EAST | 33 | 11 | 3182 | A | 33 | 11 | 707 | A | | | 20 | | 1286 | A | |
| | SOUTH | 76 | 12 | 1156 | A | 76 | 12 | 274 | A | | | 17 | | 388 | A | |
| | WEST | 36 | 13 | 623 | A | 0 | 0 | N/A | N/A | | | | | N/A | N/A | |
| ***Eleventh Ave @ 42nd St*** | NORTH | 70 | 15 | 129 | B | 70 | 15 | 83 | B | | | 17 | | 95 | B | |
| | EAST | 69 | 13 | 245 | A | 69 | 13 | 131 | A | | | 20 | | 202 | A | |
| | SOUTH | 71 | 15 | 211 | A | 71 | 15 | 105 | B | | | 17 | | 118 | B | |
| | WEST | 68 | 14 | 260 | A | 68 | 14 | 114 | B | | | 20 | | 163 | A | |
| ***Tenth Ave @ 30th St*** | NORTH | 71 | 14 | 1032 | A | 71 | 14 | 46 | B | | | 39 | | 128 | B | |
| | EAST | 35 | 16 | 551 | A | 35 | 16 | 268 | A | | | 20 | | 335 | A | |
| | SOUTH | 74 | 13 | 838 | A | 74 | 13 | 454 | A | | | 17 | | 594 | A | |
| | WEST | 35 | 18 | 349 | A | 35 | 18 | 155 | A | | | 20 | | 172 | A | |
| ***Tenth Ave @ 31st St*** | NORTH | 70 | 13 | 2085 | A | 70 | 13 | 20 | D | | | 17 | | 26 | C | |
| | EAST | 34 | 12 | 454 | A | 34 | 12 | 25 | C | | | 20 | 30 | 29 | C | |
| | SOUTH | 70 | 11 | 2205 | A | 70 | 11 | 85 | B | | | 17 | | 131 | A | |
| | WEST | 0 | 0 | N/A | N/A | 0 | 0 | N/A | N/A | | | | 30 | N/A | N/A | |
| ***Tenth Ave @ 33rd St*** | NORTH | 69 | 12 | 542 | A | 69 | 12 | 47 | B | | | 17 | 31 | 66 | B | |
| | EAST | 32 | 14 | 287 | A | 32 | 14 | 75 | B | | | 20 | 49 | 109 | B | |
| | SOUTH | 71 | 11 | 381 | A | 71 | 11 | 2 | F | Yes | | 39 | 31 | 9 | E | Yes |
| | WEST | 35 | 13 | 776 | A | 35 | 13 | 81 | B | | | 20 | 49 | 127 | B | |
| ***Tenth Ave @ 34th St*** | NORTH | 69 | 18 | 460 | A | 69 | 18 | 174 | A | | | | | 174 | A | |
| | EAST | 59 | 13 | 373 | A | 59 | 13 | 162 | A | | | 20 | | 249 | A | |
| | SOUTH | 68 | 18 | 220 | A | 68 | 18 | 54 | B | | | | | 54 | B | |
| | WEST | 59 | 13 | 946 | A | 59 | 13 | 192 | A | | | 20 | | 296 | A | |

# Appendix S.5.5

**Pedestrian Improvement Analysis - Crosswalk Level of Service**

**2025 Future Conditions (EVE)**

| Intersection | Crosswalk Location | 2025 Future without the Proposed Action | | | | 2025 Future with the Proposed Action | | | | | 2025 Future with the Proposed Action (Improvement) | | | | | |
|---|---|---|---|---|---|---|---|---|---|---|---|---|---|---|---|---|
| | | Crosswalk length (Curb-to-Curb | Crosswalk width | Pedestrian Space (s.f./ped.) | Surge Level of Service | Crosswalk length (Curb-to-Curb | Crosswalk width | Pedestrian Space (s.f./ped.) | Surge Level of Service | Impact? | Proposed Crosswalk length | Proposed Crosswalk width | Traffic Signal Timing Improvement | Pedestrian Space (s.f./ped.) | Surge Level of Service | Still Impact? |
| ***Ninth Ave @ 30th St*** | NORTH | 69 | 12 | 420 | A | 69 | 12 | 165 | A | | | 17 | | 240 | A | |
| | EAST | 36 | 14 | 132 | A | 36 | 14 | 87 | B | | | 20 | | 122 | B | |
| | SOUTH | 63 | 15 | 524 | A | 63 | 15 | 365 | A | | | 17 | | 411 | A | |
| | WEST | 98 | 15 | 546 | A | 98 | 15 | 186 | A | | | 20 | | 256 | A | |
| ***Ninth Ave @ 31st St*** | NORTH | 73 | 24 | 711 | A | 73 | 24 | 44 | B | | | | | 44 | B | |
| | EAST | 32 | 24 | 242 | A | 32 | 24 | 148 | A | | | | | 148 | A | |
| | SOUTH | 67 | 14 | 724 | A | 67 | 14 | 155 | A | | | 17 | | 188 | A | |
| | WEST | 36 | 13 | 233 | A | 36 | 13 | 58 | B | | | 20 | | 89 | B | |
| ***Ninth Ave @ 33rd St*** | NORTH | 68 | 13 | 233 | A | 68 | 13 | 25 | C | | | 17 | | 34 | C | |
| | EAST | 35 | 24 | 159 | A | 35 | 24 | 46 | B | | | | | 46 | B | |
| | SOUTH | 68 | 24 | 149 | A | 68 | 24 | 11 | E | Yes | | 46 | | 21 | D | |
| | WEST | 33 | 14 | 192 | A | 33 | 14 | 8 | E | Yes | | 20 | | 12 | E | Yes |
| ***Ninth Ave @ 34th St*** | NORTH | 69 | 20 | 156 | A | 69 | 20 | 50 | B | | | | 30 | 53 | B | |
| | EAST | 52 | 15 | 106 | B | 52 | 15 | 40 | B | | | 20 | 30 | 46 | B | |
| | SOUTH | 67 | 20 | 155 | A | 67 | 20 | 46 | B | | | | 30 | 49 | B | |
| | WEST | 61 | 15 | 256 | A | 61 | 15 | 23 | D | | | 20 | 30 | 27 | C | |
| ***Eighth Ave @ 30th St*** | NORTH | 69 | 12 | 354 | A | 69 | 12 | 163 | A | | | | | 163 | A | |
| | EAST | 31 | 13 | 58 | B | 31 | 13 | 44 | B | | | 20 | | 70 | B | |
| | SOUTH | 70 | 12 | 302 | A | 70 | 12 | 214 | A | | | | | 214 | A | |
| | WEST | 33 | 13 | 55 | B | 33 | 13 | 49 | B | | | 20 | | 78 | B | |
| ***Eighth Ave @ 31st St*** | NORTH | 70 | 24 | 131 | A | 70 | 24 | 64 | B | | | | | 64 | B | |
| | EAST | 42 | 15 | 42 | B | 42 | 15 | 32 | C | | | 20 | | 44 | B | |
| | SOUTH | 70 | 15 | 215 | A | 70 | 15 | 111 | B | | | | | 111 | B | |
| | WEST | 34 | 24 | 89 | B | 34 | 24 | 83 | B | | | | | 83 | B | |
| ***Eighth Ave @ 33rd St*** | NORTH | 66 | 15 | 65 | B | 66 | 15 | 31 | C | | | 17 | 30 | 29 | C | |
| | EAST | 32 | 20 | 20 | D | 32 | 20 | 18 | D | | | | 30 | 17 | D | |
| | SOUTH | 70 | 24 | 63 | B | 70 | 24 | 49 | B | | | 46 | 30 | 74 | B | |
| | WEST | 33 | 24 | 17 | D | 33 | 24 | 17 | D | | | | 30 | 16 | D | |
| ***Eighth Ave @ 34th St*** | NORTH | 67 | 20 | 75 | B | 67 | 20 | 62 | B | | | | 30 | 54 | B | |
| | EAST | 54 | 13 | 21 | D | 54 | 13 | 19 | D | | | 20 | 30 | 25 | C | |
| | SOUTH | 68 | 20 | 10 | E | 68 | 20 | 9 | E | Yes | | | 30 | 8 | E | Yes |
| | WEST | 54 | 13 | 45 | B | 54 | 13 | 41 | B | | | 20 | 30 | 54 | B | |
| ***Sixth Ave @ 34th St*** | NORTH | 156 | 21 | 75 | B | 156 | 21 | 75 | B | | | | | 75 | B | |
| | EAST | 54 | 15 | 35 | C | 54 | 15 | 35 | C | | | 20 | | 47 | B | |
| | SOUTH | 116 | 21 | 45 | B | 116 | 21 | 45 | B | | | | | 45 | B | |
| | WEST | 0 | 0 | N/A | N/A | 0 | 0 | N/A | N/A | | | | | N/A | N/A | |
| ***Broadway @ 34th St*** | NORTH | 156 | 21 | 53 | B | 156 | 21 | 53 | B | | | | | 53 | B | |
| | EAST | 0 | 0 | N/A | N/A | 0 | 0 | N/A | N/A | | | | | N/A | N/A | |
| | SOUTH | 116 | 21 | 45 | B | 116 | 21 | 45 | B | | | | | 45 | B | |
| | WEST | 54 | 28 | 59 | B | 54 | 28 | 59 | B | | | | | 59 | B | |
| ***Blvd @ 33rd St*** | NORTH | 0 | 0 | N/A | N/A | 30 | 25 | 21 | D | | | | | 21 | D | |
| | EAST | 0 | 0 | N/A | N/A | 35 | 20 | 121 | B | | | | | 121 | B | |
| | SOUTH | 0 | 0 | N/A | N/A | 0 | 0 | N/A | N/A | | | | | N/A | N/A | |
| | WEST | 0 | 0 | N/A | N/A | 35 | 20 | 34 | C | | | | | 34 | C | |

# Appendix S.5.5

**Pedestrian Improvement Analysis - Crosswalk Level of Service**

**2025 Future Conditions (EVE)**

| Intersection | Crosswalk Location | 2025 Future without the Proposed Action | | | | 2025 Future with the Proposed Action | | | | | 2025 Future with the Proposed Action (Improvement) | | | | | |
|---|---|---|---|---|---|---|---|---|---|---|---|---|---|---|---|---|
| | | Crosswalk length (Curb-to-Curb | Crosswalk width | Pedestrian Space (s.f./ped.) | Surge Level of Service | Crosswalk length (Curb-to-Curb | Crosswalk width | Pedestrian Space (s.f./ped.) | Surge Level of Service | Impact? | Proposed Crosswalk length | Proposed Crosswalk width | Traffic Signal Timing Improvement | Pedestrian Space (s.f./ped.) | Surge Level of Service | Still Impact? |
| ***Blvd @ 34th St*** | NORTH | 0 | 0 | N/A | N/A | 30 | 20 | 53 | B | | | | | 53 | B | |
| | EAST | 0 | 0 | N/A | N/A | 59 | 20 | 106 | B | | | | | 106 | B | |
| | SOUTH | 0 | 0 | N/A | N/A | 30 | 20 | 34 | C | | | | | 34 | C | |
| | WEST | 0 | 0 | N/A | N/A | 59 | 20 | 69 | B | | | | | 69 | B | |
| ***N.Blvd @ 35th St*** | NORTH | 0 | 0 | N/A | N/A | 30 | 20 | 101 | B | | | | | 101 | B | |
| | EAST | 0 | 0 | N/A | N/A | 34 | 20 | 102 | B | | | | | 102 | B | |
| | SOUTH | 0 | 0 | N/A | N/A | 30 | 20 | 38 | C | | | | | 38 | C | |
| | WEST | 0 | 0 | N/A | N/A | 0 | 0 | N/A | N/A | | | | | N/A | N/A | |
| ***N.Blvd @ 36th St*** | NORTH | 0 | 0 | N/A | N/A | 30 | 20 | 377 | A | | | | | 377 | A | |
| | EAST | 0 | 0 | N/A | N/A | 36 | 20 | 343 | A | | | | | 343 | A | |
| | SOUTH | 0 | 0 | N/A | N/A | 30 | 20 | 60 | B | | | | | 60 | B | |
| | WEST | 0 | 0 | N/A | N/A | 0 | 0 | N/A | N/A | | | | | N/A | N/A | |
| ***N.Blvd @ 37th St*** | NORTH | 0 | 0 | N/A | N/A | 30 | 20 | 363 | A | | | | | 363 | A | |
| | EAST | 0 | 0 | N/A | N/A | 36 | 20 | 260 | A | | | | | 260 | A | |
| | SOUTH | 0 | 0 | N/A | N/A | 30 | 20 | 887 | A | | | | | 887 | A | |
| | WEST | 0 | 0 | N/A | N/A | 0 | 0 | N/A | N/A | | | | | N/A | N/A | |
| ***Blvd @ 38th St*** | NORTH | 0 | 0 | N/A | N/A | 36 | 20 | 590 | A | | | | | 590 | A | |
| | EAST | 0 | 0 | N/A | N/A | 36 | 20 | 226 | A | | | | | 226 | A | |
| | SOUTH | 0 | 0 | N/A | N/A | 30 | 20 | 323 | A | | | | | 323 | A | |
| | WEST | 0 | 0 | N/A | N/A | 36 | 20 | 221 | A | | | | | 221 | A | |
| ***S.Blvd @ 35th St*** | NORTH | 0 | 0 | N/A | N/A | 30 | 20 | 86 | B | | | | | 86 | B | |
| | EAST | 0 | 0 | N/A | N/A | 0 | 0 | N/A | N/A | | | | | N/A | N/A | |
| | SOUTH | 0 | 0 | N/A | N/A | 0 | 0 | N/A | N/A | | | | | N/A | N/A | |
| | WEST | 0 | 0 | N/A | N/A | 37 | 20 | 38 | C | | | | | 38 | C | |
| ***S.Blvd @ 36th St*** | NORTH | 0 | 0 | N/A | N/A | 30 | 20 | 323 | A | | | | | 323 | A | |
| | EAST | 0 | 0 | N/A | N/A | 0 | 0 | N/A | N/A | | | | | N/A | N/A | |
| | SOUTH | 0 | 0 | N/A | N/A | 30 | 20 | 51 | B | | | | | 51 | B | |
| | WEST | 0 | 0 | N/A | N/A | 35 | 20 | 365 | A | | | | | 365 | A | |
| ***S.Blvd @ 37th St*** | NORTH | 0 | 0 | N/A | N/A | 30 | 20 | 363 | A | | | | | 363 | A | |
| | EAST | 0 | 0 | N/A | N/A | 0 | 0 | N/A | N/A | | | | | N/A | N/A | |
| | SOUTH | 0 | 0 | N/A | N/A | 30 | 20 | 887 | A | | | | | 887 | A | |
| | WEST | 0 | 0 | N/A | N/A | 36 | 20 | 298 | A | | | | | 298 | A | |

# Appendix S.5.5

**Pedestrian Improvement Analysis - Crosswalk Level of Service**

**2025 Future Conditions (SUN)**

| Intersection | Crosswalk Location | 2025 Future without the Proposed Action | | | | 2025 Future with the Proposed Action | | | | | 2025 Future with the Proposed Action (Improvement) | | | | | |
|---|---|---|---|---|---|---|---|---|---|---|---|---|---|---|---|---|
| | | Crosswalk length (Curb-to-Curb | Crosswalk width | Pedestrian Space (s.f./ped.) | Surge Level of Service | Crosswalk length (Curb-to-Curb | Crosswalk width | Pedestrian Space (s.f./ped.) | Surge Level of Service | Impact? | Proposed Crosswalk length | Proposed Crosswalk width | Signal Timing | Pedestrian Space (s.f./ped.) | Surge Level of Service | Still Impact? |
| ***Twelfth Ave @ 30th St*** | NORTH | 0 | 0 | N/A | N/A | 0 | 0 | N/A | N/A | | | | | N/A | N/A | |
| | EAST | 33 | 19 | 1336 | A | 33 | 19 | 1336 | A | | | | | 1336 | A | |
| | SOUTH | 110 | 15 | 6015 | A | 110 | 15 | 6015 | A | | | | | 6015 | A | |
| | WEST | 0 | 0 | N/A | N/A | 0 | 0 | N/A | N/A | | | | | N/A | N/A | |
| ***Twelfth Ave @ 34th St*** | NORTH | 0 | 0 | N/A | N/A | 0 | 0 | N/A | N/A | | | | 31 | N/A | N/A | |
| | EAST | 60 | 14 | 1238 | A | 60 | 14 | 16 | D | | | 20 | 53 | 21 | D | |
| | SOUTH | 120 | 15 | 110 | B | 120 | 15 | 11 | E | Yes | | 17 | 31 | 127 | B | |
| | WEST | 0 | 0 | N/A | N/A | 0 | 0 | N/A | N/A | | | | 53 | N/A | N/A | |
| ***Eleventh Ave @ 30th St*** | NORTH | 70 | 11 | 481 | A | 70 | 11 | 19 | D | | | 39 | | 66 | B | |
| | EAST | 34 | 13 | 263 | A | 34 | 13 | 30 | C | | | 20 | | 46 | B | |
| | SOUTH | 70 | 11 | 3370 | A | 70 | 11 | 98 | B | | | 17 | | 152 | A | |
| | WEST | 34 | 13 | 346 | A | 34 | 13 | 13 | E | Yes | | 20 | | 20 | D | |
| ***Eleventh Ave @ 33rd St*** | NORTH | 70 | 11 | 2765 | A | 70 | 11 | 14 | E | Yes | | 17 | | 22 | D | |
| | EAST | 34 | 13 | 224 | A | 34 | 13 | 20 | D | | | 20 | | 31 | C | |
| | SOUTH | 70 | 11 | 4147 | A | 70 | 11 | 3 | F | Yes | | 39 | | 12 | E | Yes |
| | WEST | 36 | 13 | 1831 | A | 0 | 0 | N/A | N/A | | | | | N/A | N/A | |
| ***Eleventh Ave @ 34th St*** | NORTH | 73 | 18 | 136 | A | 73 | 18 | 25 | C | | | 20 | 30 | 31 | C | |
| | EAST | 59 | 12 | 172 | A | 59 | 12 | 9 | E | Yes | | 20 | 30 | 10 | E | Yes |
| | SOUTH | 71 | 18 | 177 | A | 71 | 18 | 7 | E | Yes | | 20 | 30 | 9 | E | Yes |
| | WEST | 60 | 13 | 217 | A | 60 | 13 | 11 | E | Yes | | 20 | 30 | 11 | E | Yes |
| ***Eleventh Ave @ 39th St*** | NORTH | 73 | 10 | 764 | A | 73 | 10 | 135 | A | | | 17 | 50 | 304 | A | |
| | EAST | 33 | 11 | 2121 | A | 33 | 11 | 14 | E | Yes | | 20 | 30 | 19 | D | |
| | SOUTH | 76 | 12 | 103 | B | 76 | 12 | 56 | B | | | 17 | 50 | 105 | B | |
| | WEST | 36 | 13 | 386 | A | 0 | 0 | N/A | N/A | | | | 30 | N/A | N/A | |
| ***Eleventh Ave @ 42nd St*** | NORTH | 70 | 15 | 51 | B | 70 | 15 | 46 | B | | | 17 | 40 | 57 | B | |
| | EAST | 69 | 13 | 250 | A | 69 | 13 | 30 | C | | | 20 | 28 | 41 | B | |
| | SOUTH | 71 | 15 | 61 | B | 71 | 15 | 25 | C | | | 17 | 40 | 31 | C | |
| | WEST | 68 | 14 | 165 | A | 68 | 14 | 65 | B | | | 20 | 28 | 85 | B | |
| ***Tenth Ave @ 30th St*** | NORTH | 71 | 14 | 122 | B | 71 | 14 | 23 | D | | | 39 | | 65 | B | |
| | EAST | 35 | 16 | 150 | A | 35 | 16 | 70 | B | | | 20 | | 88 | B | |
| | SOUTH | 74 | 13 | 248 | A | 74 | 13 | 96 | B | | | 17 | | 125 | B | |
| | WEST | 35 | 18 | 89 | B | 35 | 18 | 29 | C | | | 20 | | 32 | C | |
| ***Tenth Ave @ 31st St*** | NORTH | 70 | 13 | 521 | A | 70 | 13 | 16 | D | | | 17 | | 21 | D | |
| | EAST | 34 | 12 | 91 | B | 34 | 12 | 17 | D | | | 20 | 30 | 20 | D | |
| | SOUTH | 70 | 11 | 4411 | A | 70 | 11 | 76 | B | | | 17 | | 118 | B | |
| | WEST | 0 | 0 | N/A | N/A | 0 | 0 | N/A | N/A | | | | 30 | N/A | N/A | |
| ***Tenth Ave @ 33rd St*** | NORTH | 69 | 12 | 168 | A | 69 | 12 | 26 | C | | | 17 | | 37 | C | |
| | EAST | 32 | 14 | 152 | A | 32 | 14 | 27 | C | | | 20 | | 38 | C | |
| | SOUTH | 71 | 11 | 89 | B | 71 | 11 | 2 | F | Yes | | 39 | | 8 | E | Yes |
| | WEST | 35 | 13 | 102 | B | 35 | 13 | 17 | D | | | 20 | | 26 | C | |
| ***Tenth Ave @ 34th St*** | NORTH | 69 | 18 | 111 | B | 69 | 18 | 52 | B | | | | | 52 | B | |
| | EAST | 59 | 13 | 251 | A | 59 | 13 | 47 | B | | | 20 | | 72 | B | |
| | SOUTH | 68 | 18 | 183 | A | 68 | 18 | 41 | B | | | | | 41 | B | |
| | WEST | 59 | 13 | 286 | A | 59 | 13 | 32 | C | | | 20 | | 50 | B | |

# Appendix S.5.5

**Pedestrian Improvement Analysis - Crosswalk Level of Service**

**2025 Future Conditions (SUN)**

| Intersection | Crosswalk Location | 2025 Future without the Proposed Action | | | | 2025 Future with the Proposed Action | | | | | 2025 Future with the Proposed Action (Improvement) | | | | | |
|---|---|---|---|---|---|---|---|---|---|---|---|---|---|---|---|---|
| | | Crosswalk length (Curb-to-Curb | Crosswalk width | Pedestrian Space (s.f./ped.) | Surge Level of Service | Crosswalk length (Curb-to-Curb | Crosswalk width | Pedestrian Space (s.f./ped.) | Surge Level of Service | Impact? | Proposed Crosswalk length | Proposed Crosswalk width | Signal Timing | Pedestrian Space (s.f./ped.) | Surge Level of Service | Still Impact? |
| ***Ninth Ave @ 30th St*** | NORTH | 69.3 | 11.7 | 89 | B | 69.3 | 11.7 | 36 | C | | | 17 | | 52 | B | |
| | EAST | 35.5 | 14.3 | 45 | B | 35.5 | 14.3 | 20 | D | | | 20 | | 29 | C | |
| | SOUTH | 63 | 15.1 | 91 | B | 63 | 15.1 | 48 | B | | | 17 | | 54 | B | |
| | WEST | 97.6 | 14.5 | 119 | B | 97.6 | 14.5 | 42 | B | | | 20 | | 58 | B | |
| ***Ninth Ave @ 31st St*** | NORTH | 73 | 24 | 112 | B | 73 | 24 | 28 | C | | | | | 28 | C | |
| | EAST | 32 | 24 | 47 | B | 32 | 24 | 32 | C | | | | | 32 | C | |
| | SOUTH | 67.2 | 14 | 143 | A | 67.2 | 14 | 51 | B | | | 17 | | 62 | B | |
| | WEST | 35.5 | 13 | 122 | B | 35.5 | 13 | 14 | E | Yes | | 20 | | 22 | D | |
| ***Ninth Ave @ 33rd St*** | NORTH | 68 | 12.5 | 96 | B | 68 | 12.5 | 20 | D | | | 17 | | 27 | C | |
| | EAST | 35.2 | 24 | 46 | B | 35.2 | 24 | 16 | D | | | | | 16 | D | |
| | SOUTH | 68.4 | 24 | 68 | B | 68.4 | 24 | 8 | E | Yes | | 46 | | 16 | D | |
| | WEST | 32.5 | 13.5 | 70 | B | 32.5 | 13.5 | 6 | E | Yes | | 20 | | 9 | E | Yes |
| ***Ninth Ave @ 34th St*** | NORTH | 69.3 | 20 | 66 | B | 69.3 | 20 | 39 | C | | | | 30 | 41 | B | |
| | EAST | 51.7 | 15 | 36 | C | 51.7 | 15 | 21 | D | | | 20 | 30 | 25 | C | |
| | SOUTH | 66.9 | 20 | 77 | B | 66.9 | 20 | 26 | C | | | | 30 | 27 | C | |
| | WEST | 60.5 | 15 | 198 | A | 60.5 | 15 | 19 | D | | | 20 | 30 | 23 | D | |
| ***Eighth Ave @ 30th St*** | NORTH | 69.2 | 12 | 152 | A | 69.2 | 12 | 59 | B | | | | | 59 | B | |
| | EAST | 31.3 | 12.6 | 39 | C | 31.3 | 12.6 | 19 | D | | | 20 | | 31 | C | |
| | SOUTH | 70.1 | 11.5 | 206 | A | 70.1 | 11.5 | 74 | B | | | | | 74 | B | |
| | WEST | 32.9 | 12.5 | 37 | C | 32.9 | 12.5 | 29 | C | | | 20 | | 47 | B | |
| ***Eighth Ave @ 31st St*** | NORTH | 70 | 24 | 98 | B | 70 | 24 | 50 | B | | | | | 50 | B | |
| | EAST | 42 | 14.5 | 40 | B | 42 | 14.5 | 21 | D | | | 20 | | 29 | C | |
| | SOUTH | 70 | 14.5 | 135 | A | 70 | 14.5 | 69 | B | | | | | 69 | B | |
| | WEST | 34 | 24 | 57 | B | 34 | 24 | 47 | B | | | | | 47 | B | |
| ***Eighth Ave @ 33rd St*** | NORTH | 66.4 | 14.5 | 45 | B | 66.4 | 14.5 | 24 | C | | | 17 | 30 | 25 | C | |
| | EAST | 31.7 | 20 | 21 | D | 31.7 | 20 | 14 | E | Yes | | | 30 | 12 | E | Yes |
| | SOUTH | 70.2 | 24 | 47 | B | 70.2 | 24 | 35 | C | | | 46 | 30 | 58 | B | |
| | WEST | 32.5 | 24 | 22 | D | 32.5 | 24 | 20 | D | | | | 30 | 17 | D | |
| ***Eighth Ave @ 34th St*** | NORTH | 66.8 | 20 | 36 | C | 66.8 | 20 | 32 | C | | | | 30 | 28 | C | |
| | EAST | 53.5 | 13 | 29 | C | 53.5 | 13 | 20 | D | | | 20 | 30 | 26 | C | |
| | SOUTH | 67.7 | 20 | 32 | C | 67.7 | 20 | 22 | D | | | | 30 | 19 | D | |
| | WEST | 54.3 | 13 | 21 | D | 54.3 | 13 | 18 | D | | | 20 | 30 | 25 | C | |
| ***Sixth Ave @ 34th St*** | NORTH | 156 | 21 | 38 | C | 156 | 21 | 37 | C | | | | 28 | 37 | C | |
| | EAST | 54 | 15 | 19 | D | 54 | 15 | 18 | D | | | 20 | 52 | 24 | C | |
| | SOUTH | 116 | 21 | 25 | C | 116 | 21 | 25 | C | | | | 28 | 25 | C | |
| | WEST | 0 | 0 | N/A | N/A | 0 | 0 | N/A | N/A | | | | 52 | N/A | N/A | |
| ***Broadway @ 34th St*** | NORTH | 156 | 21 | 37 | C | 156 | 21 | 36 | C | | | | 28 | 37 | C | |
| | EAST | 0 | 0 | N/A | N/A | 0 | 0 | N/A | N/A | | | | 52 | N/A | N/A | |
| | SOUTH | 116 | 21 | 39 | C | 116 | 21 | 37 | C | | | | 28 | 38 | C | |
| | WEST | 54 | 28 | 47 | B | 54 | 28 | 45 | B | | | | 52 | 44 | B | |
| ***Blvd @ 33rd St*** | NORTH | 0 | 0 | N/A | N/A | 30 | 25 | 18 | D | | | | 45 | 18 | D | |
| | EAST | 0 | 0 | N/A | N/A | 35 | 20 | 19 | D | | | | 45 | 19 | D | |
| | SOUTH | 0 | 0 | N/A | N/A | 0 | 0 | N/A | N/A | | | | | N/A | N/A | |
| | WEST | 0 | 0 | N/A | N/A | 35 | 20 | 22 | D | | | | 45 | 22 | D | |

# Appendix S.5.5

**Pedestrian Improvement Analysis - Crosswalk Level of Service**

**2025 Future Conditions (SUN)**

| Intersection | Crosswalk Location | 2025 Future without the Proposed Action | | | | 2025 Future with the Proposed Action | | | | | 2025 Future with the Proposed Action (Improvement) | | | | | |
|---|---|---|---|---|---|---|---|---|---|---|---|---|---|---|---|---|
| | | Crosswalk length (Curb-to-Curb | Crosswalk width | Pedestrian Space (s.f./ped.) | Surge Level of Service | Crosswalk length (Curb-to-Curb | Crosswalk width | Pedestrian Space (s.f./ped.) | Surge Level of Service | Impact? | Proposed Crosswalk length | Proposed Crosswalk width | Signal Timing | Pedestrian Space (s.f./ped.) | Surge Level of Service | Still Impact? |
| ***Blvd @ 34th St*** | NORTH | 0 | 0 | N/A | N/A | 30 | 20 | 23 | D | | | | | 23 | D | |
| | EAST | 0 | 0 | N/A | N/A | 59 | 20 | 65 | B | | | | | 65 | B | |
| | SOUTH | 0 | 0 | N/A | N/A | 30 | 20 | 27 | C | | | | | 27 | C | |
| | WEST | 0 | 0 | N/A | N/A | 59 | 20 | 55 | B | | | | | 55 | B | |
| ***N.Blvd @ 35th St*** | NORTH | 0 | 0 | N/A | N/A | 30 | 20 | 39 | C | | | | | 39 | C | |
| | EAST | 0 | 0 | N/A | N/A | 34 | 20 | 37 | C | | | | | 37 | C | |
| | SOUTH | 0 | 0 | N/A | N/A | 30 | 20 | 24 | C | | | | | 24 | C | |
| | WEST | 0 | 0 | N/A | N/A | 0 | 0 | N/A | N/A | | | | | N/A | N/A | |
| ***N.Blvd @ 36th St*** | NORTH | 0 | 0 | N/A | N/A | 30 | 20 | 57 | B | | | | | 57 | B | |
| | EAST | 0 | 0 | N/A | N/A | 36 | 20 | 46 | B | | | | | 46 | B | |
| | SOUTH | 0 | 0 | N/A | N/A | 30 | 20 | 33 | C | | | | | 33 | C | |
| | WEST | 0 | 0 | N/A | N/A | 0 | 0 | N/A | N/A | | | | | N/A | N/A | |
| ***N.Blvd @ 37th St*** | NORTH | 0 | 0 | N/A | N/A | 30 | 20 | 41 | B | | | | | 41 | B | |
| | EAST | 0 | 0 | N/A | N/A | 36 | 20 | 44 | B | | | | | 44 | B | |
| | SOUTH | 0 | 0 | N/A | N/A | 30 | 20 | 72 | B | | | | | 72 | B | |
| | WEST | 0 | 0 | N/A | N/A | 0 | 0 | N/A | N/A | | | | | N/A | N/A | |
| ***Blvd @ 38th St*** | NORTH | 0 | 0 | N/A | N/A | 36 | 20 | 66 | B | | | | | 66 | B | |
| | EAST | 0 | 0 | N/A | N/A | 36 | 20 | 44 | B | | | | | 44 | B | |
| | SOUTH | 0 | 0 | N/A | N/A | 30 | 20 | 61 | B | | | | | 61 | B | |
| | WEST | 0 | 0 | N/A | N/A | 36 | 20 | 42 | B | | | | | 42 | B | |
| ***S.Blvd @ 35th St*** | NORTH | 0 | 0 | N/A | N/A | 30 | 20 | 33 | C | | | | | 33 | C | |
| | EAST | 0 | 0 | N/A | N/A | 0 | 0 | N/A | N/A | | | | | N/A | N/A | |
| | SOUTH | 0 | 0 | N/A | N/A | 0 | 0 | N/A | N/A | | | | | N/A | N/A | |
| | WEST | 0 | 0 | N/A | N/A | 37 | 20 | 40 | B | | | | | 40 | B | |
| ***S.Blvd @ 36th St*** | NORTH | 0 | 0 | N/A | N/A | 30 | 20 | 49 | B | | | | | 49 | B | |
| | EAST | 0 | 0 | N/A | N/A | 0 | 0 | N/A | N/A | | | | | N/A | N/A | |
| | SOUTH | 0 | 0 | N/A | N/A | 30 | 20 | 28 | C | | | | | 28 | C | |
| | WEST | 0 | 0 | N/A | N/A | 35 | 20 | 51 | B | | | | | 51 | B | |
| ***S.Blvd @ 37th St*** | NORTH | 0 | 0 | N/A | N/A | 30 | 20 | 41 | B | | | | | 41 | B | |
| | EAST | 0 | 0 | N/A | N/A | 0 | 0 | N/A | N/A | | | | | N/A | N/A | |
| | SOUTH | 0 | 0 | N/A | N/A | 30 | 20 | 72 | B | | | | | 72 | B | |
| | WEST | 0 | 0 | N/A | N/A | 36 | 20 | 47 | B | | | | | 47 | B | |